ALABAMA A&M UNIVERSITY

PHASE II ROAD IMPROVEMENTS, PAVING AND PARKING LOT REPAIRS

SECTION 18, TOWNSHIP 3 SOUTH, RANGE 1 EAST, HUNTSVILLE MERIDIAN

4900 MERIDIAN STREET
HUNTSVILLE, ALABAMA 35811

NOTICE TO CONTRACTOR(S)

ALL EVIDENT EXISTING UTILITIES ARE SHOWN. HOWEVER, IT IS THE CONTRACTOR'S RESPONSIBILITY TO FIELD VERIFY EXACT SIZES AND LOCATIONS OF ALL EXISTING UTILITIES BEFORE INITIATING ANY CONSTRUCTION OPERATIONS. ANY EXISTING STRUCTURE, PIPING OR UTILITY DISTURBED OR DAMAGED BY THE CONTRACTOR DURING CONSTRUCTION OPERATIONS SHALL BE REPLACED BY THE CONTRACTOR AT NO ADDITIONAL COST TO THE OWNER AND/OR ENGINEER. THE CONTRACTOR SHALL CALL:

ALABAMA LINE LOCATION CENTER	1-800-292-8525
HUNTSVILLE UTILITIES	256-535-1200
WATER DEPT. - P.O.C: HERCY GOLSON, WATER ENGINEERING SUPERVISOR	256-535-1200
ELECTRIC DEPT. - P.O.C.: CHRIS WELLS, AREA REPRESENTATIVE	256-535-1200
GAS DEPARTMENT P.O.C.: JOEL PERRY	256-535-1200
CITY OF HUNTSVILLE WATER POLLUTION CONTROL - P.O.C.: SHANE COOK	256-883-3719
AT&T CHRIS SMITH P.O.C	256-890-3700

TWO (2) DAYS BEFORE ANY EXCAVATION ON THIS PROJECT.

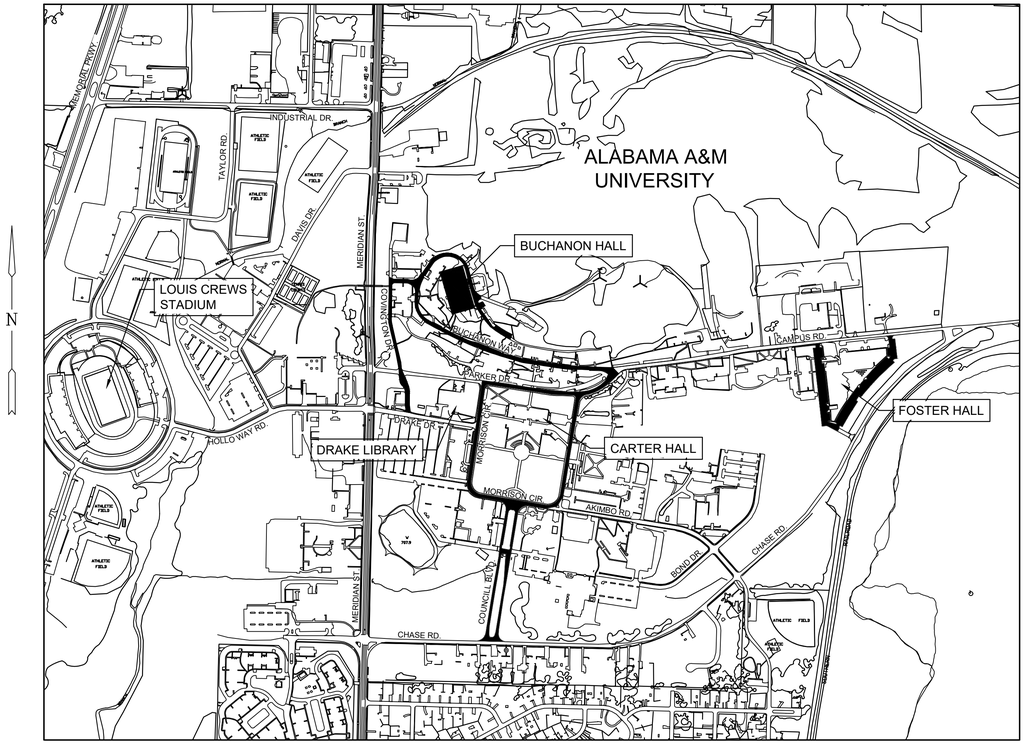

VICINITY MAP
SCALE: 1" = 500'

OWNER
ALABAMA A&M UNIVERSITY
4900 MERIDIAN STREET
HUNTSVILLE, ALABAMA 35811
P.O.C.: JERRY H. LATHAM (PROJECT MANAGER)
TELEPHONE: 256-372-4871
EMAIL: jerry.latham1@aamu.edu

GENERAL CONTRACTOR
TBD
xxx
xxx
P.O.C.:
TELEPHONE:
EMAIL:

SURVEYOR/CIVIL ENGINEER
JOHNSON AND ASSOCIATES, INC.
1218 CHURCH STREET
HUNTSVILLE, ALABAMA 35801
P.O.C.: NATHAN G. JOHNSON, P.E., PLS
TELEPHONE: 256-533-7331
FAX: 256-533-7332
EMAIL: ngj@hiwaay.net

ARCHITECT
CHARLES WILLIAMS & ASSOCIATES INC.
3601 8TH AVENUE SOUTH
BIRMINGHAM, ALABAMA 35222
P.O.C.: CHARLES WILLIAMS, AIA
TELEPHONE: 205-250-0700
EMAIL: charles2@cwilliams-arch.com

811 Know what's **below.** **Call** before you dig.

SHEET INDEX

NO.	DESCRIPTION	REV NO.	DATE
C0.0	COVER SHEET	0	2/14/2022
C1.1	TOPOGRAPHIC SURVEY	0	9/2/2021
C1.2	TOPOGRAPHIC SURVEY	0	9/2/2021
C1.3	TOPOGRAPHIC SURVEY	0	9/2/2021
C1.4	TOPOGRAPHIC SURVEY	0	9/2/2021
C1.5	TOPOGRAPHIC SURVEY	0	9/2/2021
C1.6	TOPOGRAPHIC SURVEY	0	9/2/2021
C1.7	TOPOGRAPHIC SURVEY	0	9/2/2021
C1.8	TOPOGRAPHIC SURVEY	0	9/2/2021
C2.1	DEMOLITION PLAN-BUCHANAN WAY 1	0	2/14/2022
C2.2	DEMOLITION PLAN-BUCHANAN WAY 2	0	2/14/2022
C2.3	DEMOLITION PLAN-BUCHANAN WAY 3	0	2/14/2022
C2.4	DEMOLITION PLAN-COVINGTON DRIVE 1	0	2/14/2022
C2.5	DEMOLITION PLAN-PARKER DRIVE	0	2/14/2022
C2.6	DEMOLITION PLAN-PARKER DR. TO MORRSION CIR.	0	2/14/2022
C2.7	DEMOLITION PLAN-MORRISON CIRCLE	0	2/14/2022
C2.8	DEMOLITION PLAN-COUNCILL BOULEVARD	0	2/14/2022
C2.9	DEMOLITION PLAN-FOSTER DRIVE	0	2/14/2022
C3.1	LAYOUT PLAN-BUCHANAN WAY 1	0	2/14/2022
C3.2	LAYOUT PLAN-BUCHANAN WAY 2	0	2/14/2022
C3.3	LAYOUT PLAN-BUCHANAN WAY 3	0	2/14/2022
C3.4	LAYOUT PLAN-COVINGTON DRIVE	0	2/14/2022
C3.5	LAYOUT PLAN-PARKER DRIVE	0	2/14/2022
C3.6	LAYOUT PLAN-PARKER DR. TO MORRSION CIR.	0	2/14/2022
C3.7	LAYOUT PLAN-MORRISON CIRCLE	0	2/14/2022
C3.8	LAYOUT PLAN-COUNCILL BOULEVARD	0	2/14/2022
C3.9	LAYOUT PLAN-FOSTER DRIVE	0	2/14/2022
C4.1	GRADING AND DRAINAGE PLAN-BUCHANAN WAY	0	2/14/2022
C4.2	GRADING AND DRAINAGE PLAN-COUNCILL BOULEVARD	0	2/14/2022
C4.3	GRADING AND DRAINAGE PLAN-PARKING LOT	0	2/14/2022
C4.4	STORM PLAN & RETAINING WALL PROFILES	0	2/14/2022
C5.1	EROSION CONTROL PLAN-BUCHANAN WAY 1	0	2/14/2022
C5.2	EROSION CONTROL PLAN-BUCHANAN WAY 2	0	2/14/2022
C5.3	EROSION CONTROL PLAN-BUCHANAN WAY 3	0	2/14/2022
C5.4	EROSION CONTROL PLAN-COVINGTON DRIVE	0	2/14/2022
C5.5	EROSION CONTROL PLAN-PARKER DRIVE	0	2/14/2022
C5.6	EROSION CONTROL PLAN-PARKER DR. TO MORRSION CIR.	0	2/14/2022
C5.7	EROSION CONTROL PLAN-MORRISON CIRCLE	0	2/14/2022
C5.8	EROSION CONTROL PLAN-COUNCILL BOULEVARD	0	2/14/2022
C5.9	EROSION CONTROL PLAN-FOSTER DRIVE	0	2/14/2022
C6.1	UTILITY PLAN- NEW PARKING LOT	0	2/14/2022
C8.1	CONSTRUCTION DETAILS	0	2/14/2022
C8.2	CONSTRUCTION DETAILS	0	2/14/2022
C8.3	CONSTRUCTION DETAILS	0	2/14/2022
C8.4	CONSTRUCTION DETAILS	0	2/14/2022
C8.5	CONSTRUCTION DETAILS	0	2/14/2022
C8.6	CONSTRUCTION DETAILS	0	2/14/2022
C8.7	CONSTRUCTION DETAILS	0	2/14/2022
C8.8	CONSTRUCTION DETAILS	0	2/14/2022

THE TERM "CERTIFICATION" SHALL MEAN A STATEMENT SIGNED AND SEALED BY A PROFESSIONAL ENGINEER OR PROFESSIONAL LAND SURVEYOR REPRESENTING THAT THE ENGINEERING OR LAND SURVEYING SERVICES ADDRESSED THEREIN, AS DEFINED IN SECTION 34-11-1, CODE OF ALABAMA 1975, HAVE BEEN PERFORMED BY THE PROFESSIONAL ENGINEER OR LAND SURVEYOR BASED ON KNOWLEDGE AND INFORMATION IN ACCORDANCE WITH COMMONLY ACCEPTED PROCEDURES CONSISTENT WITH APPLICABLE STANDARDS OR PRACTICE, AND IS NOT A GUARANTY OR WARRANTY EITHER EXPRESSED OR IMPLIED.

JOHNSON & ASSOCIATES ENGINEERING SURVEYING
1218 CHURCH STREET HUNTSVILLE, ALABAMA 35801 1-256-533-7331 FAX 1-256-533-7332

STATE OF ALABAMA CHARLES E. WILLIAMS NO. 2925 REGISTERED ARCHITECTS

REVISIONS

no.	date	description

ALABAMA NO. 10165 PROFESSIONAL ENGINEER STEPHEN L. WALKER 02/14/2022 SEAL

PHASE II - ROAD IMPROVEMENTS, PARKING LOT REPAIRS
ALABAMA A&M UNIVERSITY

Charles Williams & Associates, Inc ARCHITECTS
cwa
3601 8TH AVE. SOUTH
BIRMINGHAM, ALABAMA 35222
PH: 205-250-0700
FAX: 205-250-0515

SHEET TITLE: COVER SHEET
PROJECT NUMBER: CWA 2019-06B JA 1791EN
DATE: 02-14-2022
DRAWN BY: ATC/RDH
CHECKED BY: SW/ATC

SHEET NUMBER C0.0

SURVEYOR'S NOTES

1.) ALL UTILITIES SHOWN HEREON ARE APPROXIMATE AND HAVE BEEN LOCATED BASED ON SURFACE EVIDENCE; EXISTING UTILITY MAPS; AND/OR FIELD LOCATIONS BY THE RESPECTIVE UTILITY COMPANIES OR THEIR REPRESENTATIVE. THIS SURVEY DOES NOT REFLECT THE PRESENCE OF ALL UNDERGROUND UTILITIES. ALL UNDERGROUND UTILITIES NEED TO BE VERIFIED BY THE CONTRACTOR BEFORE CONSTRUCTION.

2.) THERE WAS NO FIELD LOCATION ATTEMPTED TO DETERMINE THE EXTENT OF SUB-SURFACE STRUCTURES OR EAVE OVERHANGS, EXCEPT AS SHOWN.

3.) VERTICAL RELIEF INFORMATION WAS OBTAINED BASED ON FIELD MEASUREMENTS AND GPS OBSERVATION DATA, USING THE NAVD 1988.

4.) THIS PARCEL WAS ZONED RP (RESEARCH PARK DISTRICT) AT THE TIME OF THIS SURVEY.

5.) LAND SURVEYORS, AS LICENSED PROFESSIONALS BY THE STATE OF ALABAMA, ARE NOT EXPERTS IN THE IDENTIFICATION OF WETLANDS, CEMETERIES OR BURIAL GROUNDS, ITEMS OF HISTORICAL OR CULTURAL SIGNIFICANCE, OR THE IDENTIFICATION OF ENVIRONMENTAL HAZARDS OR HAZARDOUS WASTE; NOR HAS ANY EVIDENCE OR DOCUMENTATION OF SAID AFOREMENTIONED ITEMS BEEN PROVIDED TO THE SURVEYOR. THEREFORE EXCEPTION IS TAKEN TO ANY SUCH MATTERS WHICH MAY EXIST ON THE SUBJECT PROPERTY.

6.) ALL BUILDINGS SHOWN HEREON ARE NOT FIELD COLLECTED AND THE CITY OF HUNTSVILLE GIS INFORMATION IS USED TO SHOW BUILDINGS.

7.) THERE IS SOME PLANIMETRIC INFORMATION SHOWN FROM CITY OF HUNTSVILLE GIS AND IS FOR INFORMATION PURPOSE ONLY.

GRID NORTH

−15 0 15 30 60

SCALE IN FEET
1" = 30'

THE NORTH ARROW IS BASED ON GRID NORTH AS DEFINED BY THE STATE PLANE COORDINATE SYSTEM, ALABAMA EAST ZONE, NAD 1983; (DETERMINED BY GPS OBSERVATIONS)

VICINITY MAP



(NOT TO SCALE)

LEGEND

FENCE LINE	—X—X—X—	TELEPHONE RISER	T	FINISH FLOOR ELEVATION	FFE
EDGE OF PAVEMENT	—— EP ——	UNDERGROUND COM MARKER		RIGHT-OF-WAY	R.O.W
BACK OF CURB	—— BC ——	SANITARY SEWER MANHOLE	S	BENCHMARK	
OVERHEAD ELECTRIC	—— OHE ——	SANITARY CLEANOUT	CO	CONCRETE MONUMENT FOUND	
UNDERGROUND ELECTRIC	—— UGE ——	STORM SEWER MANHOLE		PROPERTY CORNER FOUND	
SANITARY SEWER	—— SS ——	OPEN THROAT INLET		PROPERTY CORNER SET 1/2-INCH REBAR SET WITH YELLOW CAP STAMPED "JOHNSON CA-0193LS"	
GAS LINE	—— GAS ——	DOUBLE WING CURB INLET		CONIFEROUS TREE	
CENTERLINE	—— CL ——	SINGLE WING CURB INLET		DECIDUOUS TREE	
WATER LINE	—— W ——	GRATE INLET		EXISTING CONTOURS	795
FIBER OPTIC CABLE	—— FOC ——	FLOW ARROW		SPOT ELEVATION	x 728.5EX
COMMUNICATION	—— COM ——	GAS VALVE		UTILITY & DRAINAGE EASEMENT	U & D
STORM SEWER LINE		STUB PIPE		GRAVEL	
TREE LINE		AIR CONDITIONER		CONCRETE	
UTILITY POLE		SIGN		RIP-RAP	
LIGHT POLE		LOT NUMBER	1		
GUY WIRE		REINFORCED CONC. PIPE	RCP		
ELECTRICAL CABINET	E	POLYVINYL CHLORIDE	PVC		
LANDSCAPE LIGHT		REGULAR PARKING SPACES	10		
TRANSFORMER		HANDICAP PARKING SPACES	10		
WATER VALVE		MEASURED	(M)		
WATER METER	W	RECORD	(R)		
IRRIGATION VALVE		DEED	(D)		
FIRE HYDRANT		PLAT	(P)		

FLOOD INFORMATION

I HAVE CONSULTED THE FEDERAL INSURANCE ADMINISTRATION FLOOD INSURANCE RATE MAPS PREPARED BY THE FEDERAL EMERGENCY MANAGEMENT AGENCY, IN COOPERATION WITH THE NATIONAL FEDERAL INSURANCE ADMINISTRATION, MAP NUMBERS 01089C0187 E, DATED OCTOBER 02, 2014, 01089C0195 E, DATED OCTOBER 02, 2014, AND 01089C0189 F, DATED AUGUST 16, 2018 AND FOUND THAT THE SITE AREAS SHOWN HEREON ARE LOCATED IN FLOOD HAZARD ZONE(S) "X" (OUTSIDE ANY FLOOD HAZARD ZONE). THIS DETERMINATION HAS NOT BEEN VERIFIED WITH FIELD DATA, BUT MAP OVERLAYS ONLY.

CERTIFICATE OF ACCURACY

THE ACCURACY OF THE MEASUREMENTS HAS BEEN SUBSTANTIATED BY THE COMPUTATION OF A CLOSED FIELD TRAVERSE, AND THE RELATIVE ERROR OF CLOSURE WAS NOT GREATER THAN 1:10,000.

SURVEYOR'S CERTIFICATE

I, NATHAN G. JOHNSON, A REGISTERED LAND SURVEYOR, WITH THE FIRM OF JOHNSON AND ASSOCIATES, INC., HUNTSVILLE, ALABAMA HEREBY CERTIFY THAT ALL PARTS OF THIS SURVEY AND DRAWING HAVE BEEN COMPLETED IN ACCORDANCE WITH THE CURRENT REQUIREMENTS OF THE STANDARDS OF PRACTICE FOR SURVEYING IN THE STATE OF ALABAMA AS ADOPTED BY THE ALABAMA SOCIETY OF PROFESSIONAL LAND SURVEYORS.

ACCORDING TO THIS SURVEY, UNDER MY SUPERVISION.

Nathan G. Johnson, AL PLS #16690
njohnson@jaengineering.com

ALABAMA LICENSED 09/02/2021 No. 16690 PROFESSIONAL LAND SURVEYOR NATHAN G. JOHNSON

JOHNSON & ASSOCIATES
ENGINEERING SURVEYING
1218 CHURCH STREET
HUNTSVILLE, ALABAMA 35801
1-256-533-7331
FAX 1-256-533-7332

REVISIONS		
no.	date	description

ALABAMA LICENSED No. 16690 PROFESSIONAL LAND SURVEYOR NATHAN G. JOHNSON 09/02/2021 SEAL

PHASE II - ROAD IMPROVEMENTS, PARKING LOT REPAIRS

ALABAMA A&M UNIVERSITY

Charles Williams & Associates, Inc
ARCHITECTS
3601 8TH AVE. SOUTH
BIRMINGHAM, ALABAMA 35222
PH: 205-250-0700
FAX: 205-250-0515

SHEET TITLE:
TOPOGRAPHIC SURVEY
OF BUCHANAN WAY 1 & PARKER DR

PROJECT NUMBER:
CWA 2019-06B JA 1791EN

DATE:
2.14.22

DRAWN BY:
ATC

CHECKED BY:
NGJ

SHEET NUMBER
C1.1

VICINITY MAP

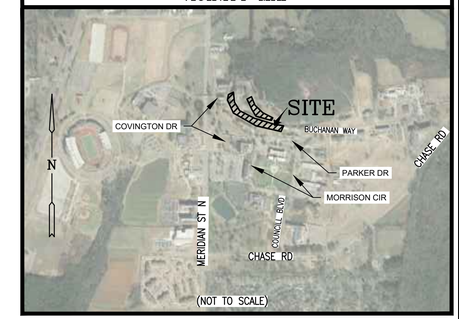

(NOT TO SCALE)

CERTIFICATE OF ACCURACY

THE ACCURACY OF THE MEASUREMENTS HAS BEEN SUBSTANTIATED BY THE COMPUTATION OF A CLOSED FIELD TRAVERSE, AND THE RELATIVE ERROR OF CLOSURE WAS NOT GREATER THAN 1:10,000.

GRID NORTH N

−15 0 15 30 60

SCALE IN FEET
1" = 30'

THE NORTH ARROW IS BASED ON GRID NORTH AS DEFINED BY THE STATE PLANE COORDINATE SYSTEM, ALABAMA EAST ZONE, NAD 1983; (DETERMINED BY GPS OBSERVATIONS)

LEGEND

FENCE LINE	—X—X—X—
EDGE OF PAVEMENT	— EP —
BACK OF CURB	— BC —
OVERHEAD ELECTRIC	— OHE —
UNDERGROUND ELECTRIC	— UGE —
SANITARY SEWER	— SS —
GAS LINE	— GAS —
CENTERLINE	— CL —
WATER LINE	— W —
FIBER OPTIC CABLE	— FOC —
COMMUNICATION	— COM —
STORM SEWER LINE	
TREE LINE	
UTILITY POLE	
LIGHT POLE	
GUY WIRE	
ELECTRICAL CABINET	E
LANDSCAPE LIGHT	
TRANSFORMER	
WATER VALVE	
WATER METER	
IRRIGATION VALVE	
FIRE HYDRANT	
TELEPHONE RISER	
UNDERGROUND COM MARKER	
SANITARY SEWER MANHOLE	
SANITARY CLEANOUT	CO
STORM SEWER MANHOLE	
OPEN THROAT INLET	
DOUBLE WING CURB INLET	
SINGLE WING CURB INLET	
GRATE INLET	
FLOW ARROW	
GAS VALVE	
STUB PIPE	
AIR CONDITIONER	
SIGN	
LOT NUMBER	(1)
REINFORCED CONC. PIPE	RCP
POLYVINYL CHLORIDE	PVC
REGULAR PARKING SPACES	(10)
HANDICAP PARKING SPACES	(1)
MEASURED	(M)
RECORD	(R)
DEED	(D)
PLAT	(P)
FINISH FLOOR ELEVATION	FFE
RIGHT-OF-WAY	R.O.W
BENCHMARK	
CONCRETE MONUMENT FOUND	
PROPERTY CORNER FOUND	
PROPERTY CORNER SET 1/2-INCH REBAR SET WITH YELLOW CAP STAMPED "JOHNSON CA-0193LS"	
CONIFEROUS TREE	
DECIDUOUS TREE	
EXISTING CONTOURS	795
SPOT ELEVATION	x 728.5EX
UTILITY & DRAINAGE EASEMENT	U & D
GRAVEL	
CONCRETE	
RIP-RAP	

REVISIONS

no.	date	description

ALABAMA LICENSED
No. 16897
PROFESSIONAL
LAND SURVEYOR
NATHAN G. JOHNSON
09/02/2021
SEAL

PHASE II - ROAD IMPROVEMENTS, PARKING LOT REPAIRS
ALABAMA A&M UNIVERSITY

Charles Williams & Associates, Inc
ARCHITECTS
3601 8TH AVE. SOUTH
BIRMINGHAM, ALABAMA 35222
PH: 205-250-0700
FAX: 205-250-0515

SHEET TITLE:
TOPOGRAPHIC SURVEY OF BUCHANAN WAY 2

PROJECT NUMBER:
CWA 2019-06B JA 1791EN

DATE:
2.14.22

DRAWN BY:
ATC

CHECKED BY:
NGJ

SHEET NUMBER
C1.2

JOHNSON & ASSOCIATES
ENGINEERING SURVEYING
1218 CHURCH STREET
HUNTSVILLE, ALABAMA 35801
1-256-533-7331
FAX 1-256-533-7332

VICINITY MAP

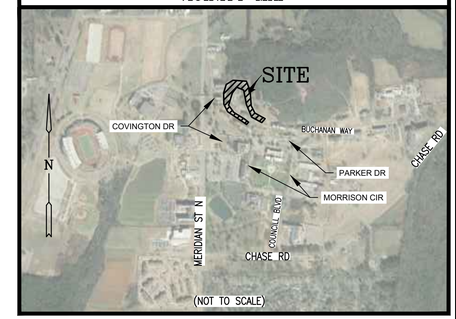

CERTIFICATE OF ACCURACY

THE ACCURACY OF THE MEASUREMENTS HAS BEEN SUBSTANTIATED BY THE COMPUTATION OF A CLOSED FIELD TRAVERSE, AND THE RELATIVE ERROR OF CLOSURE WAS NOT GREATER THAN 1:10,000.

GRID NORTH N

−15 0 15 30 60
SCALE IN FEET
1" = 30'

THE NORTH ARROW IS BASED ON GRID NORTH AS DEFINED BY THE STATE PLANE COORDINATE SYSTEM, ALABAMA EAST ZONE, NAD 1983; (DETERMINED BY GPS OBSERVATIONS)

LEGEND

FENCE LINE	—X—X—X—
EDGE OF PAVEMENT	— EP —
BACK OF CURB	— BC —
OVERHEAD ELECTRIC	— OHE —
UNDERGROUND ELECTRIC	— UGE —
SANITARY SEWER	— SS —
GAS LINE	— GAS —
CENTERLINE	— CL —
WATER LINE	— W —
FIBER OPTIC CABLE	— FOC —
COMMUNICATION	— COM —
STORM SEWER LINE	
TREE LINE	
UTILITY POLE	
LIGHT POLE	
GUY WIRE	
ELECTRICAL CABINET	E
LANDSCAPE LIGHT	
TRANSFORMER	
WATER VALVE	
WATER METER	
IRRIGATION VALVE	
FIRE HYDRANT	
TELEPHONE RISER	
UNDERGROUND COM MARKER	
SANITARY SEWER MANHOLE	
SANITARY CLEANOUT	CO
STORM SEWER MANHOLE	
OPEN THROAT INLET	
DOUBLE WING CURB INLET	
SINGLE WING CURB INLET	
GRATE INLET	
FLOW ARROW	
GAS VALVE	
STUB PIPE	
AIR CONDITIONER	
SIGN	
LOT NUMBER	1
REINFORCED CONC. PIPE	RCP
POLYVINYL CHLORIDE	PVC
REGULAR PARKING SPACES	10
HANDICAP PARKING SPACES	1
MEASURED	(M)
RECORD	(R)
DEED	(D)
PLAT	(P)
FINISH FLOOR ELEVATION	FFE
RIGHT-OF-WAY	R.O.W
BENCHMARK	
CONCRETE MONUMENT FOUND	
PROPERTY CORNER FOUND	
PROPERTY CORNER SET 1/2-INCH REBAR SET WITH YELLOW CAP STAMPED "JOHNSON CA-0193LS"	
CONIFEROUS TREE	
DECIDUOUS TREE	
EXISTING CONTOURS	795
SPOT ELEVATION	x 728.5EX
UTILITY & DRAINAGE EASEMENT	U & D
GRAVEL	
CONCRETE	
RIP-RAP	

REVISIONS		
no.	date	description

ALABAMA LICENSED
No. 16897
PROFESSIONAL
LAND SURVEYOR
NATHAN G. JOHNSON
09/02/2021
SEAL

PHASE II - ROAD IMPROVEMENTS, PARKING LOT REPAIRS
ALABAMA A&M UNIVERSITY

Charles Williams & Associates, Inc
ARCHITECTS
3601 8TH AVE. SOUTH
BIRMINGHAM, ALABAMA 35222
PH: 205-250-0700
FAX: 205-250-0515

SHEET TITLE:
TOPOGRAPHIC SURVEY OF BUCHANAN WAY 3
PROJECT NUMBER:
CWA 2019-06B JA 1791EN
DATE:
2.14.22
DRAWN BY:
ATC
CHECKED BY:
NGJ

SHEET NUMBER
C1.3

JOHNSON & ASSOCIATES
ENGINEERING SURVEYING
1218 CHURCH STREET
HUNTSVILLE, ALABAMA 35801
1-256-533-7331
FAX 1-256-533-7332

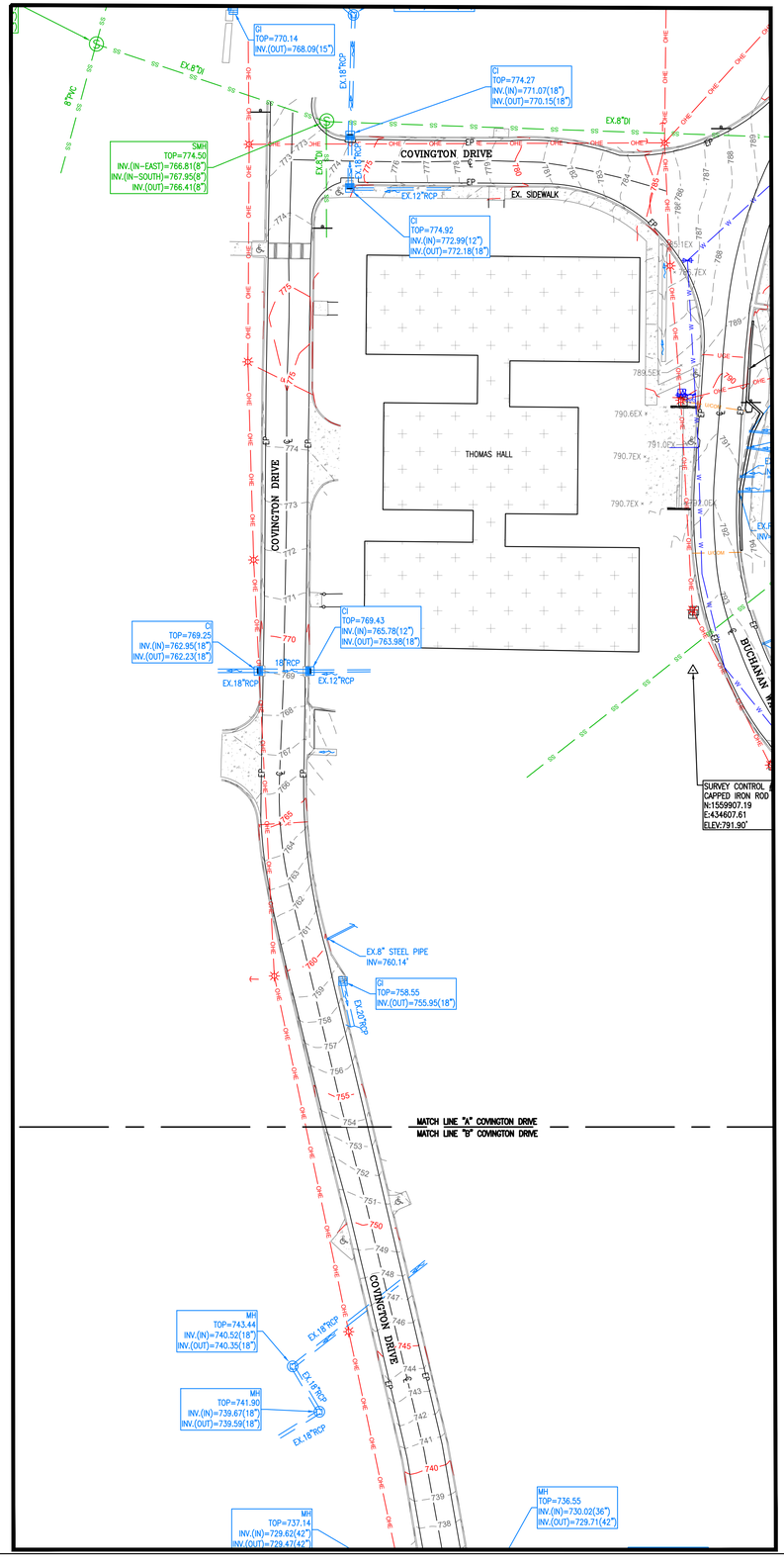

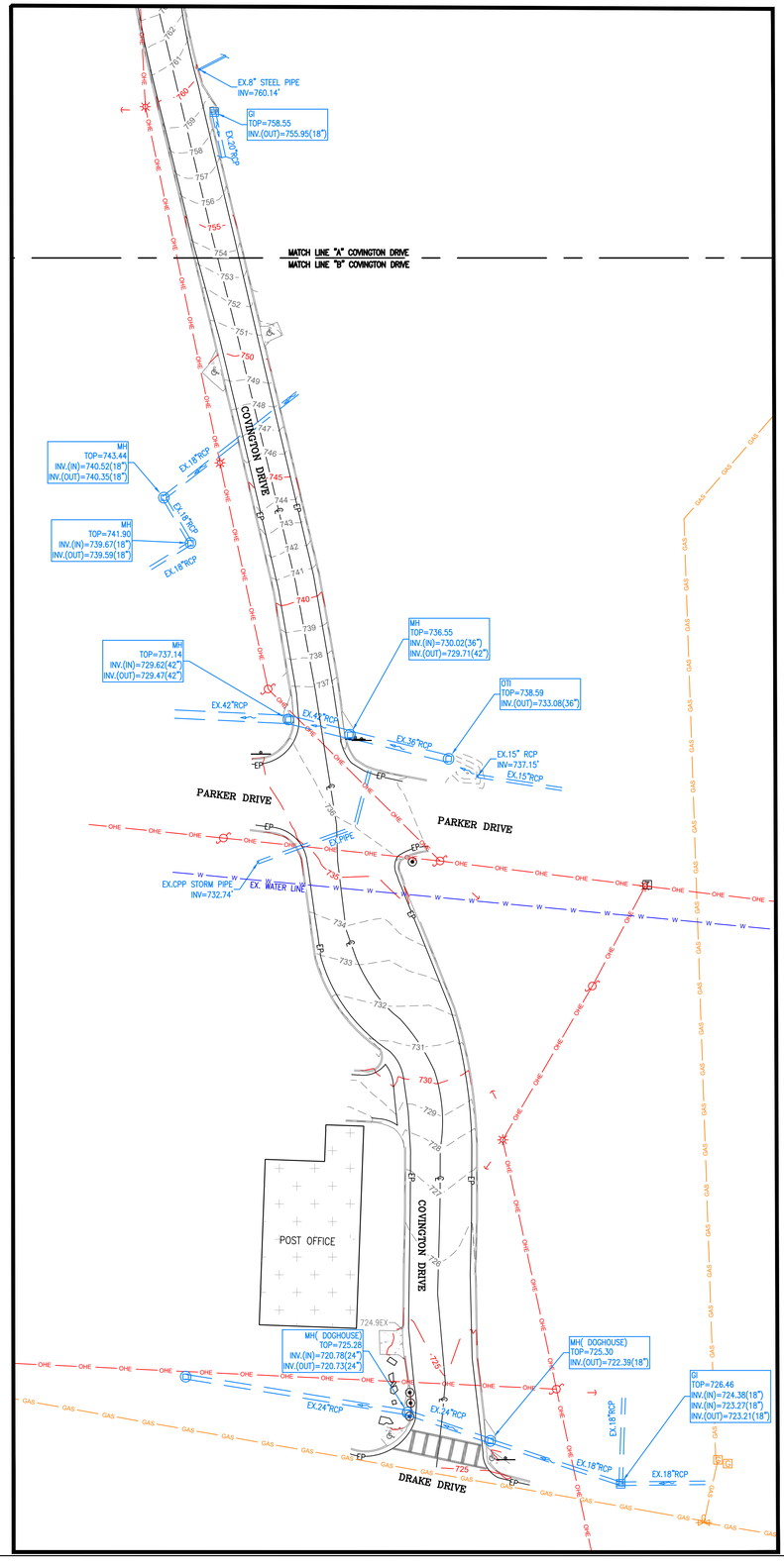

VICINITY MAP

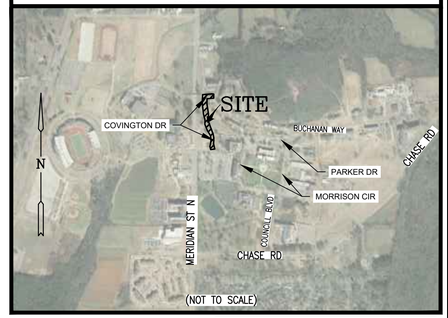

LEGEND

FENCE LINE	—X—X—X—
EDGE OF PAVEMENT	— EP —
BACK OF CURB	— BC —
OVERHEAD ELECTRIC	— OHE —
UNDERGROUND ELECTRIC	— UGE —
SANITARY SEWER	— SS —
GAS LINE	— GAS —
CENTERLINE	— CL —
WATER LINE	— W —
FIBER OPTIC CABLE	— FOC —
COMMUNICATION	— COM —
STORM SEWER LINE	
TREE LINE	
UTILITY POLE	
LIGHT POLE	
GUY WIRE	
ELECTRICAL CABINET	E
LANDSCAPE LIGHT	
TRANSFORMER	
WATER VALVE	
WATER METER	
IRRIGATION VALVE	
FIRE HYDRANT	
TELEPHONE RISER	
UNDERGROUND COM MARKER	
SANITARY SEWER MANHOLE	
SANITARY CLEANOUT	CO
STORM SEWER MANHOLE	
OPEN THROAT INLET	
DOUBLE WING CURB INLET	
SINGLE WING CURB INLET	
GRATE INLET	
FLOW ARROW	
GAS VALVE	
STUB PIPE	
AIR CONDITIONER	
SIGN	
LOT NUMBER	1
REINFORCED CONC. PIPE	RCP
POLYVINYL CHLORIDE	PVC
REGULAR PARKING SPACES	10
HANDICAP PARKING SPACES	1
MEASURED	(M)
RECORD	(R)
DEED	(D)
PLAT	(P)
FINISH FLOOR ELEVATION	FFE
RIGHT-OF-WAY	R.O.W
BENCHMARK	
CONCRETE MONUMENT FOUND	
PROPERTY CORNER FOUND	
PROPERTY CORNER SET 1/2-INCH REBAR SET WITH YELLOW CAP STAMPED "JOHNSON CA-0193LS"	
CONIFEROUS TREE	
DECIDUOUS TREE	
EXISTING CONTOURS	795
SPOT ELEVATION	x 728.5EX
UTILITY & DRAINAGE EASEMENT	U & D
GRAVEL	
CONCRETE	
RIP-RAP	

GRID NORTH

−15 0 15 30 60

SCALE IN FEET
1" = 30'

THE NORTH ARROW IS BASED ON GRID NORTH AS DEFINED BY THE STATE PLANE COORDINATE SYSTEM, ALABAMA EAST ZONE, NAD 1983; (DETERMINED BY GPS OBSERVATIONS)

CERTIFICATE OF ACCURACY

THE ACCURACY OF THE MEASUREMENTS HAS BEEN SUBSTANTIATED BY THE COMPUTATION OF A CLOSED FIELD TRAVERSE, AND THE RELATIVE ERROR OF CLOSURE WAS NOT GREATER THAN 1:10,000.

REVISIONS		
no.	date	description

ALABAMA LICENSED
No. 19891
PROFESSIONAL
LAND SURVEYOR
NATHAN G. JOHNSON
09/02/2021
SEAL

PHASE II - ROAD IMPROVEMENTS, PARKING LOT REPAIRS
ALABAMA A&M UNIVERSITY

Charles Williams & Associates, Inc
ARCHITECTS
3601 8TH AVE. SOUTH
BIRMINGHAM, ALABAMA 35222
PH: 205-250-0700
FAX: 205-250-0515

SHEET TITLE:
TOPOGRAPHIC SURVEY OF COVINGTON DR.
PROJECT NUMBER:
CWA 2019-06B JA 1791EN
DATE:
2.14.22
DRAWN BY:
ATC
CHECKED BY:
NGJ

JOHNSON & ASSOCIATES
ENGINEERING SURVEYING
1218 CHURCH STREET
HUNTSVILLE, ALABAMA 35801
1-256-533-7331
FAX 1-256-533-7332

SHEET NUMBER
C1.4

LEGEND

FENCE LINE	—X—X—X	TELEPHONE RISER		FINISH FLOOR ELEVATION	FFE
EDGE OF PAVEMENT	— EP —	UNDERGROUND COM MARKER		RIGHT-OF-WAY	R.O.W
BACK OF CURB	— BC —	SANITARY SEWER MANHOLE		BENCHMARK	
OVERHEAD ELECTRIC	— OHE —	SANITARY CLEANOUT		CONCRETE MONUMENT FOUND	
UNDERGROUND ELECTRIC	— UGE —	STORM SEWER MANHOLE		PROPERTY CORNER FOUND	
SANITARY SEWER	— SS —	OPEN THROAT INLET		PROPERTY CORNER SET 1/2-INCH REBAR SET WITH YELLOW CAP STAMPED "JOHNSON CA-0193LS"	
GAS LINE	— GAS —	DOUBLE WING CURB INLET		CONIFEROUS TREE	
CENTERLINE	— CL —	SINGLE WING CURB INLET		DECIDUOUS TREE	
WATER LINE	— W —	GRATE INLET		EXISTING CONTOURS	795
FIBER OPTIC CABLE	— FOC —	FLOW ARROW		SPOT ELEVATION	x 728.5EX
COMMUNICATION	— COM —	GAS VALVE		UTILITY & DRAINAGE EASEMENT	U & D
STORM SEWER LINE		STUB PIPE		GRAVEL	
TREE LINE		AIR CONDITIONER		CONCRETE	
UTILITY POLE		SIGN		RIP-RAP	
LIGHT POLE		LOT NUMBER			
GUY WIRE		REINFORCED CONC. PIPE	RCP		
ELECTRICAL CABINET	E	POLYVINYL CHLORIDE	PVC		
LANDSCAPE LIGHT		REGULAR PARKING SPACES			
TRANSFORMER		HANDICAP PARKING SPACES			
WATER VALVE		MEASURED	(M)		
WATER METER		RECORD	(R)		
IRRIGATION VALVE		DEED	(D)		
FIRE HYDRANT		PLAT	(P)		

CERTIFICATE OF ACCURACY

THE ACCURACY OF THE MEASUREMENTS HAS BEEN SUBSTANTIATED BY THE COMPUTATION OF A CLOSED FIELD TRAVERSE, AND THE RELATIVE ERROR OF CLOSURE WAS NOT GREATER THAN 1:10,000.

GRID NORTH N

−15 0 15 30 60

SCALE IN FEET
1" = 30'

THE NORTH ARROW IS BASED ON GRID NORTH AS DEFINED BY THE STATE PLANE COORDINATE SYSTEM, ALABAMA EAST ZONE, NAD 1983; (DETERMINED BY GPS OBSERVATIONS)

VICINITY MAP



(NOT TO SCALE)

REVISIONS

no.	date	description

ALABAMA LICENSED
Matthew G. Johnson
No. 19891
PROFESSIONAL
LAND SURVEYOR
NATHAN G. JOHNSON
09/02/2021
SEAL

PHASE II - ROAD IMPROVEMENTS, PARKING LOT REPAIRS
ALABAMA A&M UNIVERSITY

Charles Williams & Associates, Inc
ARCHITECTS
3601 8TH AVE. SOUTH
BIRMINGHAM, ALABAMA 35222
PH: 205-250-0700
FAX: 205-250-0515

SHEET TITLE:
TOPOGRAPHIC SURVEY OF MORRISON CIR T & PARKER DR

PROJECT NUMBER:
CWA 2019-06B JA 1791EN

DATE:
2.14.22

DRAWN BY:
ATC

CHECKED BY:
NGJ

SHEET NUMBER
C1.5

JOHNSON & ASSOCIATES
ENGINEERING SURVEYING
1218 CHURCH STREET
HUNTSVILLE, ALABAMA 35801
1-256-533-7331
FAX 1-256-533-7332

LEGEND

FENCE LINE	—X—X—X	TELEPHONE RISER		FINISH FLOOR ELEVATION	FFE
EDGE OF PAVEMENT	— EP —	UNDERGROUND COM MARKER		RIGHT-OF-WAY	R.O.W
BACK OF CURB	— BC —	SANITARY SEWER MANHOLE		BENCHMARK	
OVERHEAD ELECTRIC	— OHE —	SANITARY CLEANOUT		CONCRETE MONUMENT FOUND	
UNDERGROUND ELECTRIC	— UGE —	STORM SEWER MANHOLE		PROPERTY CORNER FOUND	
SANITARY SEWER	— SS —	OPEN THROAT INLET		PROPERTY CORNER SET 1/2-INCH REBAR SET WITH YELLOW CAP STAMPED "JOHNSON CA-0193LS"	
GAS LINE	— GAS —	DOUBLE WING CURB INLET		CONIFEROUS TREE	
CENTERLINE	— CL —	SINGLE WING CURB INLET		DECIDUOUS TREE	
WATER LINE	— W —	GRATE INLET		EXISTING CONTOURS	795
FIBER OPTIC CABLE	— FOC —	FLOW ARROW		SPOT ELEVATION	x 728.5EX
COMMUNICATION	— COM —	GAS VALVE		UTILITY & DRAINAGE EASEMENT	U & D
STORM SEWER LINE		STUB PIPE		GRAVEL	
TREE LINE		AIR CONDITIONER		CONCRETE	
UTILITY POLE		SIGN		RIP-RAP	
LIGHT POLE		LOT NUMBER	(1)		
GUY WIRE		REINFORCED CONC. PIPE	RCP		
ELECTRICAL CABINET	E	POLYVINYL CHLORIDE	PVC		
LANDSCAPE LIGHT		REGULAR PARKING SPACES			
TRANSFORMER		HANDICAP PARKING SPACES			
WATER VALVE		MEASURED	(M)		
WATER METER	W	RECORD	(R)		
IRRIGATION VALVE		DEED	(D)		
FIRE HYDRANT		PLAT	(P)		

CERTIFICATE OF ACCURACY

THE ACCURACY OF THE MEASUREMENTS HAS BEEN SUBSTANTIATED BY THE COMPUTATION OF A CLOSED FIELD TRAVERSE, AND THE RELATIVE ERROR OF CLOSURE WAS NOT GREATER THAN 1:10,000.

GRID NORTH N

−15 0 15 30 60

SCALE IN FEET
1" = 30'

THE NORTH ARROW IS BASED ON GRID NORTH AS DEFINED BY THE STATE PLANE COORDINATE SYSTEM, ALABAMA **EAST** ZONE, NAD 1983; (DETERMINED BY GPS OBSERVATIONS)

VICINITY MAP

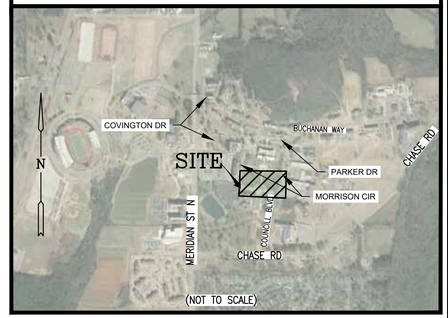

(NOT TO SCALE)

MATCH LINE "A" MORRISON CIRCLE
MATCH LINE "B" MORRISON CIRCLE

PATTON HALL

MORRISON CIRCLE

EX. SIDEWALK

EX. WATER LINE

18"RCP

GI
TOP=731.16
INV.(OUT)=726.98(18")

SPRINK

SURVEY CONTROL #11
MAG
N:1558742.31
E:434967.86
ELEV:728.46'

15"RCP

GI
TOP=726.1
INV.(OUT)=722.93(18")

SPEED BUMP

BUS STOP

EX. GI
TOP=725.10'

GI
TOP=725.15
INV.(IN)=720.26(42")
INV.(OUT)=719.75(42")

SURVEY CONTROL #26
CAPPED IRON ROD SET
N:1558627.06
E:435350.33
ELEV:728.23'

EX.42"RCP

EX.30"RCP

COUNCILL DRIVE

724.2EX
723.6EX
722.9EX
723.5EX
722.9EX
723.2EX
725.4EX
724.4EX
722.5EX
722.8EX
722.4EX
727.6EX

SPEED BUMP

GI
TOP=730.56
INV.(IN-SOUTHEAST)=726.78(30")
INV.(IN-NORTH)=726.72(30")
INV.(OUT-WEST)=726.72(30")

EX.30"RCP

GI
TOP=731.32
INV.(OUT)=727.17(30")

731.1EX

SPEED BUMP

GI
TOP=741.19
INV.(OUT)=738.17(24")

24"RCP

SURVEY CONTROL #9
MAG NAIL SET
N:1558803.97
E:435643.87
ELEV:737.07'

EX. GI
TOP=733.66'

ROCK RETAINING WALL

GI
TOP=731.88
INV.(IN)=724.53(48")
INV.(OUT)=724.50(48")

EX.48"RCP

AKIMBO ROAD

BUS STOP

EX. SIDEWALK

EX. WATER LINE

MORRISON CIRCLE

REVISIONS		
no.	date	description

ALABAMA LICENSED
No. 16891
PROFESSIONAL
LAND SURVEYOR
NATHAN G. JOHNSON
09/02/2021
SEAL

PHASE II - ROAD IMPROVEMENTS, PARKING LOT REPAIRS
ALABAMA A&M UNIVERSITY

Charles Williams & Associates, Inc
ARCHITECTS
3601 8TH AVE. SOUTH
BIRMINGHAM, ALABAMA 35222
PH: 205-250-0700
FAX: 205-250-0515

SHEET TITLE:
TOPOGRAPHIC SURVEY OF MORRISON CIR 2

PROJECT NUMBER:
CWA 2019-06B JA 1791EN

DATE:
2.14.22

DRAWN BY:
ATC

CHECKED BY:
NGJ

SHEET NUMBER
C1.6

JOHNSON & ASSOCIATES
ENGINEERING SURVEYING
1218 CHURCH STREET
HUNTSVILLE, ALABAMA 35801
1-256-533-7331
FAX 1-256-533-7332

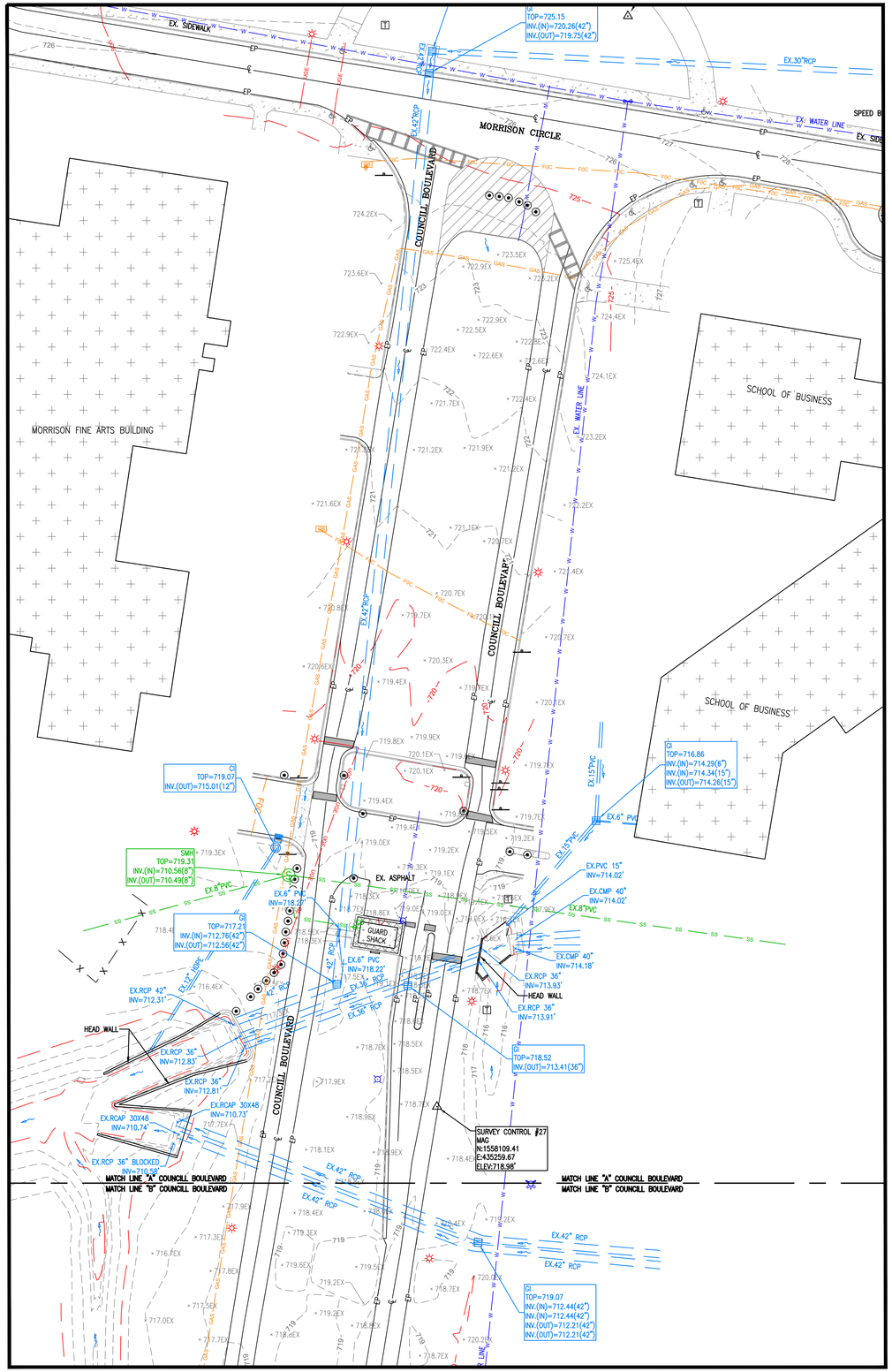

VICINITY MAP

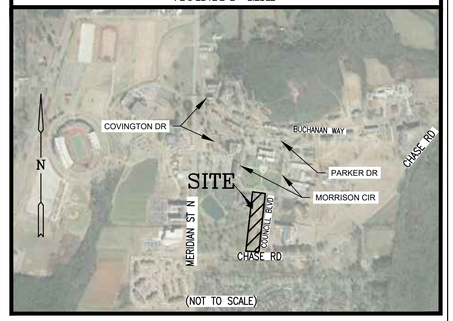

CERTIFICATE OF ACCURACY

THE ACCURACY OF THE MEASUREMENTS HAS BEEN SUBSTANTIATED BY THE COMPUTATION OF A CLOSED FIELD TRAVERSE, AND THE RELATIVE ERROR OF CLOSURE WAS NOT GREATER THAN 1:10,000.

GRID NORTH

−15 0 15 30 60

SCALE IN FEET
1" = 30'

THE NORTH ARROW IS BASED ON GRID NORTH AS DEFINED BY THE STATE PLANE COORDINATE SYSTEM, ALABAMA **EAST** ZONE, NAD 1983; (DETERMINED BY GPS OBSERVATIONS)

LEGEND

FENCE LINE	—X—X—X—
EDGE OF PAVEMENT	— EP —
BACK OF CURB	— BC —
OVERHEAD ELECTRIC	— OHE —
UNDERGROUND ELECTRIC	— UGE —
SANITARY SEWER	— SS —
GAS LINE	— GAS —
CENTERLINE	— CL —
WATER LINE	— W —
FIBER OPTIC CABLE	— FOC —
COMMUNICATION	— COM —
STORM SEWER LINE	
TREE LINE	
UTILITY POLE	
LIGHT POLE	
GUY WIRE	
ELECTRICAL CABINET	E
LANDSCAPE LIGHT	
TRANSFORMER	
WATER VALVE	
WATER METER	
IRRIGATION VALVE	
FIRE HYDRANT	
TELEPHONE RISER	
UNDERGROUND COM MARKER	
SANITARY SEWER MANHOLE	
SANITARY CLEANOUT	
STORM SEWER MANHOLE	
OPEN THROAT INLET	
DOUBLE WING CURB INLET	
SINGLE WING CURB INLET	
GRATE INLET	
FLOW ARROW	
GAS VALVE	
STUB PIPE	
AIR CONDITIONER	
SIGN	
LOT NUMBER	10
REINFORCED CONC. PIPE	RCP
POLYVINYL CHLORIDE	PVC
REGULAR PARKING SPACES	10
HANDICAP PARKING SPACES	1
MEASURED	(M)
RECORD	(R)
DEED	(D)
PLAT	(P)
FINISH FLOOR ELEVATION	FFE
RIGHT-OF-WAY	R.O.W
BENCHMARK	
CONCRETE MONUMENT FOUND	
PROPERTY CORNER FOUND	
PROPERTY CORNER SET 1/2-INCH REBAR, SET WITH YELLOW CAP STAMPED "JOHNSON CA-0193LS"	
CONIFEROUS TREE	
DECIDUOUS TREE	
EXISTING CONTOURS	795
SPOT ELEVATION	x 728.5EX
UTILITY & DRAINAGE EASEMENT	U & D
GRAVEL	
CONCRETE	
RIP-RAP	

JOHNSON & ASSOCIATES
ENGINEERING SURVEYING
1218 CHURCH STREET
HUNTSVILLE, ALABAMA 35801
1-256-533-7331
FAX 1-256-533-7332

REVISIONS	
no.	description
date	

ALABAMA LICENSED
No. 16898
PROFESSIONAL
LAND SURVEYOR
NATHAN G. JOHNSON
09/02/2021
SEAL

PHASE II - ROAD IMPROVEMENTS, PARKING LOT REPAIRS
ALABAMA A&M UNIVERSITY

Charles Williams & Associates, Inc
ARCHITECTS
3601 8TH AVE. SOUTH
BIRMINGHAM, ALABAMA 35222
PH: 205-250-0700
FAX: 205-250-0515

SHEET TITLE:
TOPOGRAPHIC SURVEY OF COUNCILL BLVD
PROJECT NUMBER:
CWA 2019-06B JA 1791EN
DATE:
2.14.22
DRAWN BY:
ATC
CHECKED BY:
NGJ

SHEET NUMBER
C1.7

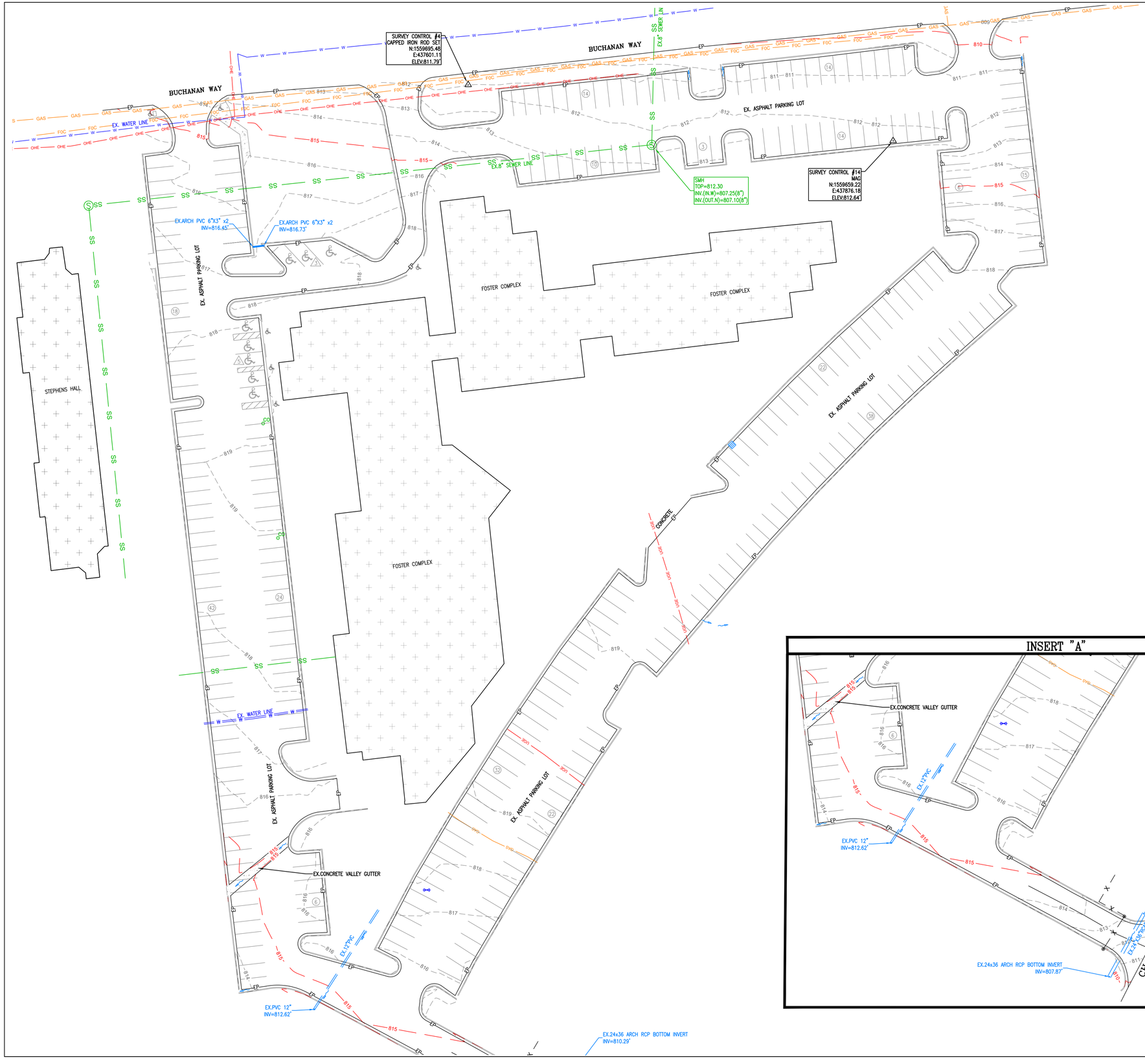

VICINITY MAP



CERTIFICATE OF ACCURACY

THE ACCURACY OF THE MEASUREMENTS HAS BEEN SUBSTANTIATED BY THE COMPUTATION OF A CLOSED FIELD TRAVERSE, AND THE RELATIVE ERROR OF CLOSURE WAS NOT GREATER THAN 1:10,000.

GRID NORTH

−15 0 15 30 60
SCALE IN FEET
1"= 30'

THE NORTH ARROW IS BASED ON GRID NORTH AS DEFINED BY THE STATE PLANE COORDINATE SYSTEM, ALABAMA EAST ZONE, NAD 1983; (DETERMINED BY GPS OBSERVATIONS)

LEGEND

FENCE LINE	—X—X—X—
EDGE OF PAVEMENT	EP
BACK OF CURB	BC
OVERHEAD ELECTRIC	OHE
UNDERGROUND ELECTRIC	UGE
SANITARY SEWER	SS
GAS LINE	GAS
CENTERLINE	CL
WATER LINE	W
FIBER OPTIC CABLE	FOC
COMMUNICATION	COM
STORM SEWER LINE	
TREE LINE	
UTILITY POLE	
LIGHT POLE	
GUY WIRE	
ELECTRICAL CABINET	E
LANDSCAPE LIGHT	
TRANSFORMER	
WATER VALVE	
WATER METER	
IRRIGATION VALVE	
FIRE HYDRANT	
TELEPHONE RISER	
UNDERGROUND COM MARKER	
SANITARY SEWER MANHOLE	
SANITARY CLEANOUT	
STORM SEWER MANHOLE	
OPEN THROAT INLET	
DOUBLE WING CURB INLET	
SINGLE WING CURB INLET	
GRATE INLET	
FLOW ARROW	
GAS VALVE	
STUB PIPE	
AIR CONDITIONER	
SIGN	
LOT NUMBER	(1)
REINFORCED CONC. PIPE	RCP
POLYVINYL CHLORIDE	PVC
REGULAR PARKING SPACES	(10)
HANDICAP PARKING SPACES	(M)
MEASURED	(M)
RECORD	(R)
DEED	(D)
PLAT	(P)
FINISH FLOOR ELEVATION	FFE
RIGHT-OF-WAY	R.O.W
BENCHMARK	
CONCRETE MONUMENT FOUND	
PROPERTY CORNER FOUND	
PROPERTY CORNER SET 1/2-INCH REBAR SET WITH YELLOW CAP STAMPED "JOHNSON CA-0193LS"	
CONIFEROUS TREE	
DECIDUOUS TREE	
EXISTING CONTOURS	795
SPOT ELEVATION	x 728.5EX
UTILITY & DRAINAGE EASEMENT	U & D
GRAVEL	
CONCRETE	
RIP-RAP	

JOHNSON & ASSOCIATES
ENGINEERING SURVEYING
1218 CHURCH STREET
HUNTSVILLE, ALABAMA 35801
1-256-533-7331
FAX 1-256-533-7332

REVISIONS		
no.	date	description

ALABAMA LICENSED
No. 14890
PROFESSIONAL
LAND SURVEYOR
NATHAN G. JOHNSON
09/02/2021
SEAL

PHASE II - ROAD IMPROVEMENTS, PARKING LOT REPAIRS
ALABAMA A&M UNIVERSITY

Charles Williams & Associates, Inc
ARCHITECTS
3601 8TH AVE. SOUTH
BIRMINGHAM, ALABAMA 35222
PH: 205-250-0700
FAX: 205-250-0515

SHEET TITLE:
TOPOGRAPHIC SURVEY OF FOSTER PARKING LOT

PROJECT NUMBER:
CWA 2019-06B JA 1791EN

DATE:
2.14.22

DRAWN BY:
ATC

CHECKED BY:
NGJ

SHEET NUMBER
C1.8

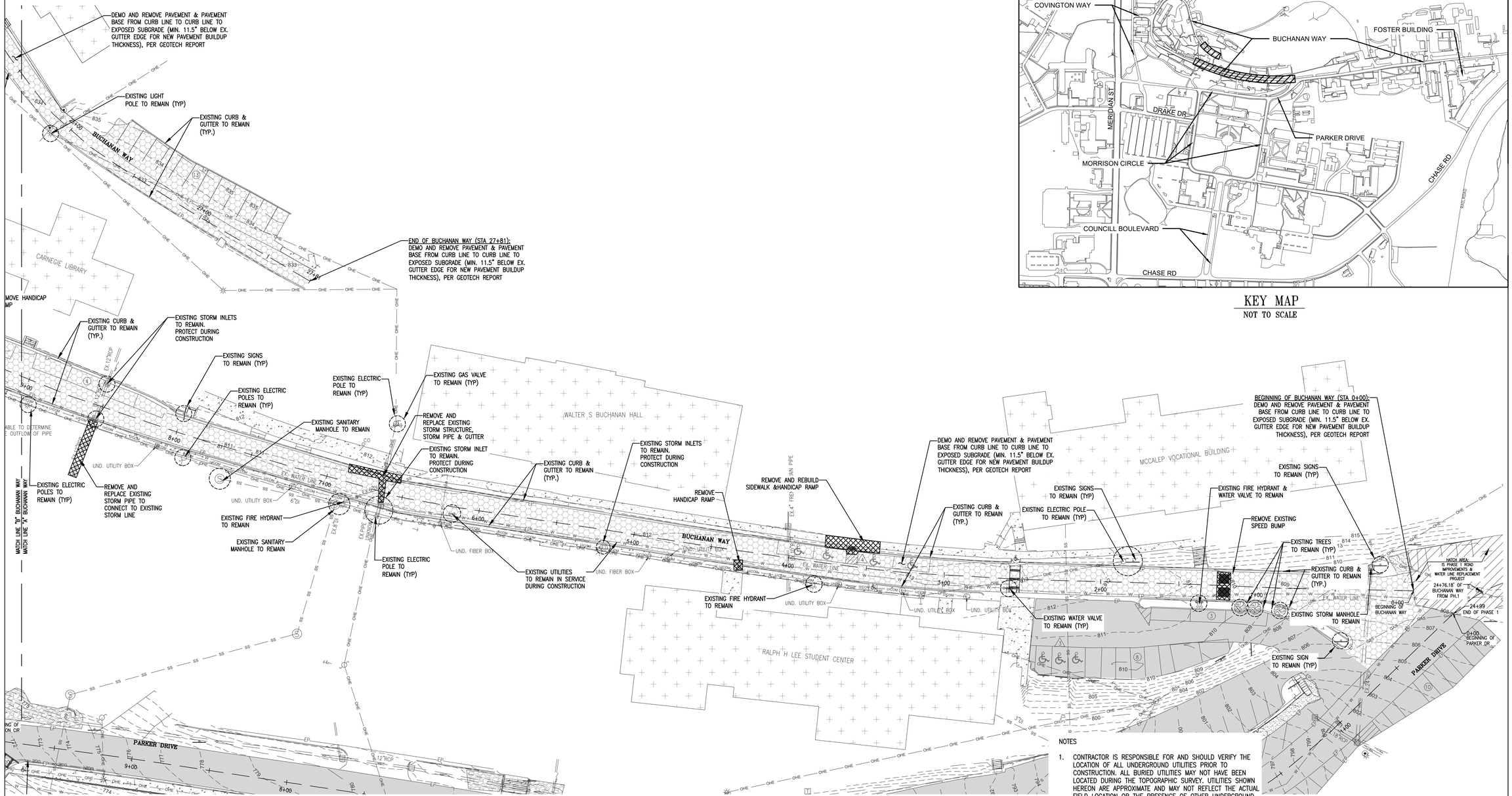

KEY MAP
NOT TO SCALE

NOTES

1. CONTRACTOR IS RESPONSIBLE FOR AND SHOULD VERIFY THE LOCATION OF ALL UNDERGROUND UTILITIES PRIOR TO CONSTRUCTION. ALL BURIED UTILITIES MAY NOT HAVE BEEN LOCATED DURING THE TOPOGRAPHIC SURVEY. UTILITIES SHOWN HEREON ARE APPROXIMATE AND MAY NOT REFLECT THE ACTUAL FIELD LOCATION OR THE PRESENCE OF OTHER UNDERGROUND UTILITIES.
2. EXCAVATION TRENCHES FOR ALL REMOVED UNDERGROUND UTILITIES SHALL BE BACKFILLED IN ACCORDANCE WITH CIVIL SITE DETAILS FOR UNDERGROUND UTILITIES IN TRAFFIC AREAS.
3. CAUTION: CONTRACTOR SHALL EXERCISE EXTREME CAUTION WHEN WORKING ABOVE AND AROUND EXISTING UTILITIES.
4. ALL DEBRIS SHOULD BE HAULED OFF AND DISPOSED IN ACCORDANCE WITH ALL APPLICABLE STATE AND/OR CITY OF HUNTSVILLE RULES AND REGULATIONS.
5. CONTRACTOR SHALL PROVIDE ADEQUATE TRAFFIC CONTROL MEASURES IN ACCORDANCE WITH THE LATEST MANUAL OF UNIFORM TRAFFIC CONTROL DEVICES FOR AREAS WHERE VEHICLE ARE ENTERING PUBLIC ROADWAYS AND TO RESTRICT PEDESTRIAN AND VEHICULAR TRAFFIC FROM ENTERING THE WORK ZONE DURING CONSTRUCTION. THE CONTRACTOR SHALL BE RESPONSIBLE FOR JOBSITE SAFETY THROUGHOUT THE DURATION OF THE PROJECT.
6. PAVEMENT BUILD-UP RECOMMENDATIONS AND SOIL SUBGRADE REQUIREMENTS SHOWN IN THE GEOTECHNICAL ENGINEER'S REPORT SHALL TAKE PRECEDENCE OVER THESE PAVEMENT SPECIFICATIONS.
7. CONTRACTOR SHALL NOTIFY ENGINEER OF RECORD OF ANY DISCREPANCIES FOUND BETWEEN GEOTECHNICAL ENGINEER'S REPORT AND PLAN SET.

DEMOLITION LEGEND

X X X X	REMOVE EXISTING CURB & GUTTER
	MILL EXISTING ASPHALT PAVING FOR OVERLAY
	REMOVE EXISTING CONCRETE, ASPHALT OR STRUCTURE
	FULL PAVEMENT RE-BUILD
	REMOVE EXISTING TREE OR SIGN
	PRESERVE EXISTING TREE, SIGN OR FACILITY

JOHNSON & ASSOCIATES
ENGINEERING SURVEYING
1218 CHURCH STREET
HUNTSVILLE, ALABAMA 35801
1-256-533-7331
FAX 1-256-533-7332

REVISIONS

no	date	description

ALABAMA
STEPHEN L. WALKER
NO. 16165
PROFESSIONAL
ENGINEER
02/14/2022
SEAL

PHASE II - ROAD IMPROVEMENTS, PARKING LOT REPAIRS

ALABAMA A&M UNIVERSITY

Charles Williams & Associates, Inc
ARCHITECTS
3601 8TH AVE. SOUTH
BIRMINGHAM, ALABAMA 35222
PH: 205-250-0700
FAX: 205-250-0515

SHEET TITLE:
DEMOLITION PLAN
BUCHANAN WAY 1

PROJECT NUMBER:
CWA 2019-06B JA 1791EN

DATE:
02-14-2022

DRAWN BY:
ATC/RDH

CHECKED BY:
SW/ATC

SHEET NUMBER
C2.1

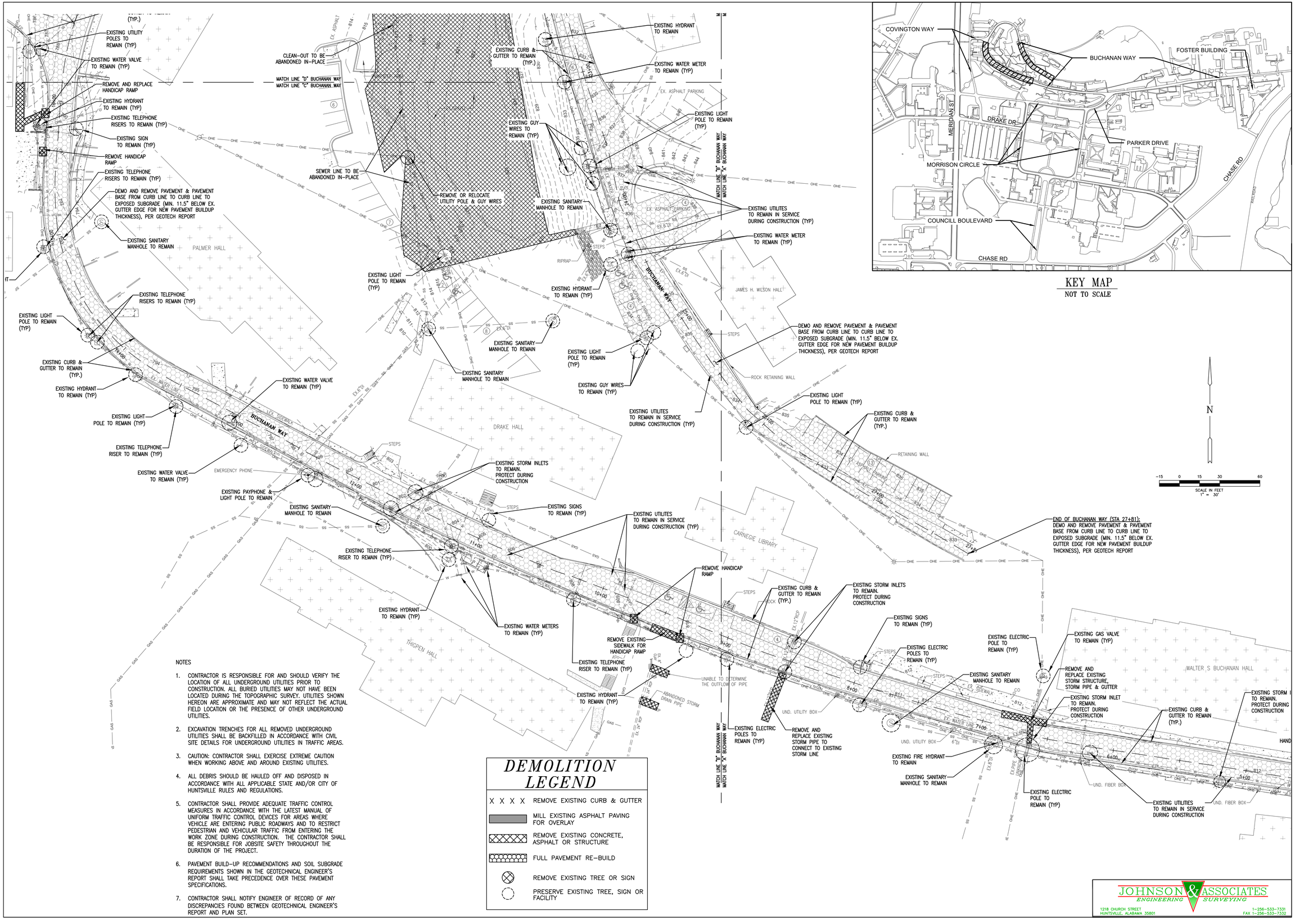

KEY MAP
NOT TO SCALE

DEMOLITION LEGEND

- X X X X — REMOVE EXISTING CURB & GUTTER
- MILL EXISTING ASPHALT PAVING FOR OVERLAY
- REMOVE EXISTING CONCRETE, ASPHALT OR STRUCTURE
- FULL PAVEMENT RE-BUILD
- REMOVE EXISTING TREE OR SIGN
- PRESERVE EXISTING TREE, SIGN OR FACILITY

NOTES

1. CONTRACTOR IS RESPONSIBLE FOR AND SHOULD VERIFY THE LOCATION OF ALL UNDERGROUND UTILITIES PRIOR TO CONSTRUCTION. ALL BURIED UTILITIES MAY NOT HAVE BEEN LOCATED DURING THE TOPOGRAPHIC SURVEY. UTILITIES SHOWN HEREON ARE APPROXIMATE AND MAY NOT REFLECT THE ACTUAL FIELD LOCATION OR THE PRESENCE OF OTHER UNDERGROUND UTILITIES.
2. EXCAVATION TRENCHES FOR ALL REMOVED UNDERGROUND UTILITIES SHALL BE BACKFILLED IN ACCORDANCE WITH CIVIL SITE DETAILS FOR UNDERGROUND UTILITIES IN TRAFFIC AREAS.
3. CAUTION: CONTRACTOR SHALL EXERCISE EXTREME CAUTION WHEN WORKING ABOVE AND AROUND EXISTING UTILITIES.
4. ALL DEBRIS SHOULD BE HAULED OFF AND DISPOSED IN ACCORDANCE WITH ALL APPLICABLE STATE AND/OR CITY OF HUNTSVILLE RULES AND REGULATIONS.
5. CONTRACTOR SHALL PROVIDE ADEQUATE TRAFFIC CONTROL MEASURES IN ACCORDANCE WITH THE LATEST MANUAL OF UNIFORM TRAFFIC CONTROL DEVICES FOR AREAS WHERE VEHICLE ARE ENTERING PUBLIC ROADWAYS AND TO RESTRICT PEDESTRIAN AND VEHICULAR TRAFFIC FROM ENTERING THE WORK ZONE DURING CONSTRUCTION. THE CONTRACTOR SHALL BE RESPONSIBLE FOR JOBSITE SAFETY THROUGHOUT THE DURATION OF THE PROJECT.
6. PAVEMENT BUILD-UP RECOMMENDATIONS AND SOIL SUBGRADE REQUIREMENTS SHOWN IN THE GEOTECHNICAL ENGINEER'S REPORT SHALL TAKE PRECEDENCE OVER THESE PAVEMENT SPECIFICATIONS.
7. CONTRACTOR SHALL NOTIFY ENGINEER OF RECORD OF ANY DISCREPANCIES FOUND BETWEEN GEOTECHNICAL ENGINEER'S REPORT AND PLAN SET.

REVISIONS

no.	date	description

ALABAMA — STEPHEN L. WALKER — NO. 16165 — PROFESSIONAL ENGINEER
02/14/2022
SEAL

PHASE II - ROAD IMPROVEMENTS, PARKING LOT REPAIRS
ALABAMA A&M UNIVERSITY

Charles Williams & Associates, Inc
ARCHITECTS
3601 8TH AVE. SOUTH
BIRMINGHAM, ALABAMA 35222
PH: 205-250-0700
FAX: 205-250-0515

SHEET TITLE:	DEMOLITION PLAN BUCHANAN WAY 2
PROJECT NUMBER:	CWA 2019-06B JA 1791EN
DATE:	02-14-2022
DRAWN BY:	ATC/RDH
CHECKED BY:	SW/ATC

SHEET NUMBER
C2.2

JOHNSON & ASSOCIATES
ENGINEERING SURVEYING
1218 CHURCH STREET
HUNTSVILLE, ALABAMA 35801
1-256-533-7331
FAX 1-256-533-7332

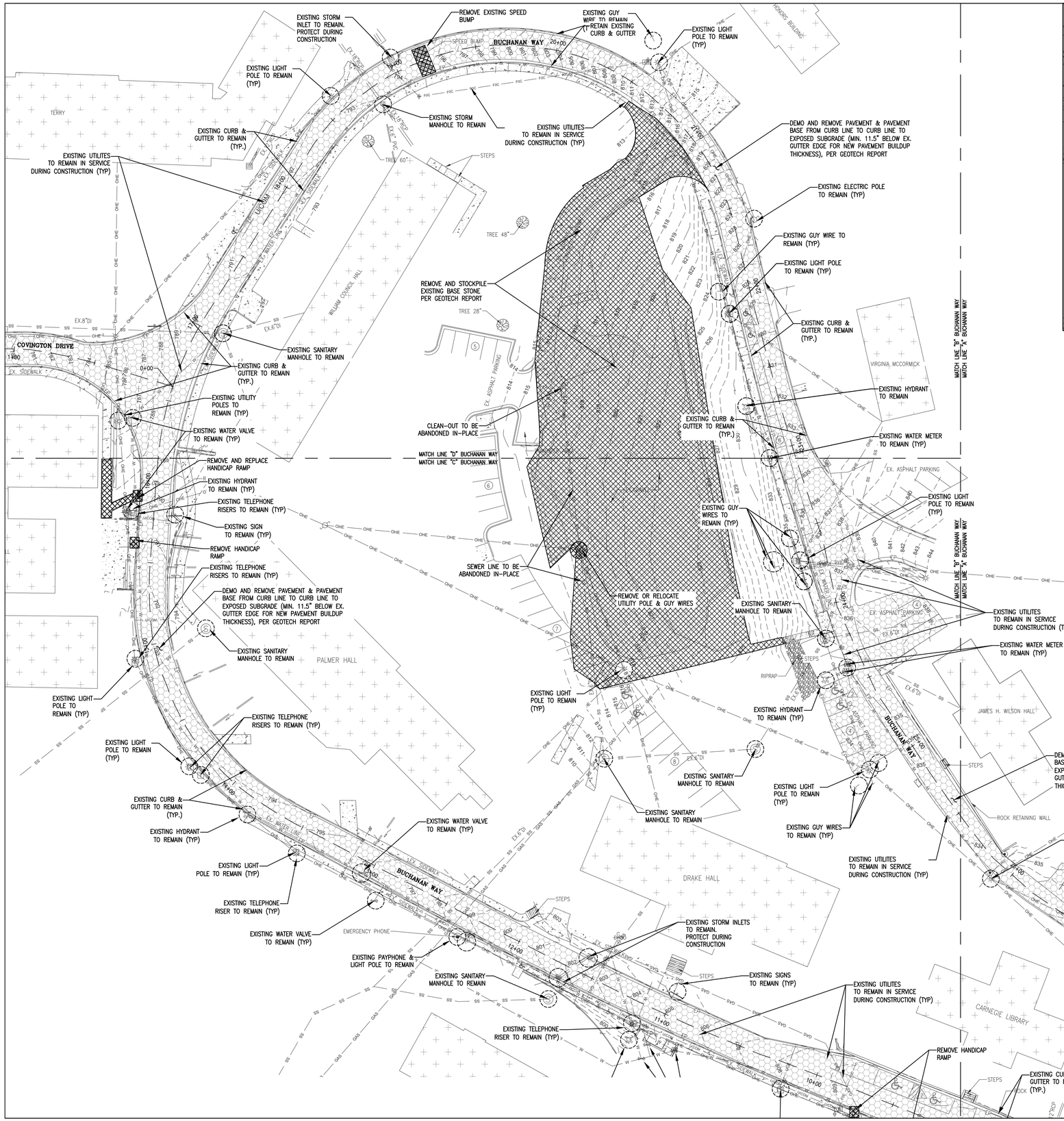

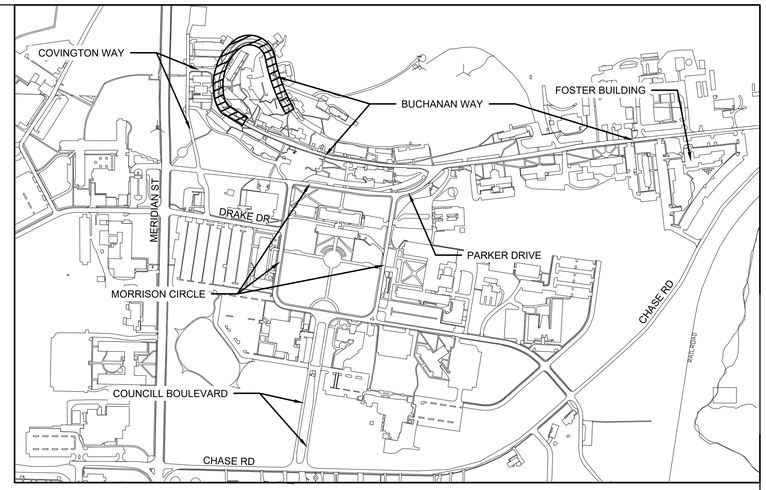

KEY MAP
NOT TO SCALE

NOTES

1. CONTRACTOR IS RESPONSIBLE FOR AND SHOULD VERIFY THE LOCATION OF ALL UNDERGROUND UTILITIES PRIOR TO CONSTRUCTION. ALL BURIED UTILITIES MAY NOT HAVE BEEN LOCATED DURING THE TOPOGRAPHIC SURVEY. UTILITIES SHOWN HEREON ARE APPROXIMATE AND MAY NOT REFLECT THE ACTUAL FIELD LOCATION OR THE PRESENCE OF OTHER UNDERGROUND UTILITIES.
2. EXCAVATION TRENCHES FOR ALL REMOVED UNDERGROUND UTILITIES SHALL BE BACKFILLED IN ACCORDANCE WITH CIVIL SITE DETAILS FOR UNDERGROUND UTILITIES IN TRAFFIC AREAS.
3. CAUTION: CONTRACTOR SHALL EXERCISE EXTREME CAUTION WHEN WORKING ABOVE AND AROUND EXISTING UTILITIES.
4. ALL DEBRIS SHOULD BE HAULED OFF AND DISPOSED IN ACCORDANCE WITH ALL APPLICABLE STATE AND/OR CITY OF HUNTSVILLE RULES AND REGULATIONS.
5. CONTRACTOR SHALL PROVIDE ADEQUATE TRAFFIC CONTROL MEASURES IN ACCORDANCE WITH THE LATEST MANUAL OF UNIFORM TRAFFIC CONTROL DEVICES FOR AREAS WHERE VEHICLE ARE ENTERING PUBLIC ROADWAYS AND TO RESTRICT PEDESTRIAN AND VEHICULAR TRAFFIC FROM ENTERING THE WORK ZONE DURING CONSTRUCTION. THE CONTRACTOR SHALL BE RESPONSIBLE FOR JOBSITE SAFETY THROUGHOUT THE DURATION OF THE PROJECT.
6. PAVEMENT BUILD-UP RECOMMENDATIONS AND SOIL SUBGRADE REQUIREMENTS SHOWN IN THE GEOTECHNICAL ENGINEER'S REPORT SHALL TAKE PRECEDENCE OVER THESE PAVEMENT SPECIFICATIONS.
7. CONTRACTOR SHALL NOTIFY ENGINEER OF RECORD OF ANY DISCREPANCIES FOUND BETWEEN GEOTECHNICAL ENGINEER'S REPORT AND PLAN SET.

DEMOLITION LEGEND

X X X X	REMOVE EXISTING CURB & GUTTER
	MILL EXISTING ASPHALT PAVING FOR OVERLAY
	REMOVE EXISTING CONCRETE, ASPHALT OR STRUCTURE
	FULL PAVEMENT RE-BUILD
	REMOVE EXISTING TREE OR SIGN
	PRESERVE EXISTING TREE, SIGN OR FACILITY

N

−15 0 15 30 60
SCALE IN FEET
1" = 30'

JOHNSON & ASSOCIATES
ENGINEERING SURVEYING
1218 CHURCH STREET
HUNTSVILLE, ALABAMA 35801
T-256-533-7331
FAX T-256-533-7332

REVISIONS

no.	date	description

STEPHEN L. WALKER
NO. 16165
PROFESSIONAL ENGINEER
02/14/2022
SEAL

PHASE II - ROAD IMPROVEMENTS, PARKING LOT REPAIRS
ALABAMA A&M UNIVERSITY

Charles Williams & Associates, INC
ARCHITECTS
3601 8TH AVE. SOUTH
BIRMINGHAM, ALABAMA 35222
PH: 205-250-0700
FAX: 205-250-0515

SHEET TITLE:
DEMOLITION PLAN
BUCHANAN WAY 3/PARKING LOT 1
PROJECT NUMBER:
CWA 2019-06B JA 1791EN
DATE:
02-14-2022
DRAWN BY:
ATC/RDH
CHECKED BY:
SW/ATC

SHEET NUMBER
C2.3

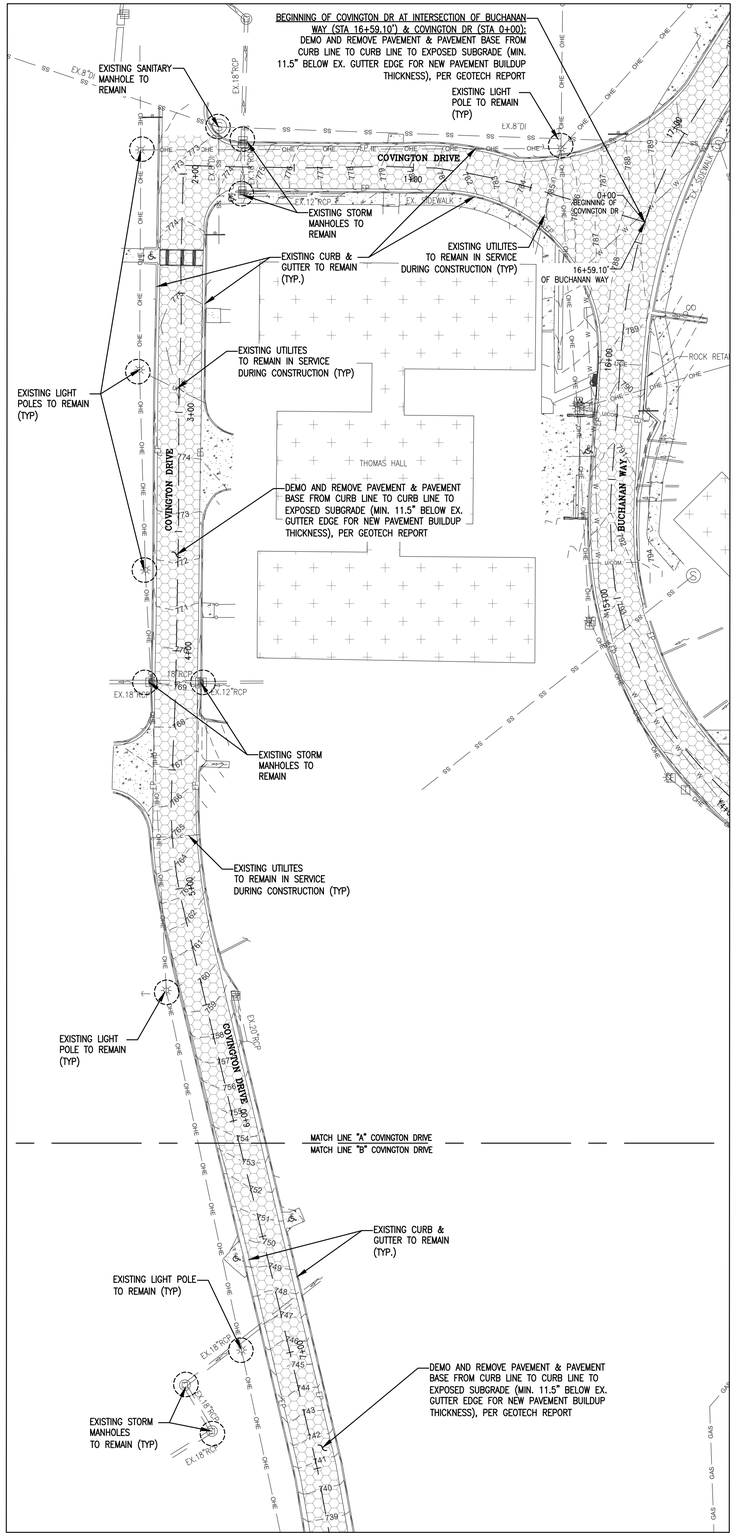

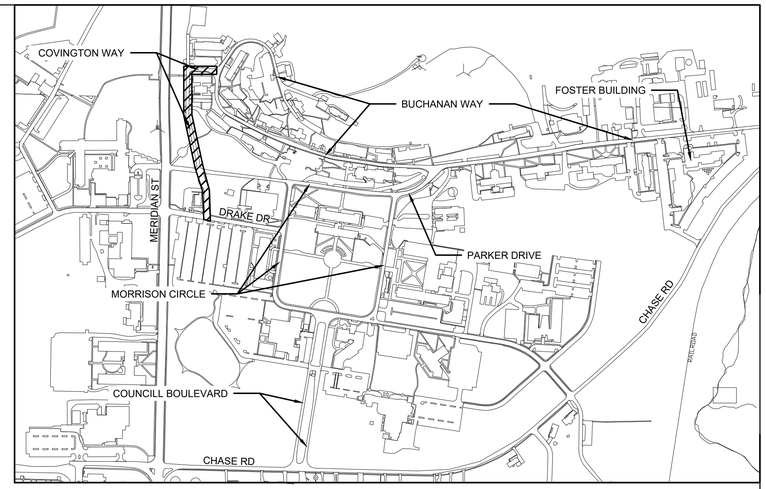

KEY MAP
NOT TO SCALE

NOTES

1. CONTRACTOR IS RESPONSIBLE FOR AND SHOULD VERIFY THE LOCATION OF ALL UNDERGROUND UTILITIES PRIOR TO CONSTRUCTION. ALL BURIED UTILITIES MAY NOT HAVE BEEN LOCATED DURING THE TOPOGRAPHIC SURVEY. UTILITIES SHOWN HEREON ARE APPROXIMATE AND MAY NOT REFLECT THE ACTUAL FIELD LOCATION OR THE PRESENCE OF OTHER UNDERGROUND UTILITIES.
2. EXCAVATION TRENCHES FOR ALL REMOVED UNDERGROUND UTILITIES SHALL BE BACKFILLED IN ACCORDANCE WITH CIVIL SITE DETAILS FOR UNDERGROUND UTILITIES IN TRAFFIC AREAS.
3. CAUTION: CONTRACTOR SHALL EXERCISE EXTREME CAUTION WHEN WORKING ABOVE AND AROUND EXISTING UTILITIES.
4. ALL DEBRIS SHOULD BE HAULED OFF AND DISPOSED IN ACCORDANCE WITH ALL APPLICABLE STATE AND/OR CITY OF HUNTSVILLE RULES AND REGULATIONS.
5. CONTRACTOR SHALL PROVIDE ADEQUATE TRAFFIC CONTROL MEASURES IN ACCORDANCE WITH THE LATEST MANUAL OF UNIFORM TRAFFIC CONTROL DEVICES FOR AREAS WHERE VEHICLE ARE ENTERING PUBLIC ROADWAYS AND TO RESTRICT PEDESTRIAN AND VEHICULAR TRAFFIC FROM ENTERING THE WORK ZONE DURING CONSTRUCTION. THE CONTRACTOR SHALL BE RESPONSIBLE FOR JOBSITE SAFETY THROUGHOUT THE DURATION OF THE PROJECT.
6. PAVEMENT BUILD-UP RECOMMENDATIONS AND SOIL SUBGRADE REQUIREMENTS SHOWN IN THE GEOTECHNICAL ENGINEER'S REPORT SHALL TAKE PRECEDENCE OVER THESE PAVEMENT SPECIFICATIONS.
7. CONTRACTOR SHALL NOTIFY ENGINEER OF RECORD OF ANY DISCREPANCIES FOUND BETWEEN GEOTECHNICAL ENGINEER'S REPORT AND PLAN SET.

DEMOLITION LEGEND

X X X X	REMOVE EXISTING CURB & GUTTER
	MILL EXISTING ASPHALT PAVING FOR OVERLAY
	REMOVE EXISTING CONCRETE, ASPHALT OR STRUCTURE
	FULL PAVEMENT RE-BUILD
	REMOVE EXISTING TREE OR SIGN
	PRESERVE EXISTING TREE, SIGN OR FACILITY

N

-15 0 15 30 60
SCALE IN FEET
1" = 30'

JOHNSON & ASSOCIATES
ENGINEERING SURVEYING
1218 CHURCH STREET
HUNTSVILLE, ALABAMA 35801
T-256-533-7331
FAX T-256-533-7332

REVISIONS		
no.	date	description

ALABAMA
JAMES T. WALKER
NO. 16165
PROFESSIONAL
ENGINEER
STEPHEN L. WALKER
02/14/2022
SEAL

PHASE II - ROAD IMPROVEMENTS, PARKING LOT REPAIRS
ALABAMA A&M UNIVERSITY

Charles Williams & Associates, INC
ARCHITECTS
3601 6TH AVE. SOUTH
BIRMINGHAM, ALABAMA 35222
PH: 205-250-0700
FAX: 205-250-0515

SHEET TITLE: DEMOLITION PLAN
COVINGTON DRIVE
PROJECT NUMBER: CWA 2019-06B JA 1791EN
DATE: 02-14-2022
DRAWN BY: ATC/RDH
CHECKED BY: SW/ATC

SHEET NUMBER
C2.4

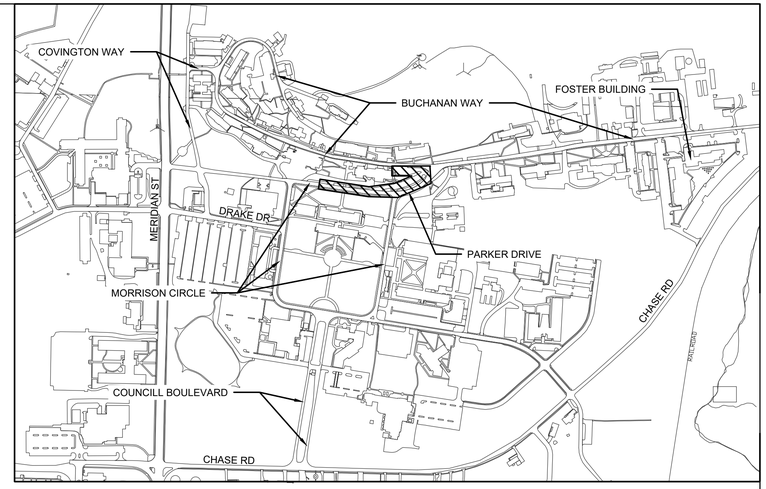

KEY MAP
NOT TO SCALE

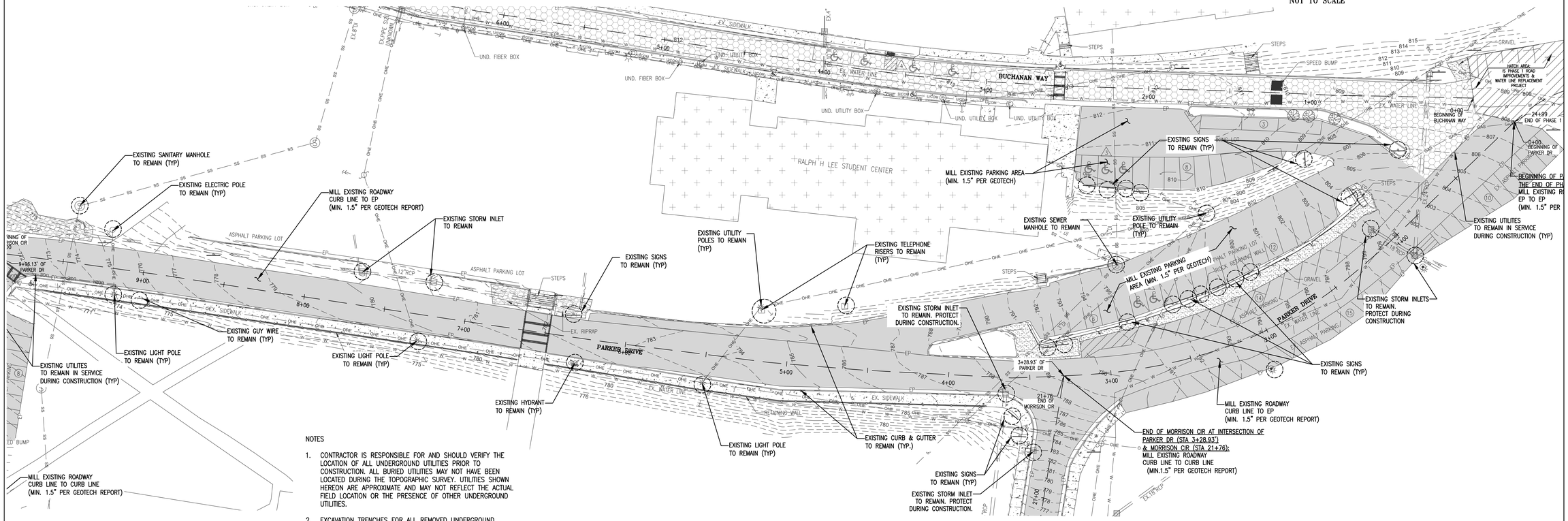

NOTES

1. CONTRACTOR IS RESPONSIBLE FOR AND SHOULD VERIFY THE LOCATION OF ALL UNDERGROUND UTILITIES PRIOR TO CONSTRUCTION. ALL BURIED UTILITIES MAY NOT HAVE BEEN LOCATED DURING THE TOPOGRAPHIC SURVEY. UTILITIES SHOWN HEREON ARE APPROXIMATE AND MAY NOT REFLECT THE ACTUAL FIELD LOCATION OR THE PRESENCE OF OTHER UNDERGROUND UTILITIES.
2. EXCAVATION TRENCHES FOR ALL REMOVED UNDERGROUND UTILITIES SHALL BE BACKFILLED IN ACCORDANCE WITH CIVIL SITE DETAILS FOR UNDERGROUND UTILITIES IN TRAFFIC AREAS.
3. CAUTION: CONTRACTOR SHALL EXERCISE EXTREME CAUTION WHEN WORKING ABOVE AND AROUND EXISTING UTILITIES.
4. ALL DEBRIS SHOULD BE HAULED OFF AND DISPOSED IN ACCORDANCE WITH ALL APPLICABLE STATE AND/OR CITY OF HUNTSVILLE RULES AND REGULATIONS.
5. CONTRACTOR SHALL PROVIDE ADEQUATE TRAFFIC CONTROL MEASURES IN ACCORDANCE WITH THE LATEST MANUAL OF UNIFORM TRAFFIC CONTROL DEVICES FOR AREAS WHERE VEHICLE ARE ENTERING PUBLIC ROADWAYS AND TO RESTRICT PEDESTRIAN AND VEHICULAR TRAFFIC FROM ENTERING THE WORK ZONE DURING CONSTRUCTION. THE CONTRACTOR SHALL BE RESPONSIBLE FOR JOBSITE SAFETY THROUGHOUT THE DURATION OF THE PROJECT.
6. PAVEMENT BUILD-UP RECOMMENDATIONS AND SOIL SUBGRADE REQUIREMENTS SHOWN IN THE GEOTECHNICAL ENGINEER'S REPORT SHALL TAKE PRECEDENCE OVER THESE PAVEMENT SPECIFICATIONS.
7. CONTRACTOR SHALL NOTIFY ENGINEER OF RECORD OF ANY DISCREPANCIES FOUND BETWEEN GEOTECHNICAL ENGINEER'S REPORT AND PLAN SET.

DEMOLITION LEGEND

X X X X	REMOVE EXISTING CURB & GUTTER
	MILL EXISTING ASPHALT PAVING FOR OVERLAY
	REMOVE EXISTING CONCRETE, ASPHALT OR STRUCTURE
	FULL PAVEMENT RE-BUILD
	REMOVE EXISTING TREE OR SIGN
	PRESERVE EXISTING TREE, SIGN OR FACILITY

N

SCALE IN FEET
1" = 30'

JOHNSON & ASSOCIATES
ENGINEERING SURVEYING
1218 CHURCH STREET
HUNTSVILLE, ALABAMA 35801
1-256-533-7331
FAX 1-256-533-7332

REVISIONS

no	date	description

ALABAMA
NO. 16185
PROFESSIONAL
ENGINEER
STEPHEN L. WALKER
02/14/2022
SEAL

PHASE II - ROAD IMPROVEMENTS, PARKING LOT REPAIRS
ALABAMA A&M UNIVERSITY

Charles Williams & Associates, Inc
ARCHITECTS
3601 8TH AVE. SOUTH
BIRMINGHAM, ALABAMA 35222
PH: 205-250-0700
FAX: 205-250-0515

SHEET TITLE:
DEMOLITION PLAN
PARKER DRIVE/PARKING LOT
PROJECT NUMBER:
CWA 2019-06B JA 1791EN
DATE:
02-14-2022
DRAWN BY:
ATC/RDH
CHECKED BY:
SW/ATC

SHEET NUMBER
C2.5

DEMOLITION LEGEND

- X X X X — REMOVE EXISTING CURB & GUTTER
- MILL EXISTING ASPHALT PAVING FOR OVERLAY
- REMOVE EXISTING CONCRETE, ASPHALT OR STRUCTURE
- FULL PAVEMENT RE-BUILD
- REMOVE EXISTING TREE OR SIGN
- PRESERVE EXISTING TREE, SIGN OR FACILITY

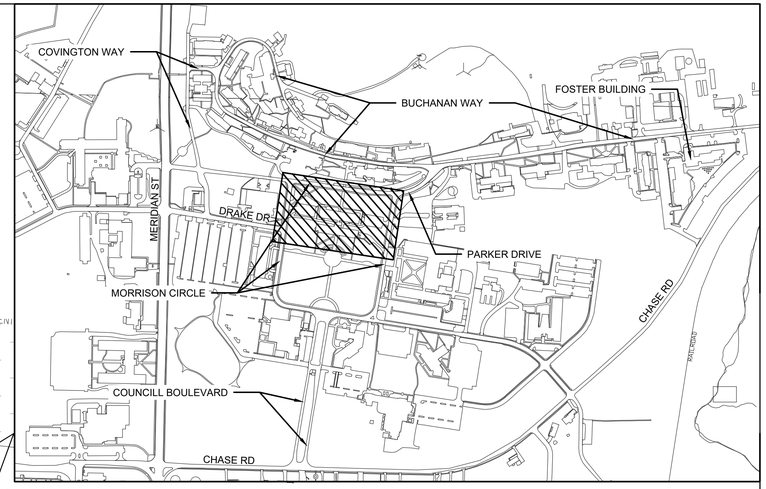

KEY MAP
NOT TO SCALE

BEGINNING OF MORRISON CIR AT INTERSECTION OF PARKER DR (STA 9+96.13') & MORRISON CIR (STA 0+00): MILL EXISTING ROADWAY CURB LINE TO CURB LINE (MIN.1.5" PER GEOTECH REPORT)

EXISTING SANITARY MANHOLE TO REMAIN (TYP)

EXISTING ELECTRIC POLE TO REMAIN (TYP)

MILL EXISTING ROADWAY CURB LINE TO EP (MIN. 1.5" PER GEOTECH REPORT)

EXISTING STORM INLET TO REMAIN

EXISTING UTILITY POLES TO REMAIN (TYP)

EXISTING SIGNS TO REMAIN (TYP)

EXISTING BOLLARDS TO REMAIN (TYP)

END OF PARKER DR (STA 10+35): MILL EXISTING ROADWAY CURB LINE TO EP (MIN. 1.5" PER GEOTECH REPORT)

REMOVE EXISTING SPEED BUMP

EXISTING UTILITES TO REMAIN IN SERVICE DURING CONSTRUCTION (TYP)

EXISTING LIGHT POLE TO REMAIN (TYP)

EXISTING GUY WIRE TO REMAIN (TYP)

EXISTING LIGHT POLE TO REMAIN (TYP)

EXISTING HYDRANT TO REMAIN (TYP)

EXISTING LIGHT POLE TO REMAIN (TYP)

EXISTING CURB & GUTTER TO REMAIN (TYP.)

EXISTING STORM INLET TO REMAIN. PROTECT DURING CONSTRUCTION.

EXISTING SIGNS TO REMAIN (TYP)

EXISTING STORM INLET TO REMAIN. PROTECT DURING CONSTRUCTION.

MILL EXISTING ROADWAY CURB LINE TO EP (MIN. 1.5" PER GEOTECH REPORT)

END OF MORRISON CIR AT INTERSECTION OF PARKER DR (STA 3+28.93') & MORRISON CIR (STA 21+76): MILL EXISTING ROADWAY CURB LINE TO CURB LINE (MIN.1.5" PER GEOTECH REPORT)

MILL EXISTING ROADWAY CURB LINE TO CURB LINE (MIN. 1.5" PER GEOTECH REPORT)

EXISTING ELECTRIC POLE TO REMAIN (TYP)

EXISTING CURB & GUTTER TO REMAIN (TYP.)

EXISTING UTILITES TO REMAIN IN SERVICE DURING CONSTRUCTION (TYP)

EXISTING LIGHT POLE TO REMAIN (TYP)

EXISTING ELECTRIC POLE TO REMAIN (TYP)

EXISTING HYDRANT TO REMAIN (TYP)

REMOVE EXISTING SPEED BUMP

EXISTING SIGN TO REMAIN (TYP)

EXISTING STORM INLET TO REMAIN. PROTECT DURING CONSTRUCTION.

EXISTING LIGHT POLE TO REMAIN (TYP)

MATCH LINE "A" MORRISON CIRCLE
MATCH LINE "B" MORRISON CIRCLE

EXISTING STORM INLET TO REMAIN

EXISTING TELEPHONE RISER TO REMAIN (TYP)

EXISTING CURB & GUTTER TO REMAIN (TYP.)

REMOVE EXISTING SPEED BUMP

EXISTING STORM INLET TO REMAIN. PROTECT DURING CONSTRUCTION.

EXISTING STORM INLET TO REMAIN

NOTES

1. CONTRACTOR IS RESPONSIBLE FOR AND SHOULD VERIFY THE LOCATION OF ALL UNDERGROUND UTILITIES PRIOR TO CONSTRUCTION. ALL BURIED UTILITIES MAY NOT HAVE BEEN LOCATED DURING THE TOPOGRAPHIC SURVEY. UTILITIES SHOWN HEREON ARE APPROXIMATE AND MAY NOT REFLECT THE ACTUAL FIELD LOCATION OR THE PRESENCE OF OTHER UNDERGROUND UTILITIES.
2. EXCAVATION TRENCHES FOR ALL REMOVED UNDERGROUND UTILITIES SHALL BE BACKFILLED IN ACCORDANCE WITH CIVIL SITE DETAILS FOR UNDERGROUND UTILITIES IN TRAFFIC AREAS.
3. CAUTION: CONTRACTOR SHALL EXERCISE EXTREME CAUTION WHEN WORKING ABOVE AND AROUND EXISTING UTILITIES.
4. ALL DEBRIS SHOULD BE HAULED OFF AND DISPOSED IN ACCORDANCE WITH ALL APPLICABLE STATE AND/OR CITY OF HUNTSVILLE RULES AND REGULATIONS.
5. CONTRACTOR SHALL PROVIDE ADEQUATE TRAFFIC CONTROL MEASURES IN ACCORDANCE WITH THE LATEST MANUAL OF UNIFORM TRAFFIC CONTROL DEVICES FOR AREAS WHERE VEHICLE ARE ENTERING PUBLIC ROADWAYS AND TO RESTRICT PEDESTRIAN AND VEHICULAR TRAFFIC FROM ENTERING THE WORK ZONE DURING CONSTRUCTION. THE CONTRACTOR SHALL BE RESPONSIBLE FOR JOBSITE SAFETY THROUGHOUT THE DURATION OF THE PROJECT.
6. PAVEMENT BUILD-UP RECOMMENDATIONS AND SOIL SUBGRADE REQUIREMENTS SHOWN IN THE GEOTECHNICAL ENGINEER'S REPORT SHALL TAKE PRECEDENCE OVER THESE PAVEMENT SPECIFICATIONS.
7. CONTRACTOR SHALL NOTIFY ENGINEER OF RECORD OF ANY DISCREPANCIES FOUND BETWEEN GEOTECHNICAL ENGINEER'S REPORT AND PLAN SET.

N

SCALE IN FEET
1" = 30'

JOHNSON & ASSOCIATES
ENGINEERING SURVEYING
1218 CHURCH STREET
HUNTSVILLE, ALABAMA 35801
1-256-533-7331
FAX 1-256-533-7332

REVISIONS

no	date	description

STEPHEN L. WALKER
NO. 16165
PROFESSIONAL ENGINEER
02/14/2022
SEAL

PHASE II - ROAD IMPROVEMENTS, PARKING LOT REPAIRS
ALABAMA A&M UNIVERSITY

Charles Williams & Associates, Inc
ARCHITECTS
3601 8TH AVE. SOUTH
BIRMINGHAM, ALABAMA 35222
PH: 205-250-0700
FAX: 205-250-0515

SHEET TITLE:
DEMOLITION PLAN
PARKER DR.-MORRISON CIR.

PROJECT NUMBER:
CWA 2019-06B JA 1791EN

DATE:
02-14-2022

DRAWN BY:
ATC/RDH

CHECKED BY:
SW/ATC

SHEET NUMBER
C2.6

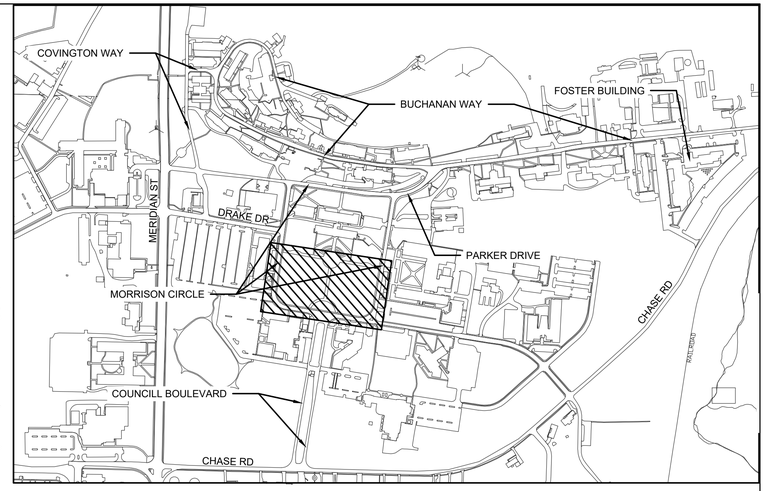

KEY MAP
NOT TO SCALE

MATCH LINE "A" MORRISON CIRCLE
MATCH LINE "B" MORRISON CIRCLE

EXISTING ELECTRIC POLE TO REMAIN (TYP)
EXISTING HYDRANT TO REMAIN (TYP)
REMOVE EXISTING SPEED BUMP
EXISTING SIGN TO REMAIN (TYP)
EXISTING STORM INLET TO REMAIN. PROTECT DURING CONSTRUCTION.
EXISTING LIGHT POLE TO REMAIN (TYP)
EXISTING UTILITES TO REMAIN IN SERVICE DURING CONSTRUCTION (TYP)
EXISTING LIGHT POLE TO REMAIN (TYP)
MILL EXISTING ROADWAY CURB LINE TO CURB LINE (MIN. 1.5" PER GEOTECH REPORT)
EXISTING SIGN TO REMAIN (TYP)
EXISTING LIGHT POLE TO REMAIN (TYP)
EXISTING CURB & GUTTER TO REMAIN (TYP.)
EXISTING LIGHT POLE TO REMAIN (TYP)
EXISTING STORM INLET TO REMAIN. PROTECT DURING CONSTRUCTION.
EXISTING WATER METER TO REMAIN (TYP)
EXISTING IRRIGATION VALVE TO REMAIN (TYP)
EXISTING LIGHT POLE TO REMAIN (TYP)
EXISTING STORM INLETS TO REMAIN. PROTECT DURING CONSTRUCTION.
MILL EXISTING ROADWAY FULL WIDTH
EXISTING WATER METER TO REMAIN (TYP)
EXISTING LIGHT POLE TO REMAIN (TYP)
REMOVE EXISTING SPEED BUMP
EXISTING UTILITES TO REMAIN IN SERVICE DURING CONSTRUCTION (TYP)
EXISTING SIGN TO REMAIN (TYP)
EXISTING UTILITES TO REMAIN IN SERVICE DURING CONSTRUCTION (TYP)
EXISTING STORM INLET TO REMAIN. PROTECT DURING CONSTRUCTION.
MILL EXISTING ROADWAY CURB LINE TO CURB LINE (MIN. 1.5" PER GEOTECH REPORT)
EXISTING LIGHT POLE TO REMAIN (TYP)
EXISTING CURB & GUTTER TO REMAIN (TYP.)
EXISTING TELEPHONE RISER TO REMAIN (TYP)
EXISTING SIGN TO REMAIN (TYP)
EXISTING LIGHT POLE TO REMAIN (TYP)
EXISTING STORM INLET TO REMAIN
EXISTING HYDRANT TO REMAIN (TYP)
EXISTING STORM INLET TO REMAIN. PROTECT DURING CONSTRUCTION.
EXISTING LIGHT POLE TO REMAIN (TYP)
EXISTING WATER METER TO REMAIN (TYP)
REMOVE EXISTING SPEED BUMP
SPEED BUMP
BUS STOP
ROCK RETAINING WALL
MORRISON CIRCLE
AKIMBO ROAD
END OF COUNCILL BLVD SOUTH LANE
END OF COUNCILL BLVD NORTH LANE
EX. SIDEWALK
EX. WATER LINE
EX. 8"DI SS
EX.30"RCP
24"RCP
18"RCP
48"RCP AS

NOTES

1. CONTRACTOR IS RESPONSIBLE FOR AND SHOULD VERIFY THE LOCATION OF ALL UNDERGROUND UTILITIES PRIOR TO CONSTRUCTION. ALL BURIED UTILITIES MAY NOT HAVE BEEN LOCATED DURING THE TOPOGRAPHIC SURVEY. UTILITIES SHOWN HEREON ARE APPROXIMATE AND MAY NOT REFLECT THE ACTUAL FIELD LOCATION OR THE PRESENCE OF OTHER UNDERGROUND UTILITIES.
2. EXCAVATION TRENCHES FOR ALL REMOVED UNDERGROUND UTILITIES SHALL BE BACKFILLED IN ACCORDANCE WITH CIVIL SITE DETAILS FOR UNDERGROUND UTILITIES IN TRAFFIC AREAS.
3. CAUTION: CONTRACTOR SHALL EXERCISE EXTREME CAUTION WHEN WORKING ABOVE AND AROUND EXISTING UTILITIES.
4. ALL DEBRIS SHOULD BE HAULED OFF AND DISPOSED IN ACCORDANCE WITH ALL APPLICABLE STATE AND/OR CITY OF HUNTSVILLE RULES AND REGULATIONS.
5. CONTRACTOR SHALL PROVIDE ADEQUATE TRAFFIC CONTROL MEASURES IN ACCORDANCE WITH THE LATEST MANUAL OF UNIFORM TRAFFIC CONTROL DEVICES FOR AREAS WHERE VEHICLE ARE ENTERING PUBLIC ROADWAYS AND TO RESTRICT PEDESTRIAN AND VEHICULAR TRAFFIC FROM ENTERING THE WORK ZONE DURING CONSTRUCTION. THE CONTRACTOR SHALL BE RESPONSIBLE FOR JOBSITE SAFETY THROUGHOUT THE DURATION OF THE PROJECT.
6. PAVEMENT BUILD-UP RECOMMENDATIONS AND SOIL SUBGRADE REQUIREMENTS SHOWN IN THE GEOTECHNICAL ENGINEER'S REPORT SHALL TAKE PRECEDENCE OVER THESE PAVEMENT SPECIFICATIONS.
7. CONTRACTOR SHALL NOTIFY ENGINEER OF RECORD OF ANY DISCREPANCIES FOUND BETWEEN GEOTECHNICAL ENGINEER'S REPORT AND PLAN SET.

DEMOLITION LEGEND

- X X X X — REMOVE EXISTING CURB & GUTTER
- MILL EXISTING ASPHALT PAVING FOR OVERLAY
- REMOVE EXISTING CONCRETE, ASPHALT OR STRUCTURE
- FULL PAVEMENT RE-BUILD
- REMOVE EXISTING TREE OR SIGN
- PRESERVE EXISTING TREE, SIGN OR FACILITY

N

SCALE IN FEET
1" = 30'

JOHNSON & ASSOCIATES
ENGINEERING SURVEYING
1218 CHURCH STREET
HUNTSVILLE, ALABAMA 35801
1-256-533-7331
FAX 1-256-533-7332

REVISIONS

no.	date	description

STATE OF ALABAMA
STEPHEN L. WALKER
NO. 16165
PROFESSIONAL ENGINEER
02/14/2022
SEAL

PHASE II - ROAD IMPROVEMENTS, PARKING LOT REPAIRS
ALABAMA A&M UNIVERSITY

Charles Williams & Associates, Inc
ARCHITECTS
3601 8TH AVE. SOUTH
BIRMINGHAM, ALABAMA 35222
PH: 205-250-0700
FAX: 205-250-0515

SHEET TITLE: DEMOLITION PLAN
MORRISON CIRCLE
PROJECT NUMBER: CWA 2019-06B JA 1791EN
DATE: 02-14-2022
DRAWN BY: ATC/RDH
CHECKED BY: SW/ATC

SHEET NUMBER
C2.7

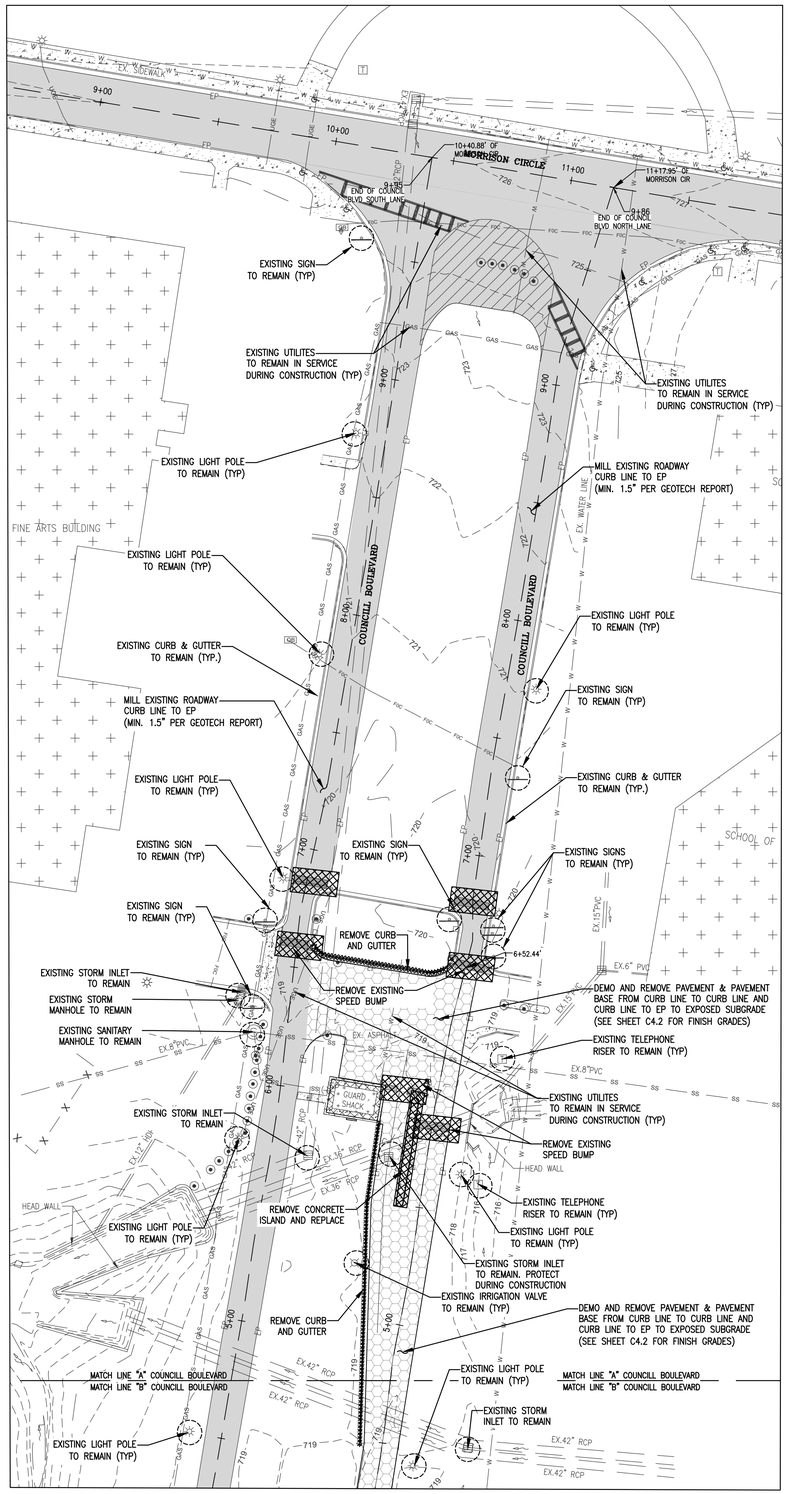

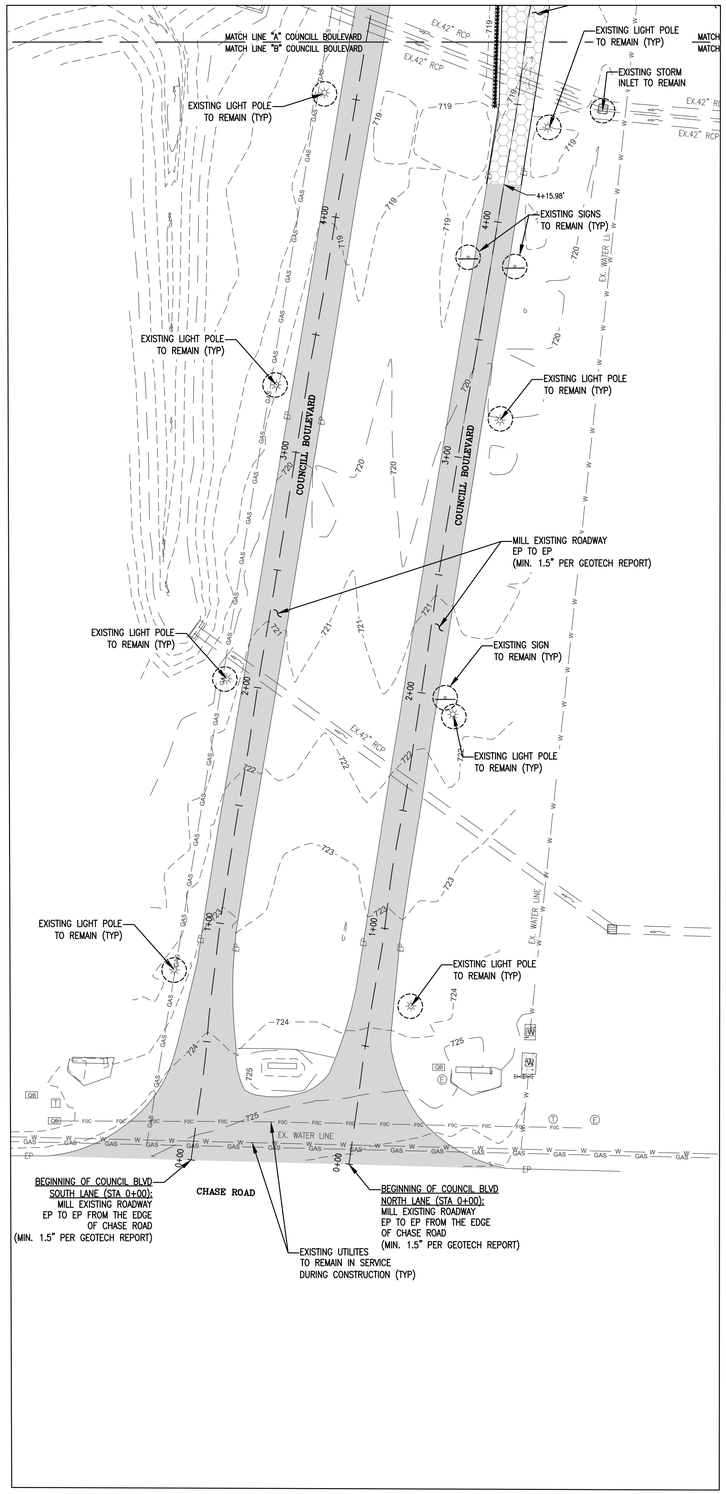

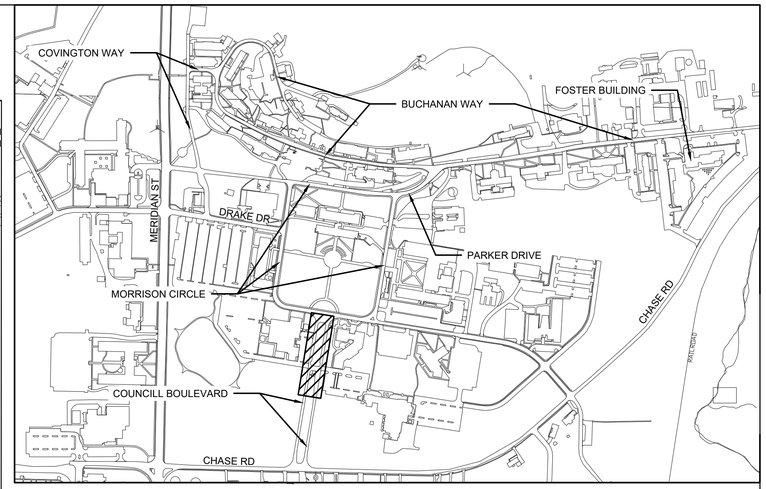

KEY MAP
NOT TO SCALE

NOTES

1. CONTRACTOR IS RESPONSIBLE FOR AND SHOULD VERIFY THE LOCATION OF ALL UNDERGROUND UTILITIES PRIOR TO CONSTRUCTION. ALL BURIED UTILITIES MAY NOT HAVE BEEN LOCATED DURING THE TOPOGRAPHIC SURVEY. UTILITIES SHOWN HEREON ARE APPROXIMATE AND MAY NOT REFLECT THE ACTUAL FIELD LOCATION OR THE PRESENCE OF OTHER UNDERGROUND UTILITIES.
2. EXCAVATION TRENCHES FOR ALL REMOVED UNDERGROUND UTILITIES SHALL BE BACKFILLED IN ACCORDANCE WITH CIVIL SITE DETAILS FOR UNDERGROUND UTILITIES IN TRAFFIC AREAS.
3. CAUTION: CONTRACTOR SHALL EXERCISE EXTREME CAUTION WHEN WORKING ABOVE AND AROUND EXISTING UTILITIES.
4. ALL DEBRIS SHOULD BE HAULED OFF AND DISPOSED IN ACCORDANCE WITH ALL APPLICABLE STATE AND/OR CITY OF HUNTSVILLE RULES AND REGULATIONS.
5. CONTRACTOR SHALL PROVIDE ADEQUATE TRAFFIC CONTROL MEASURES IN ACCORDANCE WITH THE LATEST MANUAL OF UNIFORM TRAFFIC CONTROL DEVICES FOR AREAS WHERE VEHICLE ARE ENTERING PUBLIC ROADWAYS AND TO RESTRICT PEDESTRIAN AND VEHICULAR TRAFFIC FROM ENTERING THE WORK ZONE DURING CONSTRUCTION. THE CONTRACTOR SHALL BE RESPONSIBLE FOR JOBSITE SAFETY THROUGHOUT THE DURATION OF THE PROJECT.
6. PAVEMENT BUILD-UP RECOMMENDATIONS AND SOIL SUBGRADE REQUIREMENTS SHOWN IN THE GEOTECHNICAL ENGINEER'S REPORT SHALL TAKE PRECEDENCE OVER THESE PAVEMENT SPECIFICATIONS.
7. CONTRACTOR SHALL NOTIFY ENGINEER OF RECORD OF ANY DISCREPANCIES FOUND BETWEEN GEOTECHNICAL ENGINEER'S REPORT AND PLAN SET.

DEMOLITION LEGEND

- X X X X — REMOVE EXISTING CURB & GUTTER
- MILL EXISTING ASPHALT PAVING FOR OVERLAY
- REMOVE EXISTING CONCRETE, ASPHALT OR STRUCTURE
- FULL PAVEMENT RE-BUILD
- REMOVE EXISTING TREE OR SIGN
- PRESERVE EXISTING TREE, SIGN OR FACILITY

N

SCALE IN FEET
1" = 30'

JOHNSON & ASSOCIATES
ENGINEERING SURVEYING
1218 CHURCH STREET
HUNTSVILLE, ALABAMA 35801
1-256-533-7331
FAX 1-256-533-7332

REVISIONS

no.	date	description

STATE OF ALABAMA
NO. 16165
PROFESSIONAL ENGINEER
STEPHEN L. WALKER
02/14/2022
SEAL

PHASE II - ROAD IMPROVEMENTS, PARKING LOT REPAIRS
ALABAMA A&M UNIVERSITY

Charles Williams & Associates, Inc
ARCHITECTS
3601 6TH AVE. SOUTH
BIRMINGHAM, ALABAMA 35222
PH: 205-250-0700
FAX: 205-250-0515

SHEET TITLE:
DEMOLITION PLAN
COUNCILL BOULEVARD

PROJECT NUMBER:
CWA 2019-06B JA 1791EN

DATE:
02-14-2022

DRAWN BY:
ATC/RDH

CHECKED BY:
SW/ATC

SHEET NUMBER
C2.8

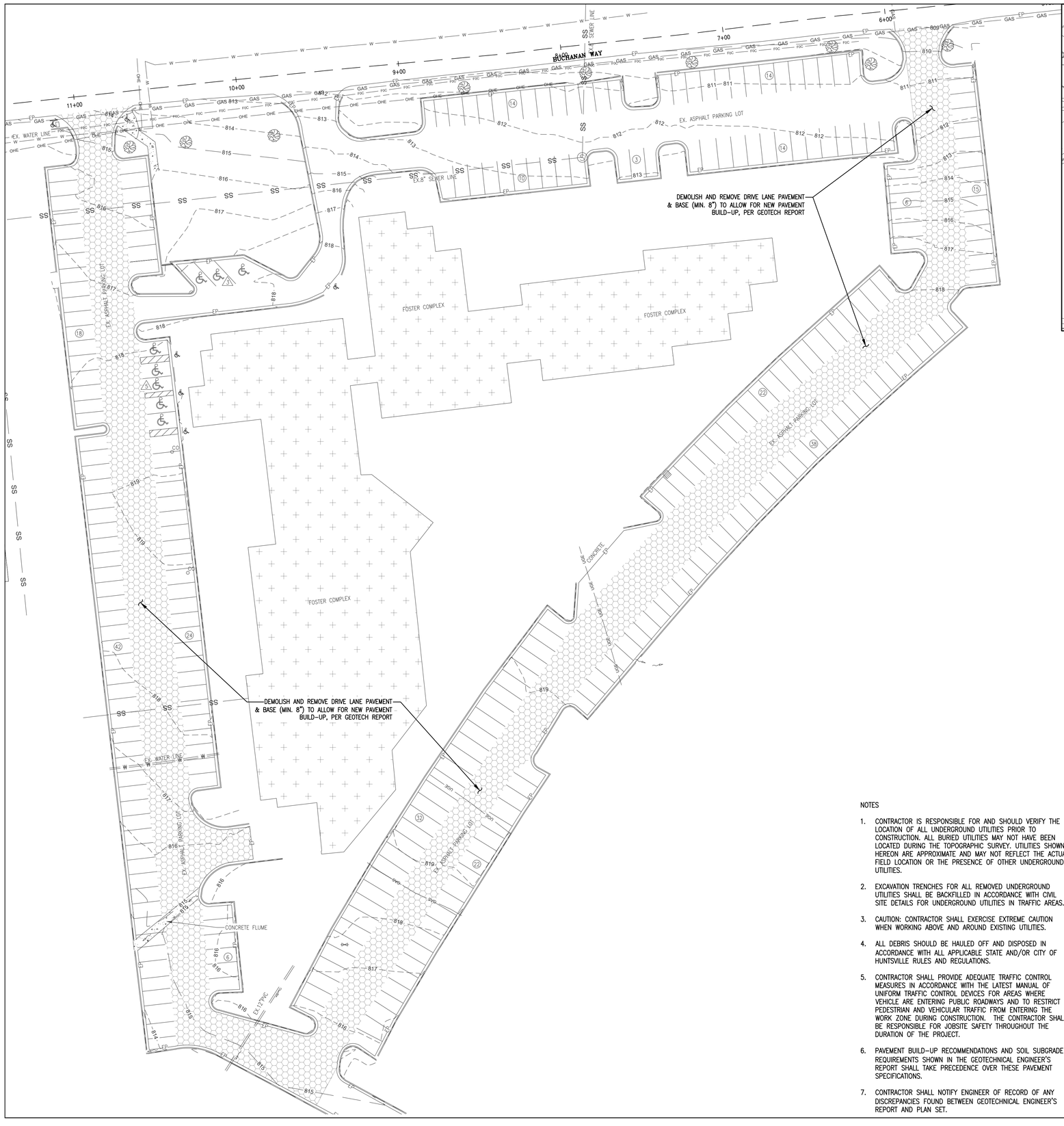

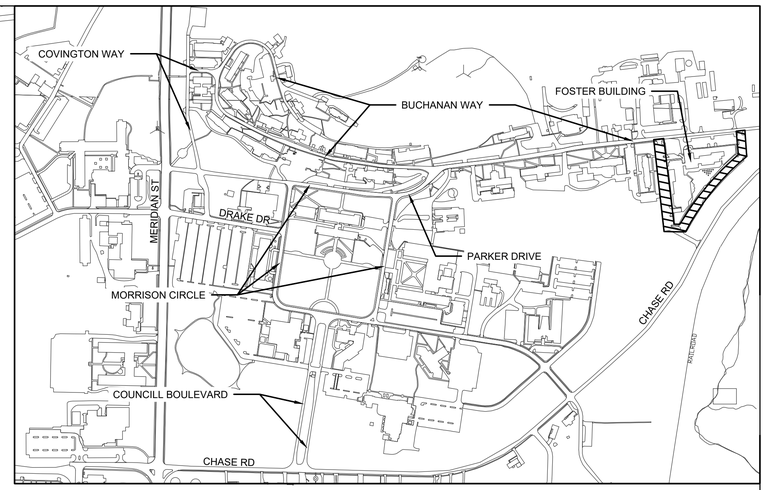

KEY MAP
NOT TO SCALE

NOTES

1. CONTRACTOR IS RESPONSIBLE FOR AND SHOULD VERIFY THE LOCATION OF ALL UNDERGROUND UTILITIES PRIOR TO CONSTRUCTION. ALL BURIED UTILITIES MAY NOT HAVE BEEN LOCATED DURING THE TOPOGRAPHIC SURVEY. UTILITIES SHOWN HEREON ARE APPROXIMATE AND MAY NOT REFLECT THE ACTUAL FIELD LOCATION OR THE PRESENCE OF OTHER UNDERGROUND UTILITIES.
2. EXCAVATION TRENCHES FOR ALL REMOVED UNDERGROUND UTILITIES SHALL BE BACKFILLED IN ACCORDANCE WITH CIVIL SITE DETAILS FOR UNDERGROUND UTILITIES IN TRAFFIC AREAS.
3. CAUTION: CONTRACTOR SHALL EXERCISE EXTREME CAUTION WHEN WORKING ABOVE AND AROUND EXISTING UTILITIES.
4. ALL DEBRIS SHOULD BE HAULED OFF AND DISPOSED IN ACCORDANCE WITH ALL APPLICABLE STATE AND/OR CITY OF HUNTSVILLE RULES AND REGULATIONS.
5. CONTRACTOR SHALL PROVIDE ADEQUATE TRAFFIC CONTROL MEASURES IN ACCORDANCE WITH THE LATEST MANUAL OF UNIFORM TRAFFIC CONTROL DEVICES FOR AREAS WHERE VEHICLE ARE ENTERING PUBLIC ROADWAYS AND TO RESTRICT PEDESTRIAN AND VEHICULAR TRAFFIC FROM ENTERING THE WORK ZONE DURING CONSTRUCTION. THE CONTRACTOR SHALL BE RESPONSIBLE FOR JOBSITE SAFETY THROUGHOUT THE DURATION OF THE PROJECT.
6. PAVEMENT BUILD-UP RECOMMENDATIONS AND SOIL SUBGRADE REQUIREMENTS SHOWN IN THE GEOTECHNICAL ENGINEER'S REPORT SHALL TAKE PRECEDENCE OVER THESE PAVEMENT SPECIFICATIONS.
7. CONTRACTOR SHALL NOTIFY ENGINEER OF RECORD OF ANY DISCREPANCIES FOUND BETWEEN GEOTECHNICAL ENGINEER'S REPORT AND PLAN SET.

DEMOLITION LEGEND

X X X X	REMOVE EXISTING CURB & GUTTER
	MILL EXISTING ASPHALT PAVING FOR OVERLAY
	REMOVE EXISTING CONCRETE, ASPHALT OR STRUCTURE
	FULL PAVEMENT RE-BUILD
	REMOVE EXISTING TREE OR SIGN
	PRESERVE EXISTING TREE, SIGN OR FACILITY

N

SCALE IN FEET
-15 0 15 30 60
1" = 30'

JOHNSON & ASSOCIATES
ENGINEERING SURVEYING
1218 CHURCH STREET
HUNTSVILLE, ALABAMA 35801
1-256-533-7331
FAX 1-256-533-7332

REVISIONS

no.	date	description

STEPHEN L. WALKER
NO. 16165
PROFESSIONAL ENGINEER
ALABAMA
02/14/2022
SEAL

PHASE II - ROAD IMPROVEMENTS, PARKING LOT REPAIRS
ALABAMA A&M UNIVERSITY

Charles Williams & Associates, Inc
ARCHITECTS
3601 8TH AVE. SOUTH
BIRMINGHAM, ALABAMA 35222
PH: 205-250-0700
FAX: 205-250-0515

SHEET TITLE:
DEMOLITION PLAN
FOSTER CENTER DRIVE

PROJECT NUMBER:
CWA 2019-06B JA 1791EN

DATE:
02-14-2022

DRAWN BY:
ATC/RDH

CHECKED BY:
SW/ATC

SHEET NUMBER
C2.9

NOTES:

1. THIS PROPERTY IS LOCATED IN SECTION 18, TOWNSHIP 3 SOUTH, RANGE 1 EAST, WITHIN THE CITY LIMITS OF HUNTSVILLE, MADISON COUNTY, ALABAMA.
2. THE ADDRESS FOR THIS PROPERTY IS 4900 MERIDIAN STREET, HUNTSVILLE, AL 35811.
3. ALL DIMENSIONS ARE GIVEN TO THE BACK OF CURB UNLESS OTHERWISE SHOWN.
4. CONTRACTOR SHOULD VERIFY THE LOCATIONS OF ALL UNDERGROUND UTILITIES PRIOR TO CONSTRUCTION, UTILITIES SHOWN HEREON ARE APPROXIMATE AND MAY NOT REFLECT THE ACTUAL FIELD LOCATION OR THE PRESENCE OF OTHER UNDERGROUND UTILITIES.
5. IF ADVERSE CONDITIONS ON-SITE ARE UNCOVERED DURING CONSTRUCTION, THE DESIGN ENGINEER MUST BE NOTIFIED IN WRITING IMMEDIATELY. THE DESIGN ENGINEER MAY REQUIRE MODIFICATION OF THESE PLANS TO THE EXTENT NECESSARY TO ASSURE COMPLIANCE WITH THE CITY'S CONSTRUCTION SPECIFICATIONS MANUAL.
6. ALL TRAFFIC CONTROL DEVICES SHALL BE ERECTED AND MAINTAINED IN CONFORMANCE WITH THE MANUAL ON UNIFORM TRAFFIC CONTROL DEVICES, LATEST EDITION.
7. TRENCH SAFETY SYSTEMS TO MEET, AS A MINIMUM, THE REQUIREMENTS OF OSHA SAFETY AND HEALTH REGULATION PART 1926.
8. A TREE REMOVAL PERMIT MAY BE REQUIRED. THE CONTRACTOR SHALL OBTAIN SUCH PERMIT, IF REQUIRED
9. CONTRACTOR SHALL CONTACT ALABAMA ONE CALL AT 811 FOR UTILITY LOCATIONS PRIOR TO ANY SITE EXCAVATION.
10. PAVEMENT BUILD-UP RECOMMENDATIONS AND SOIL SUBGRADE REQUIREMENTS SHOWN IN THE GEOTECHNICAL ENGINEER'S REPORT SHALL TAKE PRECEDENCE OVER THESE PAVEMENT SPECIFICATIONS.
11. CONTRACTOR SHALL NOTIFY ENGINEER OF RECORD OF ANY DISCREPANCIES FOUND BETWEEN GEOTECHNICAL ENGINEER'S REPORT AND PLAN SET.
12. ALL MILLING IS 1.5" ENGINEER WILL NEED TO ASSESS THE CONDITION OF THE PAVEMENT AFTER IT IS MILLED TO DETERMINE IF FULL DEPTH REBUILD IS NEEDED FOR THOSE AREAS.
13. CONTRACTOR IS TO REPAIR ANY VALUES OR STRUCTURES THAT ARE DAMAGED OR FOUND DAMAGED DURING CONSTRUCTION. ALL VALUES AND STRUCTURES DAMAGED OR UNCOVERED WILL NEED TO BE SET TO FINISH GRADE.
14. ALL EXISTING CURB & GUTTER TO REMAIN, EXCEPT WHERE IT IS SHOWN TO REPAIR OR REPLACE.
15. ALL EXISTING STRIPPING AND MARKINGS IN ROAD WAYS OR PARKING LOTS TO BE REPLACE.

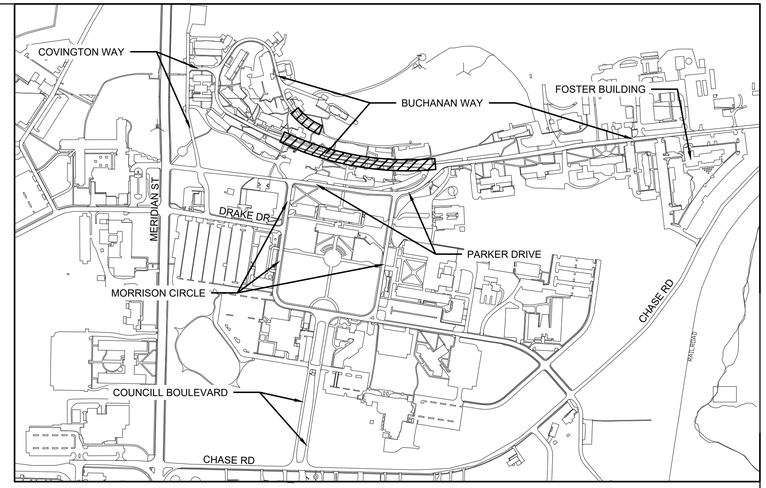

KEY MAP
NOT TO SCALE

IF OPEN CRACKS GREATER THAN 1/8" WIDE ARE STILL PRESENT AFTER MILLING, THE CRACKS ARE TO BE CLEANED OUT TO THE EXTENT PRACTICAL AND FILLED WITH LIQUID ASPHALT

LEGEND

DETAIL #1 ON SHEET C8.1	1 C8.1
NUMBER OF PARKING SPOTS	(10)
STANDARD CURB & GUTTER	
SPILL CURB & GUTTER	
CONCRETE PAVEMENT	
MILL & RE-PAVE	
FULL PAVEMENT RE-BUILD	
SIGN	
BENCHMARK	

N

SCALE IN FEET
1" = 30'

JOHNSON & ASSOCIATES
ENGINEERING SURVEYING
1218 CHURCH STREET
HUNTSVILLE, ALABAMA 35801
1-256-533-7331
FAX 1-256-533-7332

REVISIONS		
no.	date	description

STATE OF ALABAMA
STEPHEN L. WALKER
NO. 16165
PROFESSIONAL ENGINEER
02/14/2022
SEAL

PHASE II - ROAD IMPROVEMENTS, PARKING LOT REPAIRS

ALABAMA A&M UNIVERSITY

Charles Williams & Associates, Inc
ARCHITECTS
3601 8TH AVE. SOUTH
BIRMINGHAM, ALABAMA 35222
PH: 205-250-0700
FAX: 205-250-0515

SHEET TITLE:
LAYOUT PLAN
BUCHANAN WAY 1

PROJECT NUMBER:
CWA 2019-06B JA 1791EN

DATE:
02-14-2022

DRAWN BY:
ATC/RDH

CHECKED BY:
SW/ATC

SHEET NUMBER
C3.1

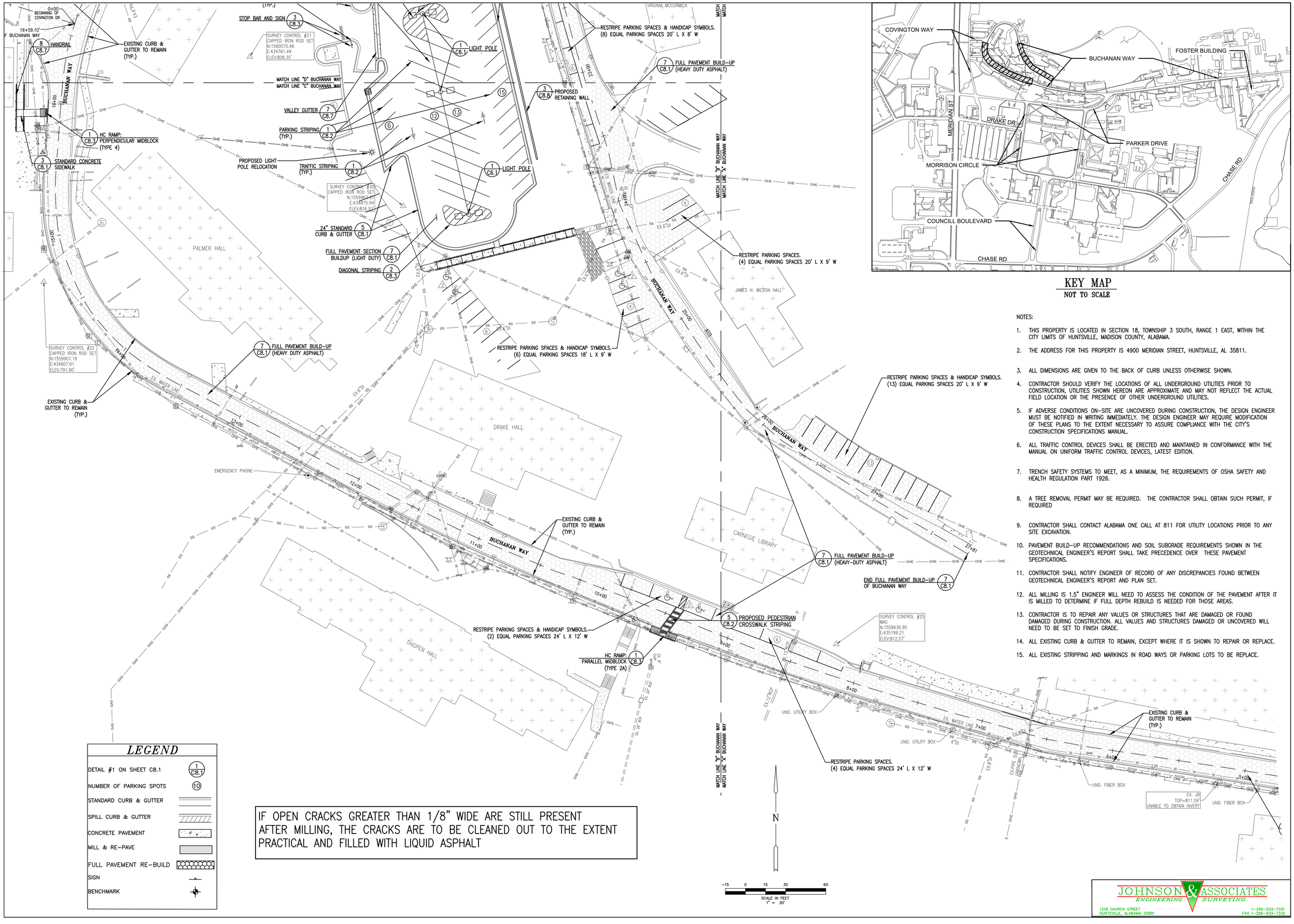

KEY MAP
NOT TO SCALE

LEGEND

DETAIL #1 ON SHEET C8.1	1 C8.1
NUMBER OF PARKING SPOTS	10
STANDARD CURB & GUTTER	
SPILL CURB & GUTTER	
CONCRETE PAVEMENT	
MILL & RE-PAVE	
FULL PAVEMENT RE-BUILD	
SIGN	
BENCHMARK	

IF OPEN CRACKS GREATER THAN 1/8" WIDE ARE STILL PRESENT AFTER MILLING, THE CRACKS ARE TO BE CLEANED OUT TO THE EXTENT PRACTICAL AND FILLED WITH LIQUID ASPHALT

NOTES:

1. THIS PROPERTY IS LOCATED IN SECTION 18, TOWNSHIP 3 SOUTH, RANGE 1 EAST, WITHIN THE CITY LIMITS OF HUNTSVILLE, MADISON COUNTY, ALABAMA.
2. THE ADDRESS FOR THIS PROPERTY IS 4900 MERIDIAN STREET, HUNTSVILLE, AL 35811.
3. ALL DIMENSIONS ARE GIVEN TO THE BACK OF CURB UNLESS OTHERWISE SHOWN.
4. CONTRACTOR SHOULD VERIFY THE LOCATIONS OF ALL UNDERGROUND UTILITIES PRIOR TO CONSTRUCTION, UTILITIES SHOWN HEREON ARE APPROXIMATE AND MAY NOT REFLECT THE ACTUAL FIELD LOCATION OR THE PRESENCE OF OTHER UNDERGROUND UTILITIES.
5. IF ADVERSE CONDITIONS ON-SITE ARE UNCOVERED DURING CONSTRUCTION, THE DESIGN ENGINEER MUST BE NOTIFIED IN WRITING IMMEDIATELY. THE DESIGN ENGINEER MAY REQUIRE MODIFICATION OF THESE PLANS TO THE EXTENT NECESSARY TO ASSURE COMPLIANCE WITH THE CITY'S CONSTRUCTION SPECIFICATIONS MANUAL.
6. ALL TRAFFIC CONTROL DEVICES SHALL BE ERECTED AND MAINTAINED IN CONFORMANCE WITH THE MANUAL ON UNIFORM TRAFFIC CONTROL DEVICES, LATEST EDITION.
7. TRENCH SAFETY SYSTEMS TO MEET, AS A MINIMUM, THE REQUIREMENTS OF OSHA SAFETY AND HEALTH REGULATION PART 1926.
8. A TREE REMOVAL PERMIT MAY BE REQUIRED. THE CONTRACTOR SHALL OBTAIN SUCH PERMIT, IF REQUIRED
9. CONTRACTOR SHALL CONTACT ALABAMA ONE CALL AT 811 FOR UTILITY LOCATIONS PRIOR TO ANY SITE EXCAVATION.
10. PAVEMENT BUILD-UP RECOMMENDATIONS AND SOIL SUBGRADE REQUIREMENTS SHOWN IN THE GEOTECHNICAL ENGINEER'S REPORT SHALL TAKE PRECEDENCE OVER THESE PAVEMENT SPECIFICATIONS.
11. CONTRACTOR SHALL NOTIFY ENGINEER OF RECORD OF ANY DISCREPANCIES FOUND BETWEEN GEOTECHNICAL ENGINEER'S REPORT AND PLAN SET.
12. ALL MILLING IS 1.5" ENGINEER WILL NEED TO ASSESS THE CONDITION OF THE PAVEMENT AFTER IT IS MILLED TO DETERMINE IF FULL DEPTH REBUILD IS NEEDED FOR THOSE AREAS.
13. CONTRACTOR IS TO REPAIR ANY VALVES OR STRUCTURES THAT ARE DAMAGED OR FOUND DAMAGED DURING CONSTRUCTION. ALL VALVES AND STRUCTURES DAMAGED OR UNCOVERED WILL NEED TO BE SET TO FINISH GRADE.
14. ALL EXISTING CURB & GUTTER TO REMAIN, EXCEPT WHERE IT IS SHOWN TO REPAIR OR REPLACE.
15. ALL EXISTING STRIPPING AND MARKINGS IN ROAD WAYS OR PARKING LOTS TO BE REPLACE.

REVISIONS

no.	date	description

ALABAMA
NO. 16185 PROFESSIONAL ENGINEER
STEPHEN L. WALKER
02/14/2022
SEAL

PHASE II - ROAD IMPROVEMENTS, PARKING LOT REPAIRS
ALABAMA A&M UNIVERSITY

Charles Williams & Associates, Inc ARCHITECTS
3601 8TH AVE. SOUTH
BIRMINGHAM, ALABAMA 35222
PH: 205-250-0700
FAX: 205-250-0515

SHEET TITLE: LAYOUT PLAN
BUCHANAN WAY 2
PROJECT NUMBER: CWA 2019-06B JA 1791EN
DATE: 02-14-2022
DRAWN BY: ATC/RDH
CHECKED BY: SW/ATC

SHEET NUMBER
C3.2

JOHNSON & ASSOCIATES
ENGINEERING SURVEYING
1218 CHURCH STREET
HUNTSVILLE, ALABAMA 35801
T: 1-256-533-7331
FAX 1-256-533-7332

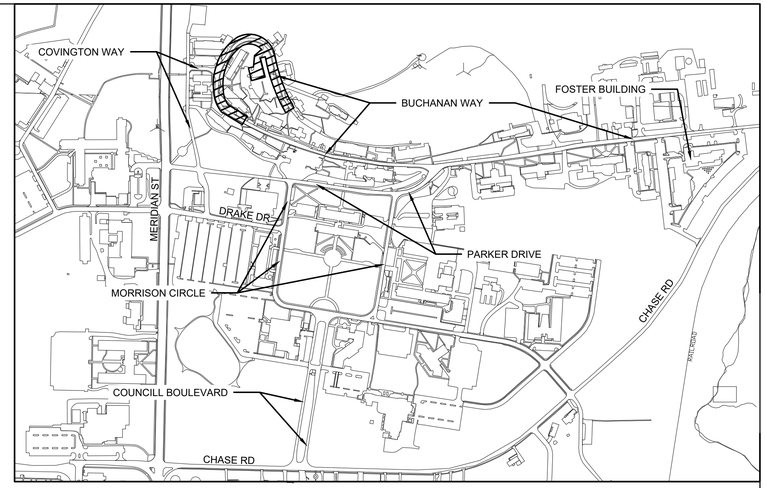

KEY MAP
NOT TO SCALE

NOTES:

1. THIS PROPERTY IS LOCATED IN SECTION 18, TOWNSHIP 3 SOUTH, RANGE 1 EAST, WITHIN THE CITY LIMITS OF HUNTSVILLE, MADISON COUNTY, ALABAMA.
2. THE ADDRESS FOR THIS PROPERTY IS 4900 MERIDIAN STREET, HUNTSVILLE, AL 35811.
3. ALL DIMENSIONS ARE GIVEN TO THE BACK OF CURB UNLESS OTHERWISE SHOWN.
4. CONTRACTOR SHOULD VERIFY THE LOCATIONS OF ALL UNDERGROUND UTILITIES PRIOR TO CONSTRUCTION, UTILITIES SHOWN HEREON ARE APPROXIMATE AND MAY NOT REFLECT THE ACTUAL FIELD LOCATION OR THE PRESENCE OF OTHER UNDERGROUND UTILITIES.
5. IF ADVERSE CONDITIONS ON-SITE ARE UNCOVERED DURING CONSTRUCTION, THE DESIGN ENGINEER MUST BE NOTIFIED IN WRITING IMMEDIATELY. THE DESIGN ENGINEER MAY REQUIRE MODIFICATION OF THESE PLANS TO THE EXTENT NECESSARY TO ASSURE COMPLIANCE WITH THE CITY'S CONSTRUCTION SPECIFICATIONS MANUAL.
6. ALL TRAFFIC CONTROL DEVICES SHALL BE ERECTED AND MAINTAINED IN CONFORMANCE WITH THE MANUAL ON UNIFORM TRAFFIC CONTROL DEVICES, LATEST EDITION.
7. TRENCH SAFETY SYSTEMS TO MEET, AS A MINIMUM, THE REQUIREMENTS OF OSHA SAFETY AND HEALTH REGULATION PART 1926.
8. A TREE REMOVAL PERMIT MAY BE REQUIRED. THE CONTRACTOR SHALL OBTAIN SUCH PERMIT, IF REQUIRED
9. CONTRACTOR SHALL CONTACT ALABAMA ONE CALL AT 811 FOR UTILITY LOCATIONS PRIOR TO ANY SITE EXCAVATION.
10. PAVEMENT BUILD-UP RECOMMENDATIONS AND SOIL SUBGRADE REQUIREMENTS SHOWN IN THE GEOTECHNICAL ENGINEER'S REPORT SHALL TAKE PRECEDENCE OVER THESE PAVEMENT SPECIFICATIONS.
11. CONTRACTOR SHALL NOTIFY ENGINEER OF RECORD OF ANY DISCREPANCIES FOUND BETWEEN GEOTECHNICAL ENGINEER'S REPORT AND PLAN SET.
12. ALL MILLING IS 1.5" ENGINEER WILL NEED TO ASSESS THE CONDITION OF THE PAVEMENT AFTER IT IS MILLED TO DETERMINE IF FULL DEPTH REBUILD IS NEEDED FOR THOSE AREAS.
13. CONTRACTOR IS TO REPAIR ANY VALUES OR STRUCTURES THAT ARE DAMAGED OR FOUND DAMAGED DURING CONSTRUCTION. ALL VALUES AND STRUCTURES DAMAGED OR UNCOVERED WILL NEED TO BE SET TO FINISH GRADE.
14. ALL EXISTING CURB & GUTTER TO REMAIN, EXCEPT WHERE IT IS SHOWN TO REPAIR OR REPLACE.
15. ALL EXISTING STRIPPING AND MARKINGS IN ROAD WAYS OR PARKING LOTS TO BE REPLACE.

IF OPEN CRACKS GREATER THAN 1/8" WIDE ARE STILL PRESENT AFTER MILLING, THE CRACKS ARE TO BE CLEANED OUT TO THE EXTENT PRACTICAL AND FILLED WITH LIQUID ASPHALT

LEGEND

- DETAIL #1 ON SHEET 800 — 1 / C8.1
- NUMBER OF PARKING SPOTS — (10)
- STANDARD CURB & GUTTER
- SPILL CURB & GUTTER
- CONCRETE PAVEMENT
- MILL & RE-PAVE
- FULL PAVEMENT RE-BUILD
- SIGN
- BENCHMARK
- NEW LED LIGHT POLE & FIXTURE

N

SCALE IN FEET
1" = 30'

PHASE II - ROAD IMPROVEMENTS, PARKING LOT REPAIRS
ALABAMA A&M UNIVERSITY

REVISIONS

no.	date	description

ALABAMA
STEPHEN L. WALKER
NO. 16165
PROFESSIONAL
ENGINEER
02/14/2022
SEAL

Charles Williams & Associates, Inc
ARCHITECTS
3601 8TH AVE. SOUTH
BIRMINGHAM, ALABAMA 35222
PH: 205-250-0700
FAX: 205-250-0515

SHEET TITLE:
LAYOUT PLAN
BUCHANAN WAY 3
PROJECT NUMBER:
CWA 2019-06B JA 1791EN
DATE:
02-14-2022
DRAWN BY:
ATC/RDH
CHECKED BY:
SW/ATC

SHEET NUMBER
C3.3

JOHNSON & ASSOCIATES
ENGINEERING SURVEYING
1218 CHURCH STREET
HUNTSVILLE, ALABAMA 35801
T-256-533-7331
FAX T-256-533-7332

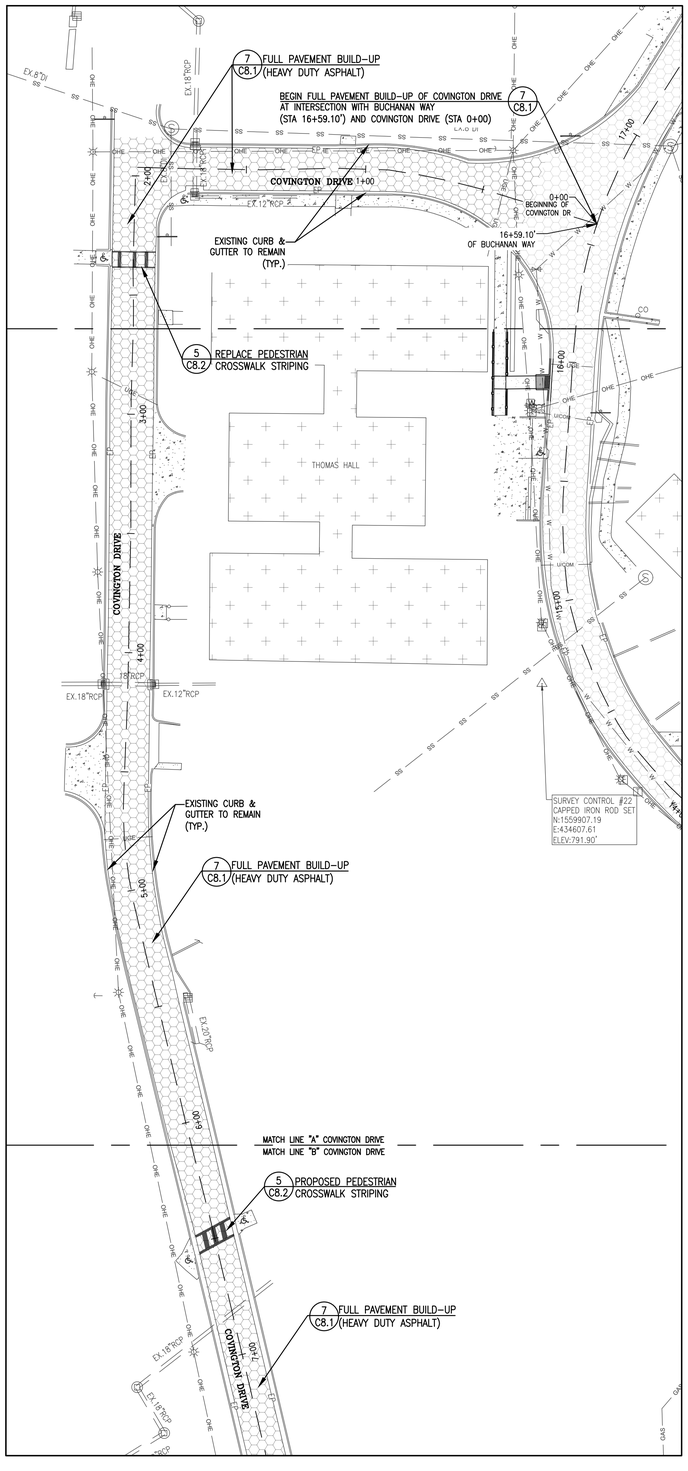

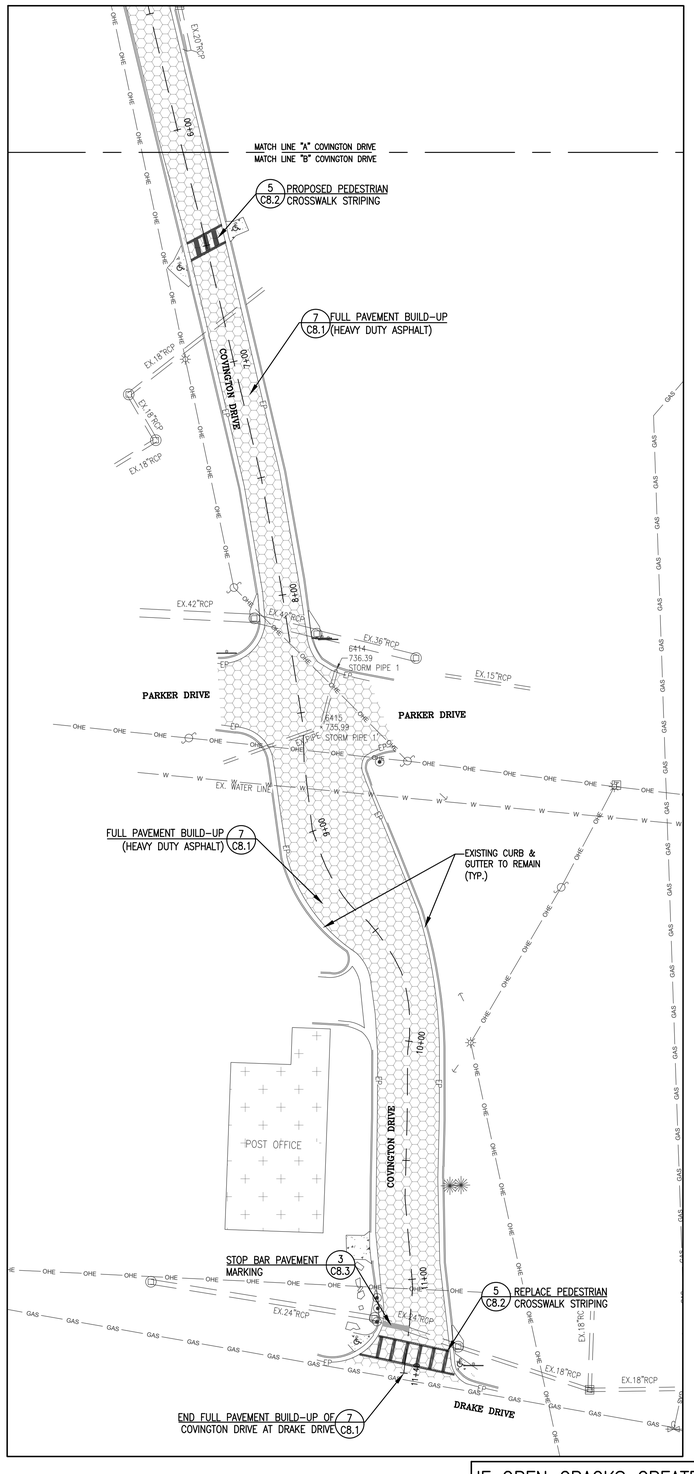

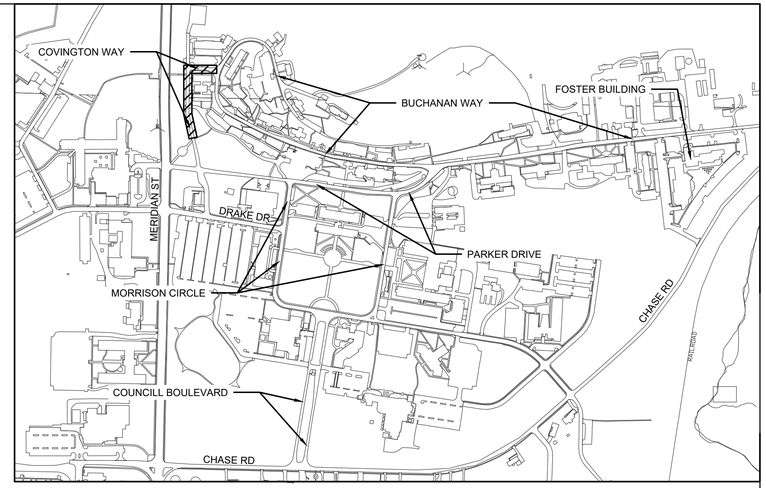

KEY MAP
NOT TO SCALE

NOTES:

1. THIS PROPERTY IS LOCATED IN SECTION 18, TOWNSHIP 3 SOUTH, RANGE 1 EAST, WITHIN THE CITY LIMITS OF HUNTSVILLE, MADISON COUNTY, ALABAMA.
2. THE ADDRESS FOR THIS PROPERTY IS 4900 MERIDIAN STREET, HUNTSVILLE, AL 35811.
3. ALL DIMENSIONS ARE GIVEN TO THE BACK OF CURB UNLESS OTHERWISE SHOWN.
4. CONTRACTOR SHOULD VERIFY THE LOCATIONS OF ALL UNDERGROUND UTILITIES PRIOR TO CONSTRUCTION, UTILITIES SHOWN HEREON ARE APPROXIMATE AND MAY NOT REFLECT THE ACTUAL FIELD LOCATION OR THE PRESENCE OF OTHER UNDERGROUND UTILITIES.
5. IF ADVERSE CONDITIONS ON-SITE ARE UNCOVERED DURING CONSTRUCTION, THE DESIGN ENGINEER MUST BE NOTIFIED IN WRITING IMMEDIATELY. THE DESIGN ENGINEER MAY REQUIRE MODIFICATION OF THESE PLANS TO THE EXTENT NECESSARY TO ASSURE COMPLIANCE WITH THE CITY'S CONSTRUCTION SPECIFICATIONS MANUAL.
6. ALL TRAFFIC CONTROL DEVICES SHALL BE ERECTED AND MAINTAINED IN CONFORMANCE WITH THE MANUAL ON UNIFORM TRAFFIC CONTROL DEVICES, LATEST EDITION.
7. TRENCH SAFETY SYSTEMS TO MEET, AS A MINIMUM, THE REQUIREMENTS OF OSHA SAFETY AND HEALTH REGULATION PART 1926.
8. A TREE REMOVAL PERMIT MAY BE REQUIRED. THE CONTRACTOR SHALL OBTAIN SUCH PERMIT, IF REQUIRED
9. CONTRACTOR SHALL CONTACT ALABAMA ONE CALL AT 811 FOR UTILITY LOCATIONS PRIOR TO ANY SITE EXCAVATION.
10. PAVEMENT BUILD-UP RECOMMENDATIONS AND SOIL SUBGRADE REQUIREMENTS SHOWN IN THE GEOTECHNICAL ENGINEER'S REPORT SHALL TAKE PRECEDENCE OVER THESE PAVEMENT SPECIFICATIONS.
11. CONTRACTOR SHALL NOTIFY ENGINEER OF RECORD OF ANY DISCREPANCIES FOUND BETWEEN GEOTECHNICAL ENGINEER'S REPORT AND PLAN SET.
12. ALL MILLING IS 1.5" ENGINEER WILL NEED TO ASSESS THE CONDITION OF THE PAVEMENT AFTER IT IS MILLED TO DETERMINE IF FULL DEPTH REBUILD IS NEEDED FOR THOSE AREAS.
13. CONTRACTOR IS TO REPAIR ANY VALVES OR STRUCTURES THAT ARE DAMAGED OR FOUND DAMAGED DURING CONSTRUCTION. ALL VALVES AND STRUCTURES DAMAGED OR UNCOVERED WILL NEED TO BE SET TO FINISH GRADE.
14. ALL EXISTING CURB & GUTTER TO REMAIN, EXCEPT WHERE IT IS SHOWN TO REPAIR OR REPLACE.
15. ALL EXISTING STRIPPING AND MARKINGS IN ROAD WAYS OR PARKING LOTS TO BE REPLACE.

LEGEND

DETAIL #1 ON SHEET C8.1	1 C8.1
NUMBER OF PARKING SPOTS	10
STANDARD CURB & GUTTER	
SPILL CURB & GUTTER	
CONCRETE PAVEMENT	
MILL & RE-PAVE	
FULL PAVEMENT RE-BUILD	
SIGN	
BENCHMARK	

N

−15 0 15 30 60
SCALE IN FEET
1" = 30'

IF OPEN CRACKS GREATER THAN 1/8" WIDE ARE STILL PRESENT AFTER MILLING, THE CRACKS ARE TO BE CLEANED OUT TO THE EXTENT PRACTICAL AND FILLED WITH LIQUID ASPHALT

JOHNSON & ASSOCIATES
ENGINEERING SURVEYING
1218 CHURCH STREET
HUNTSVILLE, ALABAMA 35801
1-256-533-7331
FAX 1-256-533-7332

REVISIONS		
no.	date	description

STEPHEN L. WALKER
NO. 16165
PROFESSIONAL ENGINEER
ALABAMA
02/14/2022
SEAL

PHASE II - ROAD IMPROVEMENTS, PARKING LOT REPAIRS
ALABAMA A&M UNIVERSITY

Charles Williams & Associates, Inc
ARCHITECTS
3601 8TH AVE. SOUTH
BIRMINGHAM, ALABAMA 35222
PH: 205-250-0700
FAX: 205-250-0515

SHEET TITLE: LAYOUT PLAN COVINGTON DR.
PROJECT NUMBER: CWA 2019-06B JA 1791EN
DATE: 02-14-2022
DRAWN BY: ATC/RDH
CHECKED BY: SW/ATC

SHEET NUMBER
C3.4

NOTES:

1. THIS PROPERTY IS LOCATED IN SECTION 18, TOWNSHIP 3 SOUTH, RANGE 1 EAST, WITHIN THE CITY LIMITS OF HUNTSVILLE, MADISON COUNTY, ALABAMA.
2. THE ADDRESS FOR THIS PROPERTY IS 4900 MERIDIAN STREET, HUNTSVILLE, AL 35811.
3. ALL DIMENSIONS ARE GIVEN TO THE BACK OF CURB UNLESS OTHERWISE SHOWN.
4. CONTRACTOR SHOULD VERIFY THE LOCATIONS OF ALL UNDERGROUND UTILITIES PRIOR TO CONSTRUCTION, UTILITIES SHOWN HEREON ARE APPROXIMATE AND MAY NOT REFLECT THE ACTUAL FIELD LOCATION OR THE PRESENCE OF OTHER UNDERGROUND UTILITIES.
5. IF ADVERSE CONDITIONS ON-SITE ARE UNCOVERED DURING CONSTRUCTION, THE DESIGN ENGINEER MUST BE NOTIFIED IN WRITING IMMEDIATELY. THE DESIGN ENGINEER MAY REQUIRE MODIFICATION OF THESE PLANS TO THE EXTENT NECESSARY TO ASSURE COMPLIANCE WITH THE CITY'S CONSTRUCTION SPECIFICATIONS MANUAL.
6. ALL TRAFFIC CONTROL DEVICES SHALL BE ERECTED AND MAINTAINED IN CONFORMANCE WITH THE MANUAL ON UNIFORM TRAFFIC CONTROL DEVICES, LATEST EDITION.
7. TRENCH SAFETY SYSTEMS TO MEET, AS A MINIMUM, THE REQUIREMENTS OF OSHA SAFETY AND HEALTH REGULATION PART 1926.
8. A TREE REMOVAL PERMIT MAY BE REQUIRED. THE CONTRACTOR SHALL OBTAIN SUCH PERMIT, IF REQUIRED
9. CONTRACTOR SHALL CONTACT ALABAMA ONE CALL AT 811 FOR UTILITY LOCATIONS PRIOR TO ANY SITE EXCAVATION.
10. PAVEMENT BUILD-UP RECOMMENDATIONS AND SOIL SUBGRADE REQUIREMENTS SHOWN IN THE GEOTECHNICAL ENGINEER'S REPORT SHALL TAKE PRECEDENCE OVER THESE PAVEMENT SPECIFICATIONS.
11. CONTRACTOR SHALL NOTIFY ENGINEER OF RECORD OF ANY DISCREPANCIES FOUND BETWEEN GEOTECHNICAL ENGINEER'S REPORT AND PLAN SET.
12. ALL MILLING IS 1.5" ENGINEER WILL NEED TO ASSESS THE CONDITION OF THE PAVEMENT AFTER IT IS MILLED TO DETERMINE IF FULL DEPTH REBUILD IS NEEDED FOR THOSE AREAS.
13. CONTRACTOR IS TO REPAIR ANY VALUES OR STRUCTURES THAT ARE DAMAGED OR FOUND DAMAGED DURING CONSTRUCTION. ALL VALUES AND STRUCTURES DAMAGED OR UNCOVERED WILL NEED TO BE SET TO FINISH GRADE.
14. ALL EXISTING CURB & GUTTER TO REMAIN, EXCEPT WHERE IT IS SHOWN TO REPAIR OR REPLACE.
15. ALL EXISTING STRIPPING AND MARKINGS IN ROAD WAYS OR PARKING LOTS TO BE REPLACE.

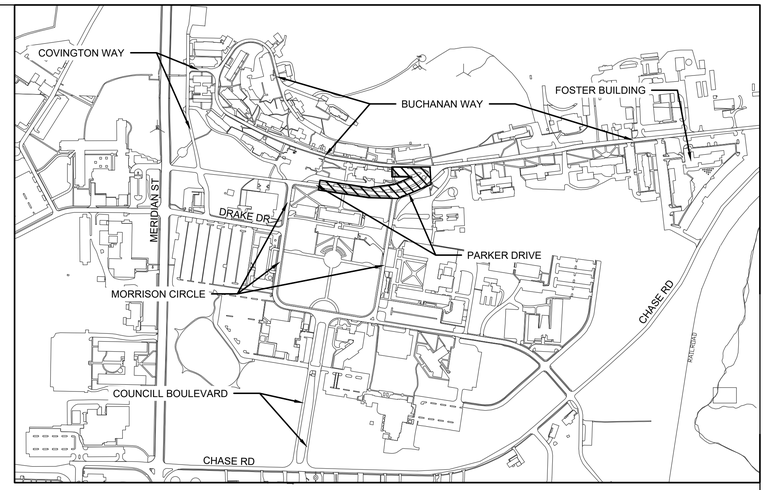

KEY MAP
NOT TO SCALE

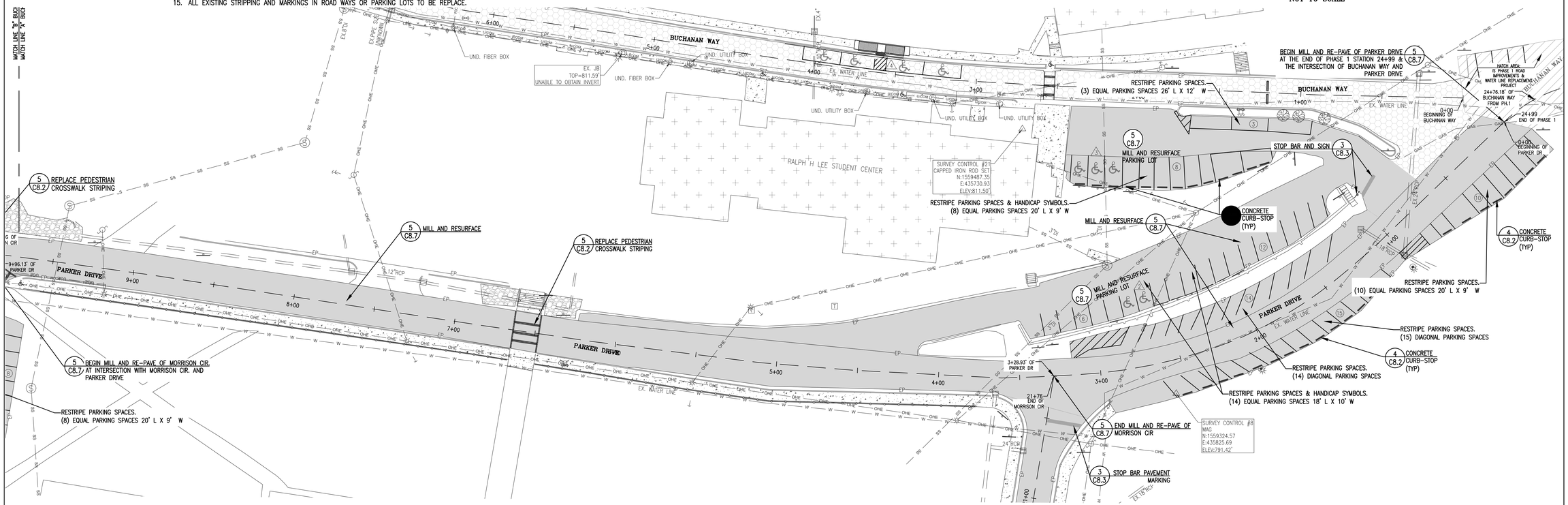

IF OPEN CRACKS GREATER THAN 1/8" WIDE ARE STILL PRESENT AFTER MILLING, THE CRACKS ARE TO BE CLEANED OUT TO THE EXTENT PRACTICAL AND FILLED WITH LIQUID ASPHALT

LEGEND

DETAIL #1 ON SHEET C8.1	1 / C8.1
NUMBER OF PARKING SPOTS	(10)
STANDARD CURB & GUTTER	
SPILL CURB & GUTTER	
CONCRETE PAVEMENT	
MILL & RE-PAVE	
FULL PAVEMENT RE-BUILD	
SIGN	
BENCHMARK	

N

-15 0 15 30 60
SCALE IN FEET
1" = 30'

JOHNSON & ASSOCIATES
ENGINEERING SURVEYING
1218 CHURCH STREET
HUNTSVILLE, ALABAMA 35801
T-256-533-7331
FAX T-256-533-7332

REVISIONS		
no.	date	description

STEPHEN L. WALKER
ALABAMA
NO. 16165
PROFESSIONAL
ENGINEER
02/14/2022
SEAL

PHASE II - ROAD IMPROVEMENTS, PARKING LOT REPAIRS
ALABAMA A&M UNIVERSITY

Charles Williams & Associates, Inc
ARCHITECTS
cwa
3601 8TH AVE. SOUTH
BIRMINGHAM, ALABAMA 35222
PH: 205-250-0700
FAX: 205-250-0515

SHEET TITLE: LAYOUT PLAN PARKER DRIVE
PROJECT NUMBER: CWA 2019-06B JA 1791EN
DATE: 02-14-2022
DRAWN BY: ATC/RDH
CHECKED BY: SW/ATC

SHEET NUMBER
C3.5

IF OPEN CRACKS GREATER THAN 1/8" WIDE ARE STILL PRESENT AFTER MILLING, THE CRACKS ARE TO BE CLEANED OUT TO THE EXTENT PRACTICAL AND FILLED WITH LIQUID ASPHALT

LEGEND

- DETAIL #1 ON SHEET C8.1 — 1 / C8.1
- NUMBER OF PARKING SPOTS — (10)
- STANDARD CURB & GUTTER
- SPILL CURB & GUTTER
- CONCRETE PAVEMENT
- MILL & RE-PAVE
- FULL PAVEMENT RE-BUILD
- SIGN
- BENCHMARK

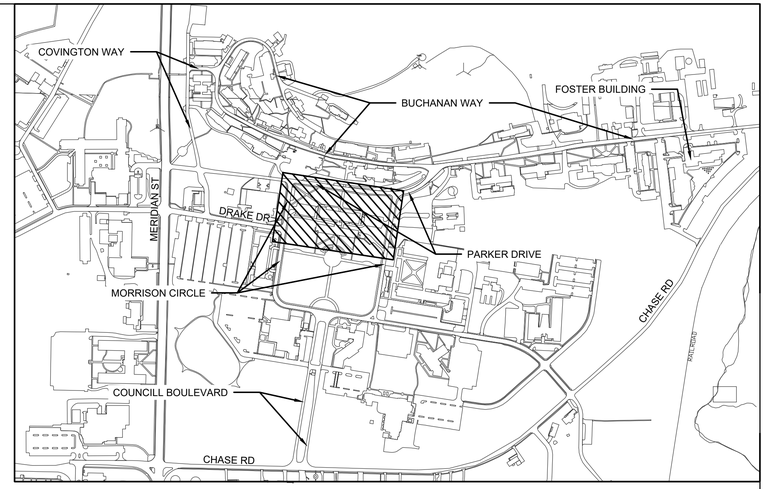

KEY MAP
NOT TO SCALE

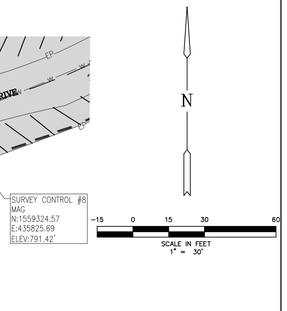

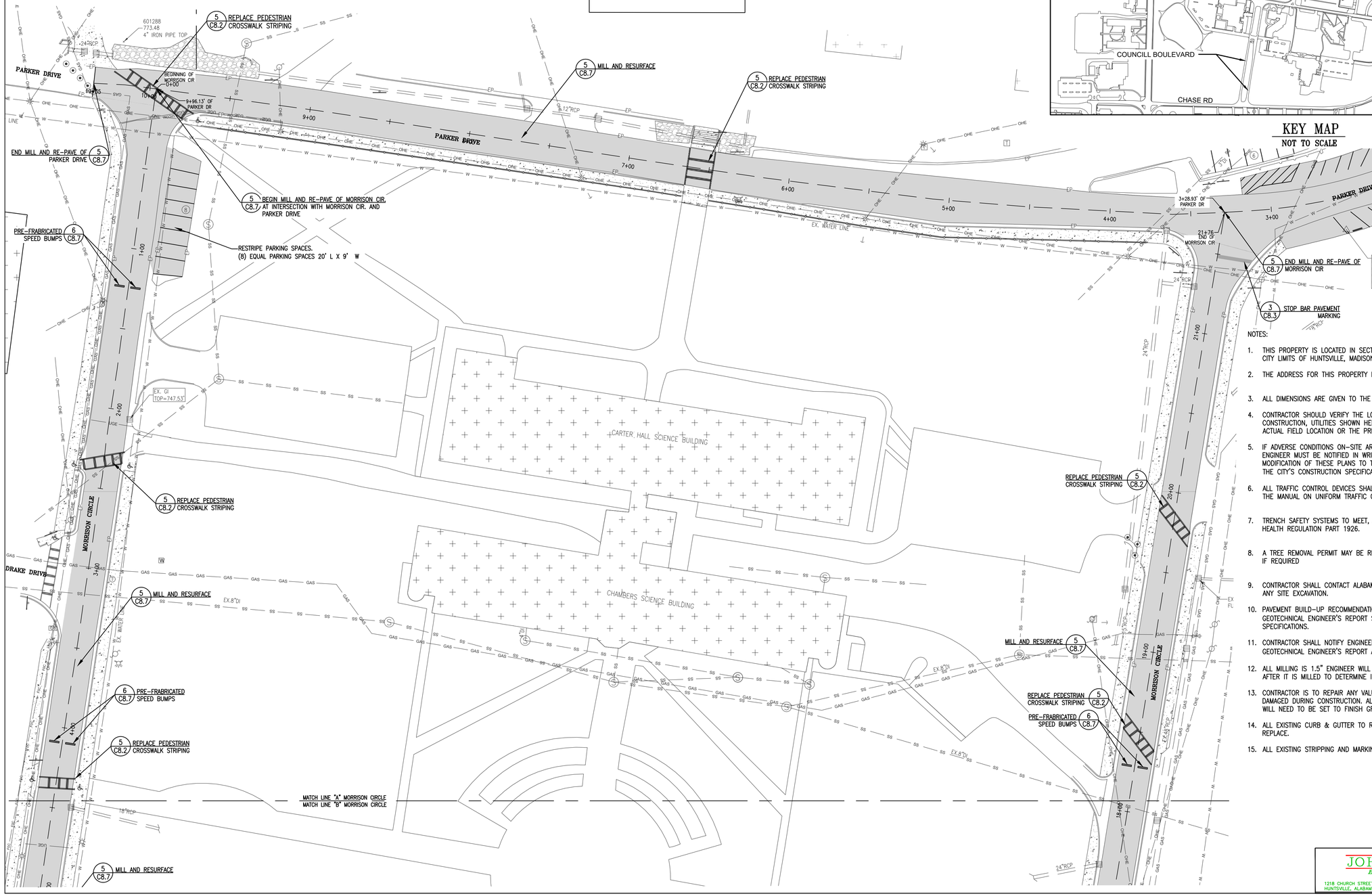

NOTES:

1. THIS PROPERTY IS LOCATED IN SECTION 18, TOWNSHIP 3 SOUTH, RANGE 1 EAST, WITHIN THE CITY LIMITS OF HUNTSVILLE, MADISON COUNTY, ALABAMA.
2. THE ADDRESS FOR THIS PROPERTY IS 4900 MERIDIAN STREET, HUNTSVILLE, AL 35811.
3. ALL DIMENSIONS ARE GIVEN TO THE BACK OF CURB UNLESS OTHERWISE SHOWN.
4. CONTRACTOR SHOULD VERIFY THE LOCATIONS OF ALL UNDERGROUND UTILITIES PRIOR TO CONSTRUCTION, UTILITIES SHOWN HEREON ARE APPROXIMATE AND MAY NOT REFLECT THE ACTUAL FIELD LOCATION OR THE PRESENCE OF OTHER UNDERGROUND UTILITIES.
5. IF ADVERSE CONDITIONS ON-SITE ARE UNCOVERED DURING CONSTRUCTION, THE DESIGN ENGINEER MUST BE NOTIFIED IN WRITING IMMEDIATELY. THE DESIGN ENGINEER MAY REQUIRE MODIFICATION OF THESE PLANS TO THE EXTENT NECESSARY TO ASSURE COMPLIANCE WITH THE CITY'S CONSTRUCTION SPECIFICATIONS MANUAL.
6. ALL TRAFFIC CONTROL DEVICES SHALL BE ERECTED AND MAINTAINED IN CONFORMANCE WITH THE MANUAL ON UNIFORM TRAFFIC CONTROL DEVICES, LATEST EDITION.
7. TRENCH SAFETY SYSTEMS TO MEET, AS A MINIMUM, THE REQUIREMENTS OF OSHA SAFETY AND HEALTH REGULATION PART 1926.
8. A TREE REMOVAL PERMIT MAY BE REQUIRED. THE CONTRACTOR SHALL OBTAIN SUCH PERMIT, IF REQUIRED
9. CONTRACTOR SHALL CONTACT ALABAMA ONE CALL AT 811 FOR UTILITY LOCATIONS PRIOR TO ANY SITE EXCAVATION.
10. PAVEMENT BUILD-UP RECOMMENDATIONS AND SOIL SUBGRADE REQUIREMENTS SHOWN IN THE GEOTECHNICAL ENGINEER'S REPORT SHALL TAKE PRECEDENCE OVER THESE PAVEMENT SPECIFICATIONS.
11. CONTRACTOR SHALL NOTIFY ENGINEER OF RECORD OF ANY DISCREPANCIES FOUND BETWEEN GEOTECHNICAL ENGINEER'S REPORT AND PLAN SET.
12. ALL MILLING IS 1.5" ENGINEER WILL NEED TO ASSESS THE CONDITION OF THE PAVEMENT AFTER IT IS MILLED TO DETERMINE IF FULL DEPTH REBUILD IS NEEDED FOR THOSE AREAS.
13. CONTRACTOR IS TO REPAIR ANY VALUES OR STRUCTURES THAT ARE DAMAGED OR FOUND DAMAGED DURING CONSTRUCTION. ALL VALUES AND STRUCTURES DAMAGED OR UNCOVERED WILL NEED TO BE SET TO FINISH GRADE.
14. ALL EXISTING CURB & GUTTER TO REMAIN, EXCEPT WHERE IT IS SHOWN TO REPAIR OR REPLACE.
15. ALL EXISTING STRIPPING AND MARKINGS IN ROAD WAYS OR PARKING LOTS TO BE REPLACE.

JOHNSON & ASSOCIATES
ENGINEERING SURVEYING
1218 CHURCH STREET
HUNTSVILLE, ALABAMA 35801
T-256-533-7331
FAX 1-256-533-7332

REVISIONS		
no	date	description

STATE OF ALABAMA — NO. 16165 PROFESSIONAL ENGINEER — STEPHEN L. WALKER
02/14/2022 SEAL

PHASE II - ROAD IMPROVEMENTS, PARKING LOT REPAIRS
ALABAMA A&M UNIVERSITY

Charles Williams & Associates, Inc
ARCHITECTS
3601 8TH AVE. SOUTH
BIRMINGHAM, ALABAMA 35222
PH: 205-250-0700
FAX: 205-250-0515

SHEET TITLE:	LAYOUT PLAN PARKER DR.-MORRISON CIR.
PROJECT NUMBER:	CWA 2019-06B JA 1791EN
DATE:	02-14-2022
DRAWN BY:	ATC/RDH
CHECKED BY:	SW/ATC

SHEET NUMBER
C3.6

IF OPEN CRACKS GREATER THAN 1/8" WIDE ARE STILL PRESENT AFTER MILLING, THE CRACKS ARE TO BE CLEANED OUT TO THE EXTENT PRACTICAL AND FILLED WITH LIQUID ASPHALT

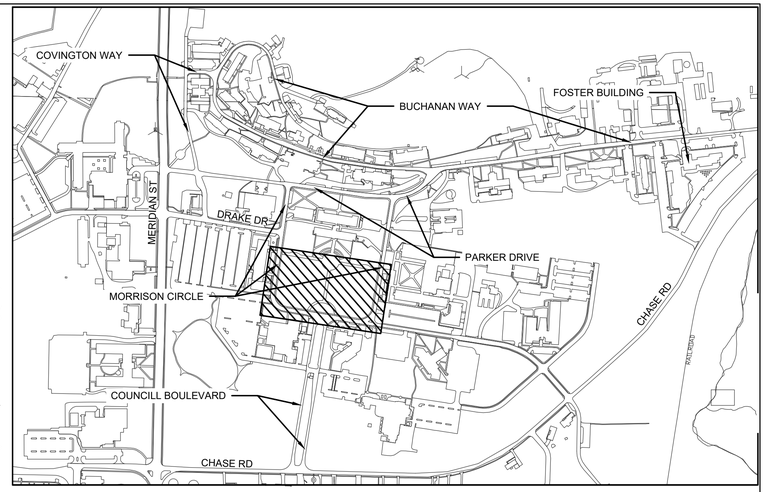

KEY MAP
NOT TO SCALE

NOTES:

1. THIS PROPERTY IS LOCATED IN SECTION 18, TOWNSHIP 3 SOUTH, RANGE 1 EAST, WITHIN THE CITY LIMITS OF HUNTSVILLE, MADISON COUNTY, ALABAMA.
2. THE ADDRESS FOR THIS PROPERTY IS 4900 MERIDIAN STREET, HUNTSVILLE, AL 35811.
3. ALL DIMENSIONS ARE GIVEN TO THE BACK OF CURB UNLESS OTHERWISE SHOWN.
4. CONTRACTOR SHOULD VERIFY THE LOCATIONS OF ALL UNDERGROUND UTILITIES PRIOR TO CONSTRUCTION, UTILITIES SHOWN HEREON ARE APPROXIMATE AND MAY NOT REFLECT THE ACTUAL FIELD LOCATION OR THE PRESENCE OF OTHER UNDERGROUND UTILITIES.
5. IF ADVERSE CONDITIONS ON-SITE ARE UNCOVERED DURING CONSTRUCTION, THE DESIGN ENGINEER MUST BE NOTIFIED IN WRITING IMMEDIATELY. THE DESIGN ENGINEER MAY REQUIRE MODIFICATION OF THESE PLANS TO THE EXTENT NECESSARY TO ASSURE COMPLIANCE WITH THE CITY'S CONSTRUCTION SPECIFICATIONS MANUAL.
6. ALL TRAFFIC CONTROL DEVICES SHALL BE ERECTED AND MAINTAINED IN CONFORMANCE WITH THE MANUAL ON UNIFORM TRAFFIC CONTROL DEVICES, LATEST EDITION.
7. TRENCH SAFETY SYSTEMS TO MEET, AS A MINIMUM, THE REQUIREMENTS OF OSHA SAFETY AND HEALTH REGULATION PART 1926.
8. A TREE REMOVAL PERMIT MAY BE REQUIRED. THE CONTRACTOR SHALL OBTAIN SUCH PERMIT, IF REQUIRED
9. CONTRACTOR SHALL CONTACT ALABAMA ONE CALL AT 811 FOR UTILITY LOCATIONS PRIOR TO ANY SITE EXCAVATION.
10. PAVEMENT BUILD-UP RECOMMENDATIONS AND SOIL SUBGRADE REQUIREMENTS SHOWN IN THE GEOTECHNICAL ENGINEER'S REPORT SHALL TAKE PRECEDENCE OVER THESE PAVEMENT SPECIFICATIONS.
11. CONTRACTOR SHALL NOTIFY ENGINEER OF RECORD OF ANY DISCREPANCIES FOUND BETWEEN GEOTECHNICAL ENGINEER'S REPORT AND PLAN SET.
12. ALL MILLING IS 1.5" ENGINEER WILL NEED TO ASSESS THE CONDITION OF THE PAVEMENT AFTER IT IS MILLED TO DETERMINE IF FULL DEPTH REBUILD IS NEEDED FOR THOSE AREAS.
13. CONTRACTOR IS TO REPAIR ANY VALUES OR STRUCTURES THAT ARE DAMAGED OR FOUND DAMAGED DURING CONSTRUCTION. ALL VALUES AND STRUCTURES DAMAGED OR UNCOVERED WILL NEED TO BE SET TO FINISH GRADE.
14. ALL EXISTING CURB & GUTTER TO REMAIN, EXCEPT WHERE IT IS SHOWN TO REPAIR OR REPLACE.
15. ALL EXISTING STRIPPING AND MARKINGS IN ROAD WAYS OR PARKING LOTS TO BE REPLACE.

LEGEND

DETAIL #1 ON SHEET C8.1	1 / C8.1
NUMBER OF PARKING SPOTS	(10)
STANDARD CURB & GUTTER	
SPILL CURB & GUTTER	
CONCRETE PAVEMENT	
MILL & RE-PAVE	
FULL PAVEMENT RE-BUILD	
SIGN	
BENCHMARK	

N

−15 0 15 30 60
SCALE IN FEET
1" = 30'

JOHNSON & ASSOCIATES
ENGINEERING SURVEYING
1218 CHURCH STREET
HUNTSVILLE, ALABAMA 35801
1-256-533-7331
FAX 1-256-533-7332

REVISIONS		
no.	date	description

STATE OF ALABAMA
NO. 16165
PROFESSIONAL ENGINEER
STEPHEN L. WALKER
02/14/2022
SEAL

PHASE II - ROAD IMPROVEMENTS, PARKING LOT REPAIRS
ALABAMA A&M UNIVERSITY

Charles Williams & Associates, Inc
ARCHITECTS
3601 8TH AVE. SOUTH
BIRMINGHAM, ALABAMA 35222
PH: 205-250-0700
FAX: 205-250-0515

SHEET TITLE:	LAYOUT PLAN MORRISON CIRCLE
PROJECT NUMBER:	CWA 2019-06B JA 1791EN
DATE:	02-14-2022
DRAWN BY:	ATC/RDH
CHECKED BY:	SW/ATC

SHEET NUMBER
C3.7

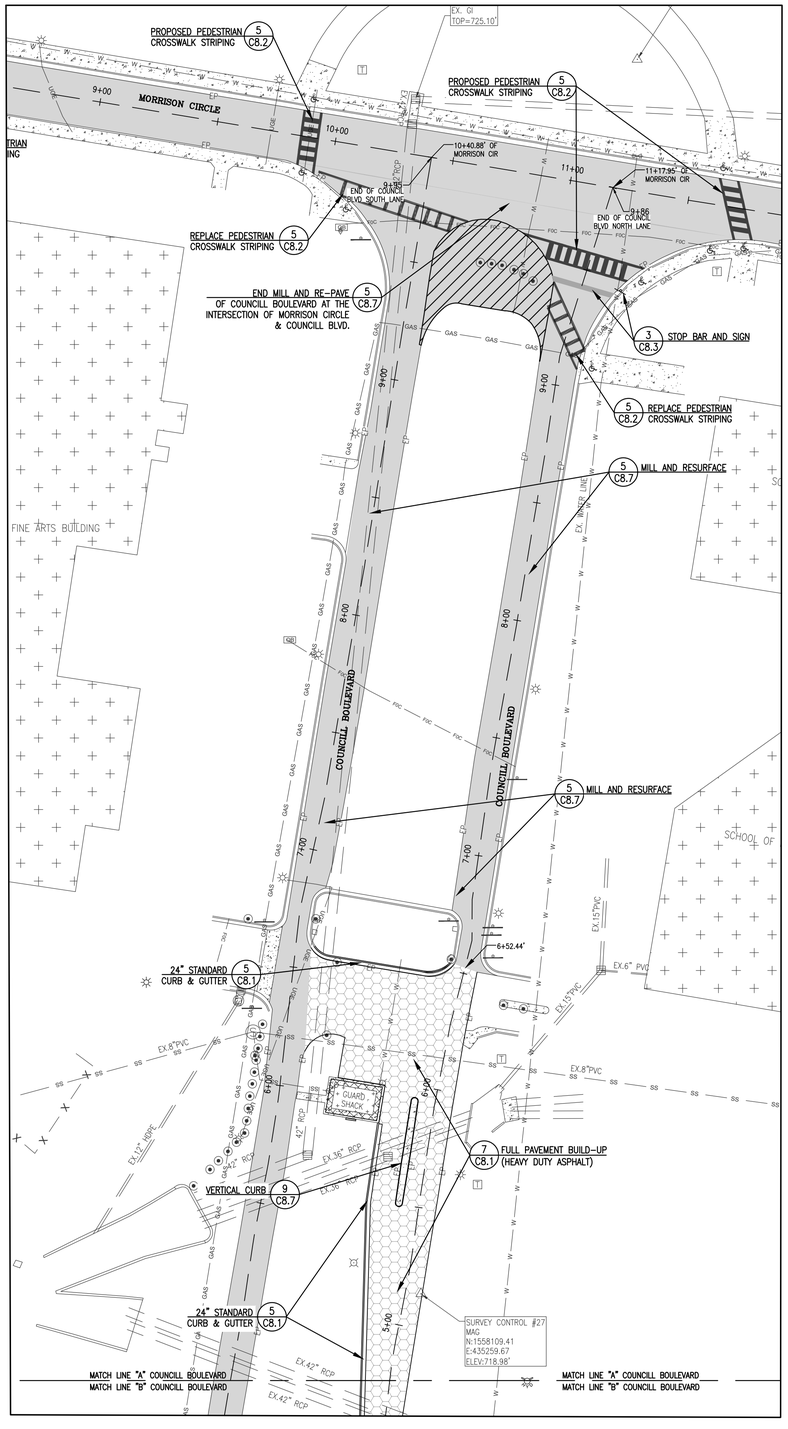

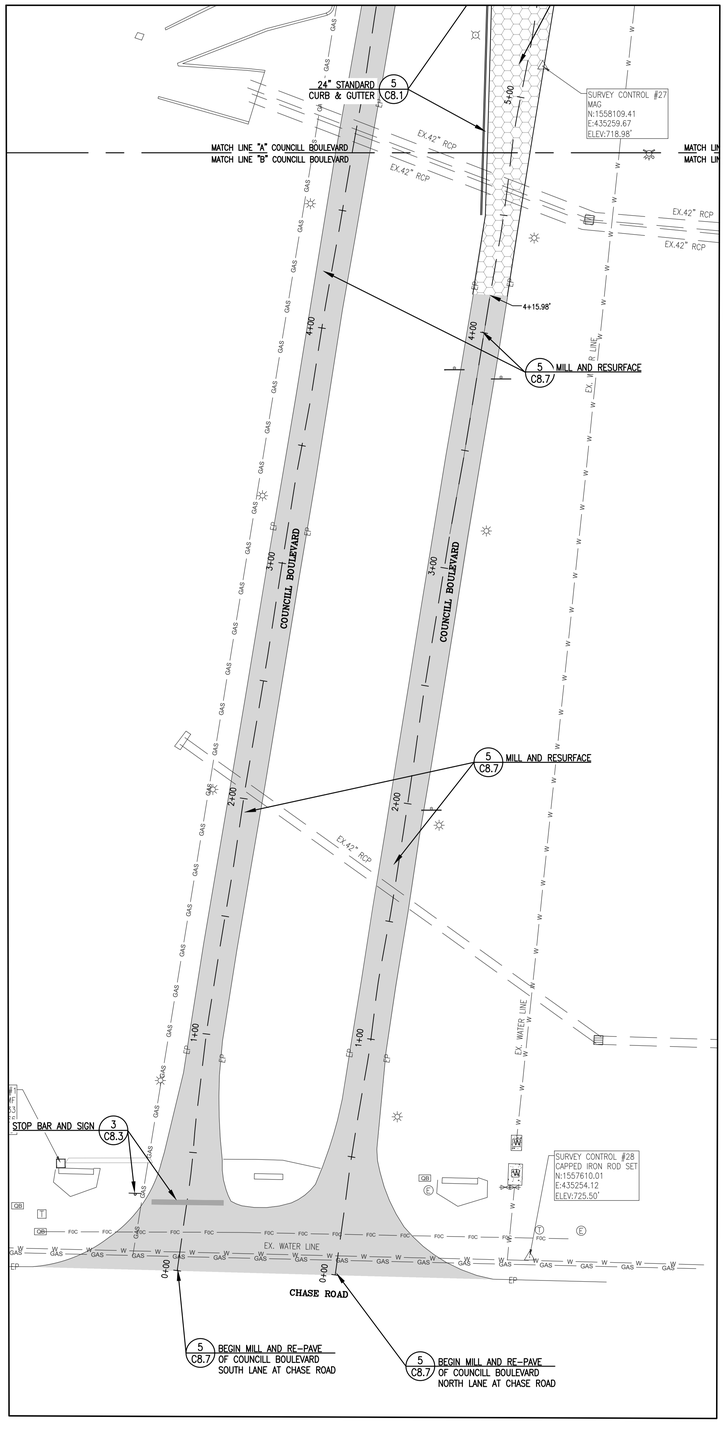

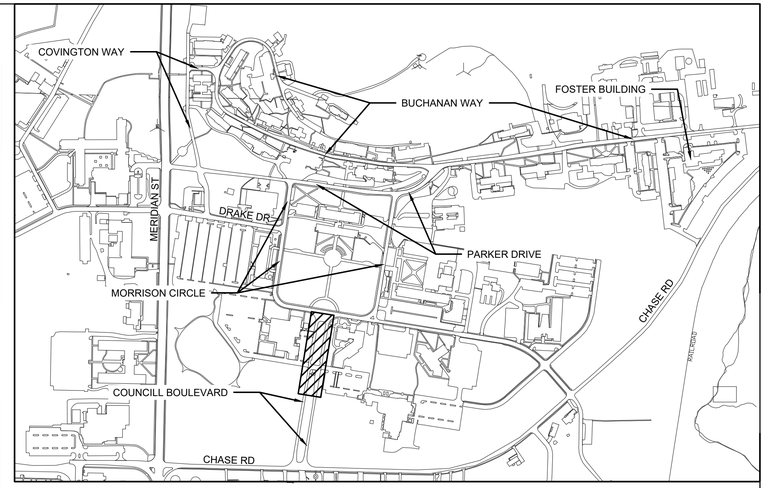

KEY MAP
NOT TO SCALE

NOTES:

1. THIS PROPERTY IS LOCATED IN SECTION 18, TOWNSHIP 3 SOUTH, RANGE 1 EAST, WITHIN THE CITY LIMITS OF HUNTSVILLE, MADISON COUNTY, ALABAMA.
2. THE ADDRESS FOR THIS PROPERTY IS 4900 MERIDIAN STREET, HUNTSVILLE, AL 35811.
3. ALL DIMENSIONS ARE GIVEN TO THE BACK OF CURB UNLESS OTHERWISE SHOWN.
4. CONTRACTOR SHOULD VERIFY THE LOCATIONS OF ALL UNDERGROUND UTILITIES PRIOR TO CONSTRUCTION, UTILITIES SHOWN HEREON ARE APPROXIMATE AND MAY NOT REFLECT THE ACTUAL FIELD LOCATION OR THE PRESENCE OF OTHER UNDERGROUND UTILITIES.
5. IF ADVERSE CONDITIONS ON-SITE ARE UNCOVERED DURING CONSTRUCTION, THE DESIGN ENGINEER MUST BE NOTIFIED IN WRITING IMMEDIATELY. THE DESIGN ENGINEER MAY REQUIRE MODIFICATION OF THESE PLANS TO THE EXTENT NECESSARY TO ASSURE COMPLIANCE WITH THE CITY'S CONSTRUCTION SPECIFICATIONS MANUAL.
6. ALL TRAFFIC CONTROL DEVICES SHALL BE ERECTED AND MAINTAINED IN CONFORMANCE WITH THE MANUAL ON UNIFORM TRAFFIC CONTROL DEVICES, LATEST EDITION.
7. TRENCH SAFETY SYSTEMS TO MEET, AS A MINIMUM, THE REQUIREMENTS OF OSHA SAFETY AND HEALTH REGULATION PART 1926.
8. A TREE REMOVAL PERMIT MAY BE REQUIRED. THE CONTRACTOR SHALL OBTAIN SUCH PERMIT, IF REQUIRED
9. CONTRACTOR SHALL CONTACT ALABAMA ONE CALL AT 811 FOR UTILITY LOCATIONS PRIOR TO ANY SITE EXCAVATION.
10. PAVEMENT BUILD-UP RECOMMENDATIONS AND SOIL SUBGRADE REQUIREMENTS SHOWN IN THE GEOTECHNICAL ENGINEER'S REPORT SHALL TAKE PRECEDENCE OVER THESE PAVEMENT SPECIFICATIONS.
11. CONTRACTOR SHALL NOTIFY ENGINEER OF RECORD OF ANY DISCREPANCIES FOUND BETWEEN GEOTECHNICAL ENGINEER'S REPORT AND PLAN SET.
12. ALL MILLING IS 1.5" ENGINEER WILL NEED TO ASSESS THE CONDITION OF THE PAVEMENT AFTER IT IS MILLED TO DETERMINE IF FULL DEPTH REBUILD IS NEEDED FOR THOSE AREAS.
13. CONTRACTOR IS TO REPAIR ANY VALUES OR STRUCTURES THAT ARE DAMAGED OR FOUND DAMAGED DURING CONSTRUCTION. ALL VALUES AND STRUCTURES DAMAGED OR UNCOVERED WILL NEED TO BE SET TO FINISH GRADE.
14. ALL EXISTING CURB & GUTTER TO REMAIN, EXCEPT WHERE IT IS SHOWN TO REPAIR OR REPLACE.
15. ALL EXISTING STRIPPING AND MARKINGS IN ROAD WAYS OR PARKING LOTS TO BE REPLACE.

IF OPEN CRACKS GREATER THAN 1/8" WIDE ARE STILL PRESENT AFTER MILLING, THE CRACKS ARE TO BE CLEANED OUT TO THE EXTENT PRACTICAL AND FILLED WITH LIQUID ASPHALT

LEGEND

- DETAIL #1 ON SHEET C8.1 — 1 / C8.1
- NUMBER OF PARKING SPOTS — 10
- STANDARD CURB & GUTTER
- SPILL CURB & GUTTER
- CONCRETE PAVEMENT
- MILL & RE-PAVE
- FULL PAVEMENT RE-BUILD
- SIGN
- BENCHMARK

N

−15 0 15 30 60
SCALE IN FEET
1" = 30'

JOHNSON & ASSOCIATES
ENGINEERING SURVEYING
1218 CHURCH STREET
HUNTSVILLE, ALABAMA 35801
t-256-533-7331
FAX t-256-533-7332

REVISIONS

no.	date	description

ALABAMA
STEPHEN L. WALKER
NO. 16165
PROFESSIONAL
ENGINEER
02/14/2022
SEAL

PHASE II - ROAD IMPROVEMENTS, PARKING LOT REPAIRS
ALABAMA A&M UNIVERSITY

Charles Williams & Associates, INC
ARCHITECTS
3601 6TH AVE. SOUTH
BIRMINGHAM, ALABAMA 35222
PH: 205-250-0700
FAX: 205-250-0515

SHEET TITLE:
LAYOUT PLAN
COUNCILL BOULEVARD
PROJECT NUMBER:
CWA 2019-06B JA 1791EN
DATE:
02-14-2022
DRAWN BY:
ATC/RDH
CHECKED BY:
SW/ATC

SHEET NUMBER
C3.8

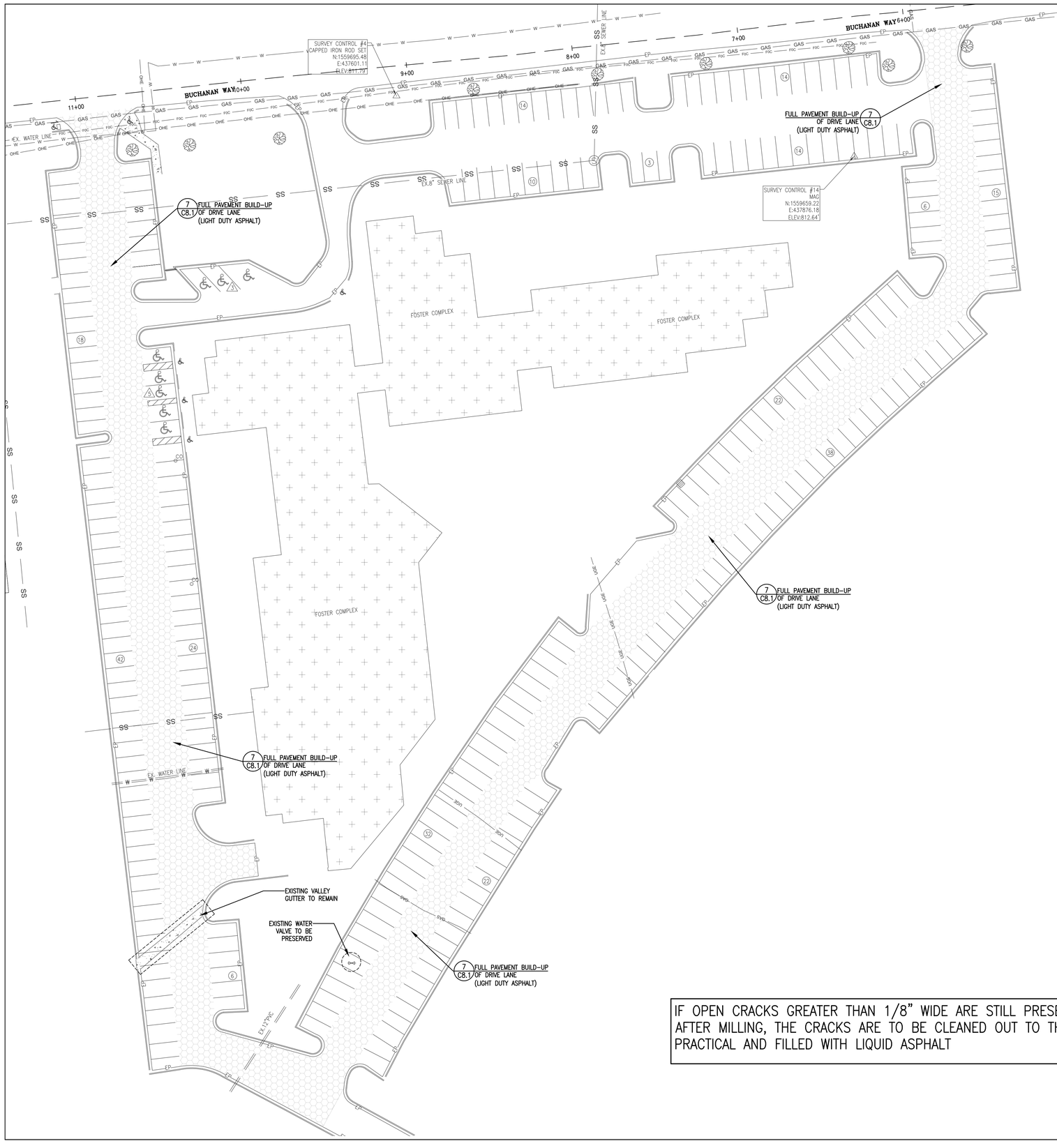

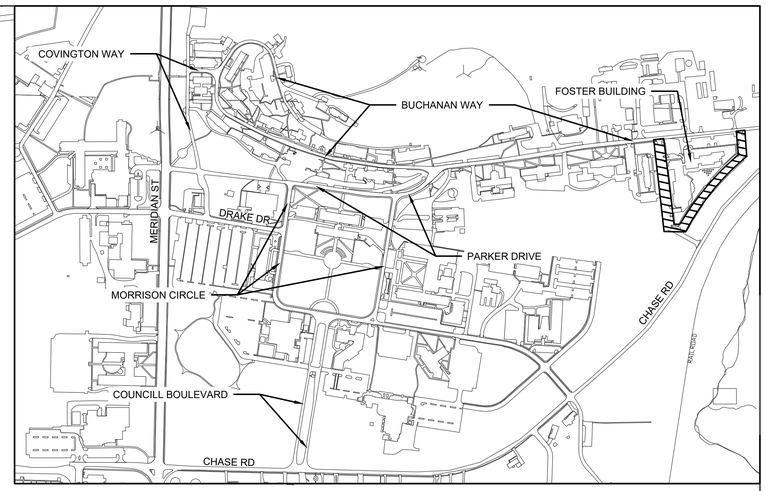

KEY MAP
NOT TO SCALE

NOTES:

1. THIS PROPERTY IS LOCATED IN SECTION 18, TOWNSHIP 3 SOUTH, RANGE 1 EAST, WITHIN THE CITY LIMITS OF HUNTSVILLE, MADISON COUNTY, ALABAMA.
2. THE ADDRESS FOR THIS PROPERTY IS 4900 MERIDIAN STREET, HUNTSVILLE, AL 35811.
3. ALL DIMENSIONS ARE GIVEN TO THE BACK OF CURB UNLESS OTHERWISE SHOWN.
4. CONTRACTOR SHOULD VERIFY THE LOCATIONS OF ALL UNDERGROUND UTILITIES PRIOR TO CONSTRUCTION, UTILITIES SHOWN HEREON ARE APPROXIMATE AND MAY NOT REFLECT THE ACTUAL FIELD LOCATION OR THE PRESENCE OF OTHER UNDERGROUND UTILITIES.
5. IF ADVERSE CONDITIONS ON-SITE ARE UNCOVERED DURING CONSTRUCTION, THE DESIGN ENGINEER MUST BE NOTIFIED IN WRITING IMMEDIATELY. THE DESIGN ENGINEER MAY REQUIRE MODIFICATION OF THESE PLANS TO THE EXTENT NECESSARY TO ASSURE COMPLIANCE WITH THE CITY'S CONSTRUCTION SPECIFICATIONS MANUAL.
6. ALL TRAFFIC CONTROL DEVICES SHALL BE ERECTED AND MAINTAINED IN CONFORMANCE WITH THE MANUAL ON UNIFORM TRAFFIC CONTROL DEVICES, LATEST EDITION.
7. TRENCH SAFETY SYSTEMS TO MEET, AS A MINIMUM, THE REQUIREMENTS OF OSHA SAFETY AND HEALTH REGULATION PART 1926.
8. A TREE REMOVAL PERMIT MAY BE REQUIRED. THE CONTRACTOR SHALL OBTAIN SUCH PERMIT, IF REQUIRED
9. CONTRACTOR SHALL CONTACT ALABAMA ONE CALL AT 811 FOR UTILITY LOCATIONS PRIOR TO ANY SITE EXCAVATION.
10. PAVEMENT BUILD-UP RECOMMENDATIONS AND SOIL SUBGRADE REQUIREMENTS SHOWN IN THE GEOTECHNICAL ENGINEER'S REPORT SHALL TAKE PRECEDENCE OVER THESE PAVEMENT SPECIFICATIONS.
11. CONTRACTOR SHALL NOTIFY ENGINEER OF RECORD OF ANY DISCREPANCIES FOUND BETWEEN GEOTECHNICAL ENGINEER'S REPORT AND PLAN SET.
12. ALL MILLING IS 1.5" ENGINEER WILL NEED TO ASSESS THE CONDITION OF THE PAVEMENT AFTER IT IS MILLED TO DETERMINE IF FULL DEPTH REBUILD IS NEEDED FOR THOSE AREAS.
13. CONTRACTOR IS TO REPAIR ANY VALUES OR STRUCTURES THAT ARE DAMAGED OR FOUND DAMAGED DURING CONSTRUCTION. ALL VALUES AND STRUCTURES DAMAGED OR UNCOVERED WILL NEED TO BE SET TO FINISH GRADE.
14. ALL EXISTING CURB & GUTTER TO REMAIN, EXCEPT WHERE IT IS SHOWN TO REPAIR OR REPLACE.
15. ALL EXISTING STRIPPING AND MARKINGS IN ROAD WAYS OR PARKING LOTS TO BE REPLACE.

IF OPEN CRACKS GREATER THAN 1/8" WIDE ARE STILL PRESENT AFTER MILLING, THE CRACKS ARE TO BE CLEANED OUT TO THE EXTENT PRACTICAL AND FILLED WITH LIQUID ASPHALT

LEGEND

- DETAIL #1 ON SHEET C8.1 — 1 / C8.1
- NUMBER OF PARKING SPOTS — (10)
- STANDARD CURB & GUTTER
- SPILL CURB & GUTTER
- CONCRETE PAVEMENT
- MILL & RE-PAVE
- FULL PAVEMENT RE-BUILD
- SIGN
- BENCHMARK

N

-15 0 15 30 60
SCALE IN FEET
1" = 30'

JOHNSON & ASSOCIATES
ENGINEERING SURVEYING
1218 CHURCH STREET
HUNTSVILLE, ALABAMA 35801
1-256-533-7331
FAX 1-256-533-7332

REVISIONS		
no.	date	description

STEPHEN L. WALKER
NO. 16165
PROFESSIONAL ENGINEER
ALABAMA
02/14/2022
SEAL

PHASE II - ROAD IMPROVEMENTS, PARKING LOT REPAIRS
ALABAMA A&M UNIVERSITY

Charles Williams & Associates, Inc ARCHITECTS
cwa
3601 8TH AVE. SOUTH
BIRMINGHAM, ALABAMA 35222
PH: 205-250-0700
FAX: 205-250-0515

SHEET TITLE:
LAYOUT PLAN
FOSTER CENTER DRIVE
PROJECT NUMBER:
CWA 2019-06B JA 1791EN
DATE:
02-14-2022
DRAWN BY:
ATC/RDH
CHECKED BY:
SW/ATC

SHEET NUMBER
C3.9

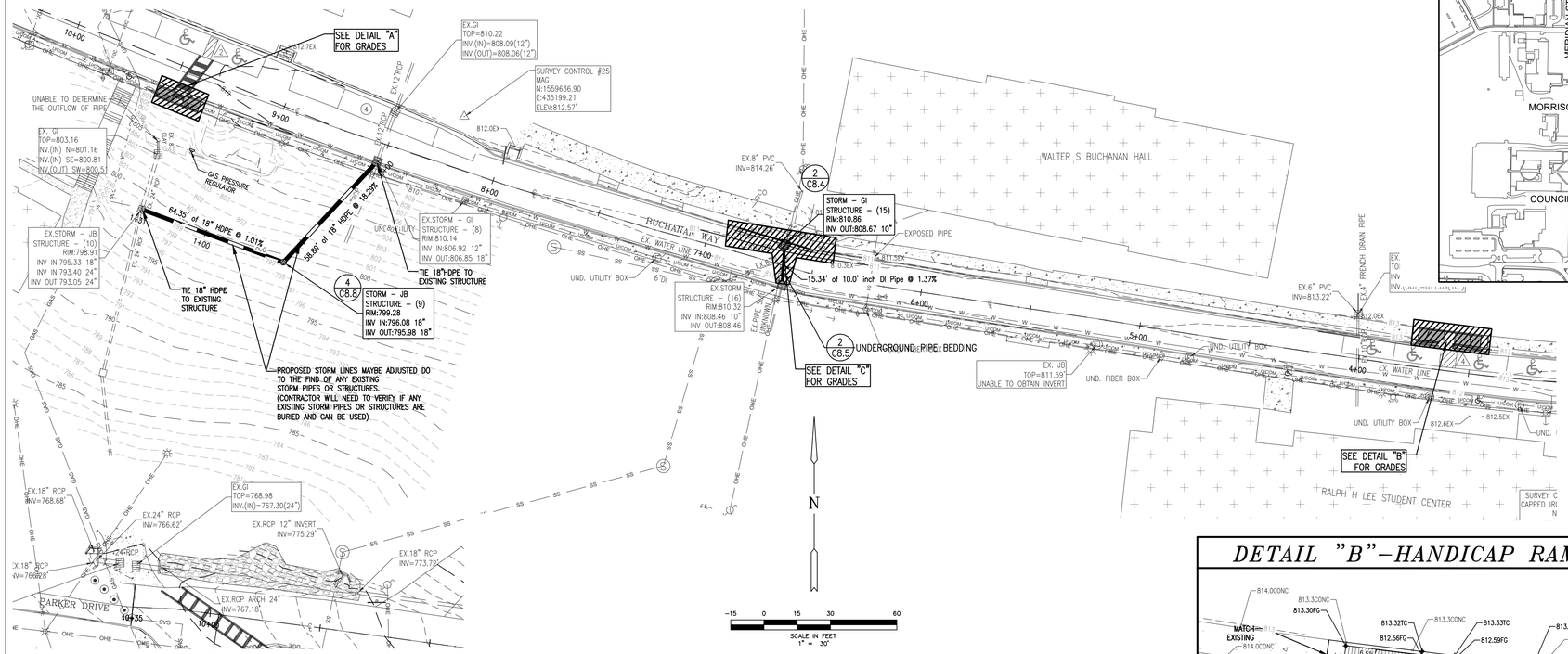

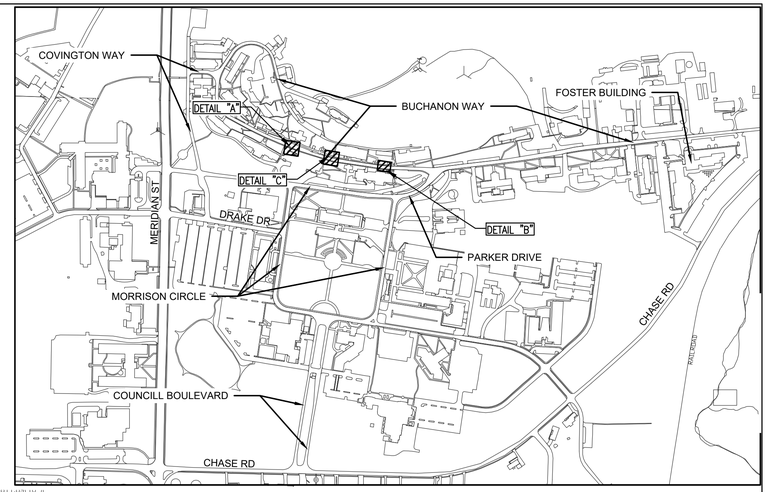

KEY MAP
NOT TO SCALE

GRADING NOTES:

1. THE DISTURBED AREA FOR THIS PROJECT IS 1.2 ACRES, THEREFORE AN ADEM/NPDES PERMIT WILL BE REQUIRED.

2. THE CONTRACTOR WILL BE RESPONSIBLE FOR CLEANING DIRT AND DEBRIS FROM THE ADJOINING STREET DURING CONSTRUCTION. ANY DAMAGE TO THE EXISTING STREET MUST BE REPAIRED BY THE CONTRACTOR DURING THIS PROJECT.

3. NO CHANGES SHALL BE MADE TO THESE APPROVED PLANS WITHOUT THE ENGINEER OF RECORD BEING NOTIFIED BEFORE CHANGES ARE MADE.

4. ALL SUBGRADES SHALL BE COMPACTED IN ACCORDANCE WITH THE DETAILS AND SPECIFICATIONS NOTED ON SHEET C8.1. CONTACT THE PROJECT GEOTECHNICAL ENGINEER AND/OR THE PROJECT CIVIL SITE ENGINEER WHEN ANY POOR SOILS ARE ENCOUNTERED TO DETERMINE WHAT OPTIONS MAY BE NEEDED TO REMEDIATE, AND TO DETERMINE ANY AMOUNTS OWED AS A CHANGED FIELD CONDITION.

5. ONCE ALL SUBGRADE ELEVATIONS OUTSIDE OF THE BUILDING FOOTPRINT HAVE BEEN COMPLETED, THEN THE SITE CONTRACTOR SHALL CONTACT THE PROJECT CIVIL SITE ENGINEER TO SCHEDULE A "PROOF-ROLL" INSPECTION IN ACCORDANCE WITH CITY OF HUNTSVILLE GUIDELINES FOR SUBDIVISION ROADWAYS. NO PAVEMENT CAN BE LAID UNTIL THE SUBGRADE AND D.G.A. BASE HAS BEEN APPROVED BY THE CIVIL SITE ENGINEER AND UPON THE SITE "PASSING" PROPER COMPACTION REQUIREMENTS AS PER CITY OF HUNTSVILLE STANDARDS.

6. MODULAR RETAINING WALLS SHALL MEET MANUFACTURER'S SPECIFICATIONS FOR GEOGRID FABRIC AND FRENCH DRAINS. BACKFILL IMMEDIATELY BEHIND THE WALLS SHALL BE GRAVEL, FOUR INCHES(4") PERFORATED PIPE(S), UNLESS OTHERWISE NOTED ON PLANS, WRAPPED IN FABRIC SHALL BE PLACED BEHIND THE WALL, RUN THE FULL LENGTH OF THE WALL, AND DAYLIGHT AT THE ENDS (OR AT DRAINAGE STRUCTURES AT THE ENDS).

7. IF A DISCREPANCY ARISES BETWEEN THE DRAWINGS AND FIELD CONDITION, OR WHERE A DETAIL IS DOUBTFUL OF INTERPRETATION, OR AN UNANTICIPATED FIELD CONDITION IS ENCOUNTERED, THE ENGINEER OF RECORD SHALL BE NOTIFIED RIGHT AWAY TO DISCUSS THE ISSUE. ANY INSTRUCTIONS OR CLARIFICATIONS SHALL BE CONFIRMED IN WRITING AND DISTRIBUTED TO ALL AFFECTED PARTIES.

8. WHEREVER THERE IS A CONFLICT BETWEEN DETAILS AND SPECIFICATIONS, OR BETWEEN DETAILS, OR WHERE DOUBTFUL OF INTERPRETATIONS, THE MOST RESTRICTIVE SHALL GOVERN AS DETERMINED BY THE ENGINEER OF RECORD.

9. TRENCH SAFETY SYSTEMS TO MEET, AS MINIMUM, THE LATEST REQUIREMENTS OF OSHA SAFETY AND HEALTH, REGULATION PART 1926, SUBPART P.

10. ALL DISTURBED AREAS SHALL BE SEEDED AND HAVE HAY SPREAD OUT AS SOON AS POSSIBLE TO PREVENT EROSION.

GRADING AND PAVEMENT NOTES:

1. EARTH FILL SHALL BE PLACED IN UNIFORM LAYERS OR LIFTS NOT EXCEEDING 8" LOOSE THICKNESS, PER GEOTECHNICAL REPORT.

2. EACH LAYER SHALL BE COMPACTED TO 98% OF MAXIMUM DENSITY. 2% +/- OF THE OPTIMUM MOISTURE (ASTM-D698).

3. EACH COMPLETED LAYER OR LIFT SHALL BE TESTED. OWNER SHALL PAY FOR TESTING. CONTRACTOR SHALL COORDINATE WITH OWNER AND ENGINEER FOR SCHEDULING TESTING.

4. SIDE SLOPES TO CONFORM TO GRADING PLAN AS APPLICABLE.

5. SITE SHALL BE GRADED SO THAT RUNOFF WILL BE DIRECTED TO THE STREET OR TO DRAINAGE WAYS IN A DEDICATED EASEMENT.

6. ALL NEW PAVEMENT TO TIE FLUSH WITH ALL NEW CURB & GUTTER AND EXISTING PAVEMENT.

DETAIL "B"–HANDICAP RAMP

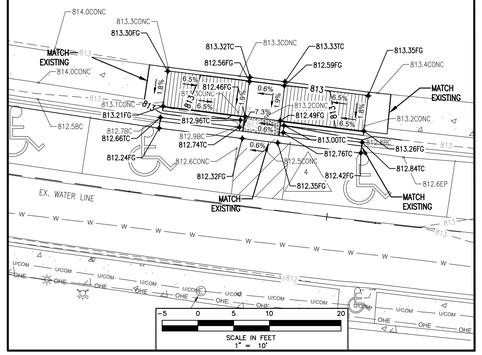

DETAIL "A"–HANDICAP RAMP

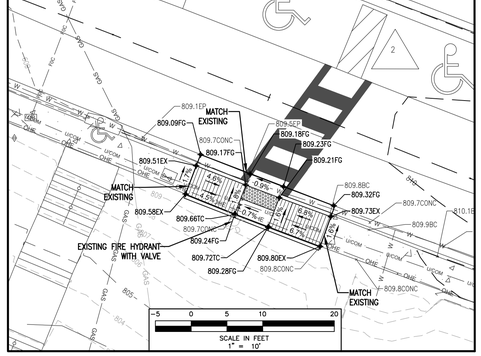

DETAIL "C"

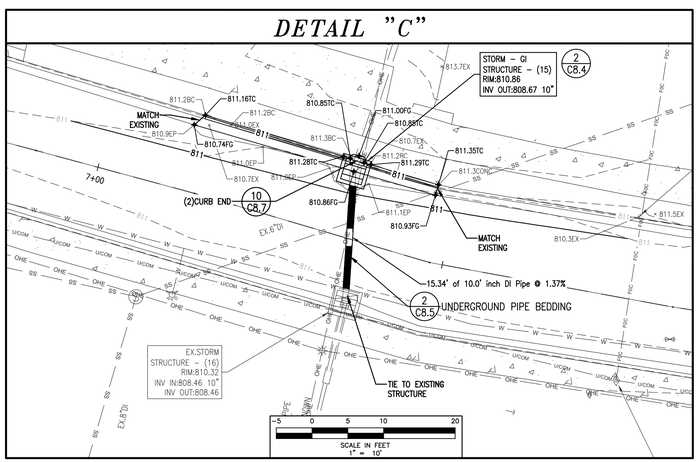

LEGEND

U & D	UTILITY & DRAINAGE ESM'T	X 728.35	SPOT ELEVATION
R.O.W.	RIGHT–OF–WAY	SWCI	SINGLE WING S–TYPE INLET
℄	CENTERLINE ROAD	DWCI	DOUBLE WING S–TYPE INLET
EP	EDGE OF PAVEMENT	FL	FLOWLINE
OHE	OVERHEAD ELEC.	JB	JUNCTION BOX
	ELECTRIC POLE	OTI	OPEN THROAT WEIR INLET
4:1	PROPOSED FINISH GRADE SLOPE	TC	TOP OF CURB
	PROPOSED GRATE INLET	FG	FINISH GRADE
RCP HDPE	REINFORCED CONC. PIPE HIGH–DENSITY POLYETHYLENE	CL	CENTERLINE
	DRAINAGE FLOW ARROW	HP	HIGH POINT
3	STORM STRUCTURE NUMBER	LP	LOW POINT
	BENCHMARK	CI	COMBINATION CURB GRATE INLET
795	PROPOSED CONTOURS		EXISTING STORM DRAIN LINE
			PROPOSED STORM DRAIN LINE
			PROPOSED CURB INLET
795	EXISTING CONTOURS		RIPRAP
TW	TOP OF WALL		PROPOSED SLOPED–PAVED
GI	GRATE INLET	1 C8.1	DETAIL CALLOUT

JOHNSON & ASSOCIATES
ENGINEERING SURVEYING
1218 CHURCH STREET
HUNTSVILLE, ALABAMA 35801
t–256–533–7331
FAX t–256–533–7332

REVISIONS		
no.	date	description

ALABAMA
JAMES T. WALKER
NO. 16165
PROFESSIONAL
ENGINEER
STEPHEN L. WALKER
02/14/2022
SEAL

PHASE II - ROAD IMPROVEMENTS, PARKING LOT REPAIRS

ALABAMA A&M UNIVERSITY

Charles Williams & Associates, INC
ARCHITECTS
3601 8TH AVE. SOUTH
BIRMINGHAM, ALABAMA 35222
PH: 205-250-0700
FAX: 205-250-0515

SHEET TITLE:
GRADING & DRAINAGE
BUCHANAN WAY
PROJECT NUMBER:
CWA 2019-06B JA 1791EN
DATE:
02-14-2022
DRAWN BY:
ATC/RDH
CHECKED BY:
SW/ATC

SHEET NUMBER
C4.1

GRADING NOTES:

1. THE DISTURBED AREA FOR THIS PROJECT IS 1.2 ACRES, THEREFORE AN ADEM/NPDES PERMIT WILL BE REQUIRED.

2. THE CONTRACTOR WILL BE RESPONSIBLE FOR CLEANING DIRT AND DEBRIS FROM THE ADJOINING STREET DURING CONSTRUCTION. ANY DAMAGE TO THE EXISTING STREET MUST BE REPAIRED BY THE CONTRACTOR DURING THIS PROJECT.

3. NO CHANGES SHALL BE MADE TO THESE APPROVED PLANS WITHOUT THE ENGINEER OF RECORD BEING NOTIFIED BEFORE CHANGES ARE MADE.

4. ALL SUBGRADES SHALL BE COMPACTED IN ACCORDANCE WITH THE DETAILS AND SPECIFICATIONS NOTED ON SHEET C8.1. CONTACT THE PROJECT GEOTECHNICAL ENGINEER AND/OR THE PROJECT CIVIL SITE ENGINEER WHEN ANY POOR SOILS ARE ENCOUNTERED TO DETERMINE WHAT OPTIONS MAY BE NEEDED TO REMEDIATE, AND TO DETERMINE ANY AMOUNTS OWED AS A CHANGED FIELD CONDITION.

5. ONCE ALL SUBGRADE ELEVATIONS OUTSIDE OF THE BUILDING FOOTPRINT HAVE BEEN COMPLETED, THEN THE SITE CONTRACTOR SHALL CONTACT THE PROJECT CIVIL SITE ENGINEER TO SCHEDULE A "PROOF-ROLL" INSPECTION IN ACCORDANCE WITH CITY OF HUNTSVILLE GUIDELINES FOR SUBDIVISION ROADWAYS. NO PAVEMENT CAN BE LAID UNTIL THE SUBGRADE AND D.G.A. BASE HAS BEEN APPROVED BY THE CIVIL SITE ENGINEER AND UPON THE SITE "PASSING" PROPER COMPACTION REQUIREMENTS AS PER CITY OF HUNTSVILLE STANDARDS.

6. MODULAR RETAINING WALLS SHALL MEET MANUFACTURER'S SPECIFICATIONS FOR GEOGRID FABRIC AND FRENCH DRAINS. BACKFILL IMMEDIATELY BEHIND THE WALLS SHALL BE GRAVEL. FOUR INCHES(4") PERFORATED PIPE(S), UNLESS OTHERWISE NOTED ON PLANS, WRAPPED IN FABRIC SHALL BE PLACED BEHIND THE WALL, RUN THE FULL LENGTH OF THE WALL, AND DAYLIGHT AT THE ENDS (OR AT DRAINAGE STRUCTURES AT THE ENDS).

7. IF A DISCREPANCY ARISES BETWEEN THE DRAWINGS AND FIELD CONDITION, OR WHERE A DETAIL IS DOUBTFUL OF INTERPRETATION, OR AN UNANTICIPATED FIELD CONDITION IS ENCOUNTERED, THE ENGINEER OF RECORD SHALL BE NOTIFIED RIGHT AWAY TO DISCUSS THE ISSUE. ANY INSTRUCTIONS OR CLARIFICATIONS SHALL BE CONFIRMED IN WRITING AND DISTRIBUTED TO ALL AFFECTED PARTIES.

8. WHEREVER THERE IS A CONFLICT BETWEEN DETAILS AND SPECIFICATIONS, OR BETWEEN DETAILS, OR WHERE DOUBTFUL OF INTERPRETATIONS, THE MOST RESTRICTIVE SHALL GOVERN AS DETERMINED BY THE ENGINEER OF RECORD.

9. TRENCH SAFETY SYSTEMS TO MEET, AS MINIMUM, THE LATEST REQUIREMENTS OF OSHA SAFETY AND HEALTH, REGULATION PART 1926, SUBPART P.

10. ALL DISTURBED AREAS SHALL BE SEEDED AND HAVE HAY SPREAD OUT AS SOON AS POSSIBLE TO PREVENT EROSION.

GRADING AND PAVEMENT NOTES:

1. EARTH FILL SHALL BE PLACED IN UNIFORM LAYERS OR LIFTS NOT EXCEEDING 8" LOOSE THICKNESS, PER GEOTECHNICAL REPORT.

2. EACH LAYER SHALL BE COMPACTED TO 98% OF MAXIMUM DENSITY. 2% +/- OF THE OPTIMUM MOISTURE (ASTM-D698).

3. EACH COMPLETED LAYER OR LIFT SHALL BE TESTED. OWNER SHALL PAY FOR TESTING. CONTRACTOR SHALL COORDINATE WITH OWNER AND ENGINEER FOR SCHEDULING TESTING.

4. SIDE SLOPES TO CONFORM TO GRADING PLAN AS APPLICABLE.

5. SITE SHALL BE GRADED SO THAT RUNOFF WILL BE DIRECTED TO THE STREET OR TO DRAINAGE WAYS IN A DEDICATED EASEMENT.

6. ALL NEW PAVEMENT TO TIE FLUSH WITH ALL NEW CURB & GUTTER AND EXISTING PAVEMENT.

LEGEND

U & D R.O.W.	UTILITY & DRAINAGE ESM'T RIGHT-OF-WAY	X 728.35	SPOT ELEVATION
—— ℄ ——	CENTERLINE ROAD	SWCI	SINGLE WING S-TYPE INLET
—— EP ——	EDGE OF PAVEMENT	DWCI	DOUBLE WING S-TYPE INLET
—— OHE ——	OVERHEAD ELEC.	FL	FLOWLINE
	ELECTRIC POLE	JB	JUNCTION BOX
4:1	PROPOSED FINISH GRADE SLOPE	OTI	OPEN THROAT WEIR INLET
	PROPOSED GRATE INLET	TC	TOP OF CURB
RCP HDPE	REINFORCED CONC. PIPE HIGH-DENSITY POLYETHYLENE	FG	FINISH GRADE
	DRAINAGE FLOW ARROW	CL	CENTERLINE
3	STORM STRUCTURE NUMBER	HP	HIGH POINT
	BENCHMARK	LP	LOW POINT
795	PROPOSED CONTOURS	CI	COMBINATION CURB GRATE INLET
795	EXISTING CONTOURS		EXISTING STORM DRAIN LINE
TW	TOP OF WALL		PROPOSED STORM DRAIN LINE
GI	GRATE INLET		PROPOSED CURB INLET
			RIPRAP
			PROPOSED SLOPED-PAVED
		1 C8.1	DETAIL CALLOUT

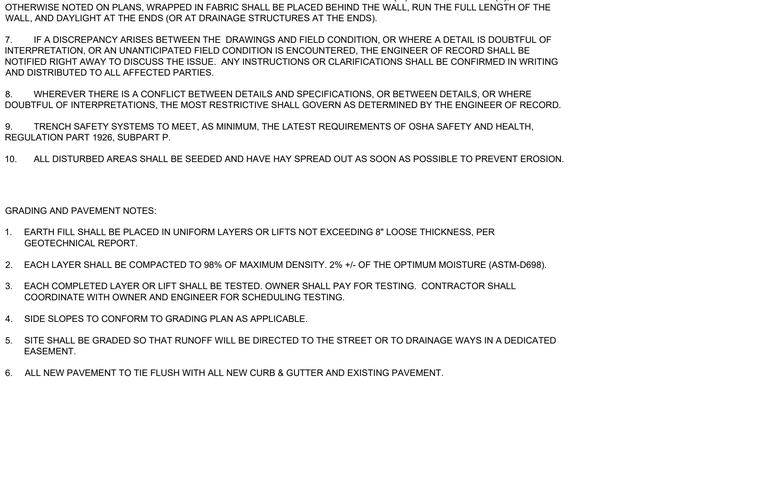

KEY MAP
NOT TO SCALE

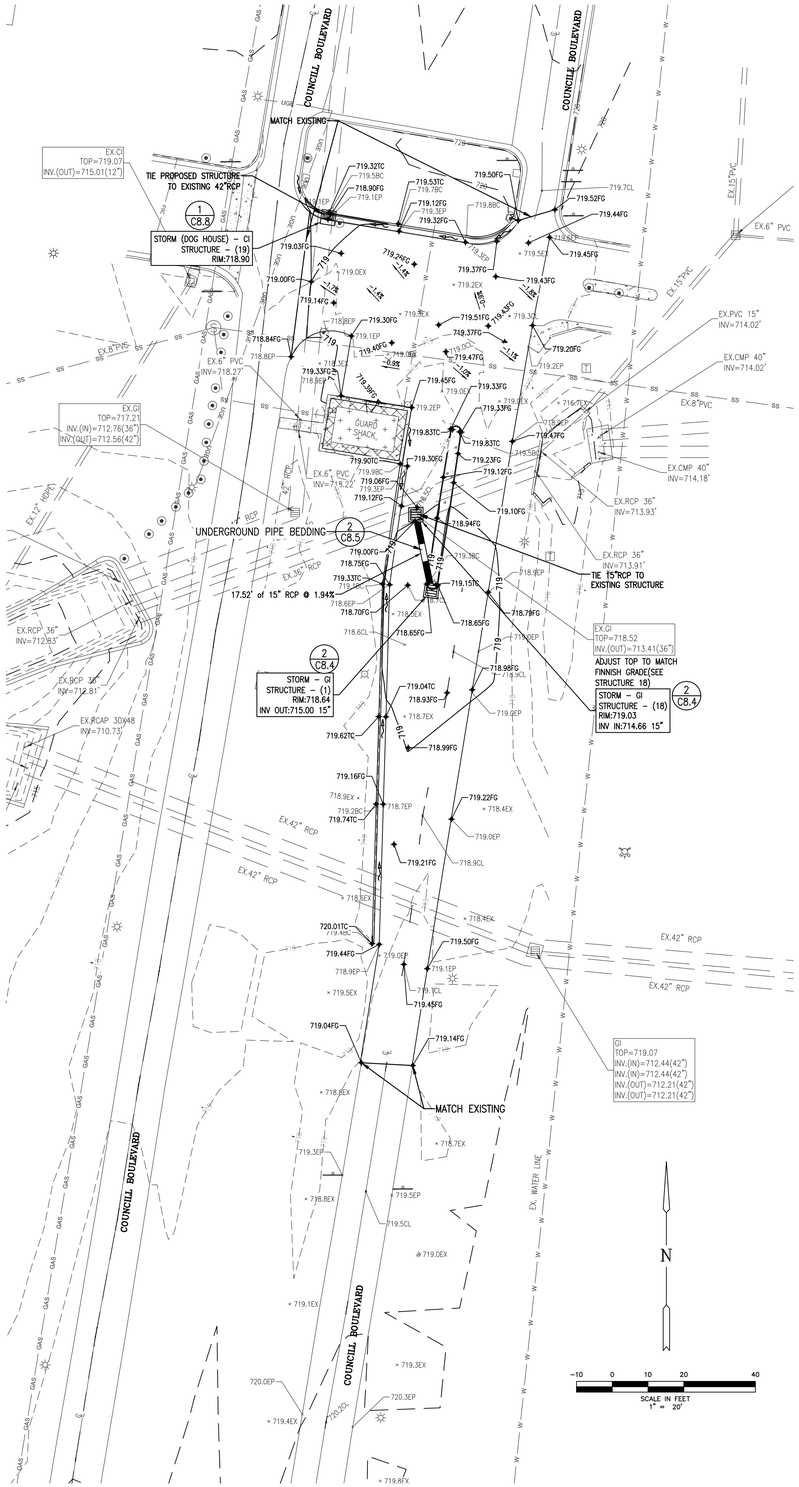

REVISIONS		
no.	date	description



PHASE II - ROAD IMPROVEMENTS, PARKING LOT REPAIRS
ALABAMA A&M UNIVERSITY

Charles Williams & Associates, Inc ARCHITECTS
cwa
3601 8TH AVE. SOUTH
BIRMINGHAM, ALABAMA 35222
PH: 205-250-0700
FAX: 205-250-0515

SHEET TITLE: GRADING & DRAINAGE COUNCILL BLVD
PROJECT NUMBER: CWA 2019-06B JA 1791EN
DATE: 02-14-2022
DRAWN BY: ATC/RDH
CHECKED BY: SW/ATC

SHEET NUMBER
C4.2

JOHNSON & ASSOCIATES
ENGINEERING SURVEYING
1218 CHURCH STREET
HUNTSVILLE, ALABAMA 35801
1-256-533-7331
FAX 1-256-533-7332

GRADING NOTES:

1. THE DISTURBED AREA FOR THIS PROJECT IS 1.2 ACRES, THEREFORE AN ADEM/NPDES PERMIT WILL BE REQUIRED.

2. THE CONTRACTOR WILL BE RESPONSIBLE FOR CLEANING DIRT AND DEBRIS FROM THE ADJOINING STREET DURING CONSTRUCTION. ANY DAMAGE TO THE EXISTING STREET MUST BE REPAIRED BY THE CONTRACTOR DURING THIS PROJECT.

3. NO CHANGES SHALL BE MADE TO THESE APPROVED PLANS WITHOUT THE ENGINEER OF RECORD BEING NOTIFIED BEFORE CHANGES ARE MADE.

4. ALL SUBGRADES SHALL BE COMPACTED IN ACCORDANCE WITH THE DETAILS AND SPECIFICATIONS NOTED ON SHEET C8.1. CONTACT THE PROJECT GEOTECHNICAL ENGINEER AND/OR THE PROJECT CIVIL SITE ENGINEER WHEN ANY POOR SOILS ARE ENCOUNTERED TO DETERMINE WHAT OPTIONS MAY BE NEEDED TO REMEDIATE, AND TO DETERMINE ANY AMOUNTS OWED AS A CHANGED FIELD CONDITION.

5. ONCE ALL SUBGRADE ELEVATIONS OUTSIDE OF THE BUILDING FOOTPRINT HAVE BEEN COMPLETED, THEN THE SITE CONTRACTOR SHALL CONTACT THE PROJECT CIVIL SITE ENGINEER TO SCHEDULE A "PROOF-ROLL" INSPECTION IN ACCORDANCE WITH CITY OF HUNTSVILLE GUIDELINES FOR SUBDIVISION ROADWAYS. NO PAVEMENT CAN BE LAID UNTIL THE SUBGRADE AND D.G.A. BASE HAS BEEN APPROVED BY THE CIVIL SITE ENGINEER AND UPON THE SITE "PASSING" PROPER COMPACTION REQUIREMENTS AS PER CITY OF HUNTSVILLE STANDARDS.

6. MODULAR RETAINING WALLS SHALL MEET MANUFACTURER'S SPECIFICATIONS FOR GEOGRID FABRIC AND FRENCH DRAINS. BACKFILL IMMEDIATELY BEHIND THE WALLS SHALL BE GRAVEL. FOUR INCHES(4") PERFORATED PIPE(S), UNLESS OTHERWISE NOTED ON PLANS, WRAPPED IN FABRIC SHALL BE PLACED BEHIND THE WALL, RUN THE FULL LENGTH OF THE WALL, AND DAYLIGHT AT THE ENDS (OR AT DRAINAGE STRUCTURES AT THE ENDS).

7. IF A DISCREPANCY ARISES BETWEEN THE DRAWINGS AND FIELD CONDITION, OR WHERE A DETAIL IS DOUBTFUL OF INTERPRETATION, OR AN UNANTICIPATED FIELD CONDITION IS ENCOUNTERED, THE ENGINEER OF RECORD SHALL BE NOTIFIED RIGHT AWAY TO DISCUSS THE ISSUE. ANY INSTRUCTIONS OR CLARIFICATIONS SHALL BE CONFIRMED IN WRITING AND DISTRIBUTED TO ALL AFFECTED PARTIES.

8. WHEREVER THERE IS A CONFLICT BETWEEN DETAILS AND SPECIFICATIONS, OR BETWEEN DETAILS, OR WHERE DOUBTFUL OF INTERPRETATIONS, THE MOST RESTRICTIVE SHALL GOVERN AS DETERMINED BY THE ENGINEER OF RECORD.

9. TRENCH SAFETY SYSTEMS TO MEET, AS MINIMUM, THE LATEST REQUIREMENTS OF OSHA SAFETY AND HEALTH, REGULATION PART 1926, SUBPART P.

10. ALL DISTURBED AREAS SHALL BE SEEDED AND HAVE HAY SPREAD OUT AS SOON AS POSSIBLE TO PREVENT EROSION.

GRADING AND PAVEMENT NOTES:

1. EARTH FILL SHALL BE PLACED IN UNIFORM LAYERS OR LIFTS NOT EXCEEDING 8" LOOSE THICKNESS, PER GEOTECHNICAL REPORT.

2. EACH LAYER SHALL BE COMPACTED TO 98% OF MAXIMUM DENSITY. 2% +/- OF THE OPTIMUM MOISTURE (ASTM-D698).

3. EACH COMPLETED LAYER OR LIFT SHALL BE TESTED. OWNER SHALL PAY FOR TESTING. CONTRACTOR SHALL COORDINATE WITH OWNER AND ENGINEER FOR SCHEDULING TESTING.

4. SIDE SLOPES TO CONFORM TO GRADING PLAN AS APPLICABLE.

5. SITE SHALL BE GRADED SO THAT RUNOFF WILL BE DIRECTED TO THE STREET OR TO DRAINAGE WAYS IN A DEDICATED EASEMENT.

6. ALL NEW PAVEMENT TO TIE FLUSH WITH ALL NEW CURB & GUTTER AND EXISTING PAVEMENT.

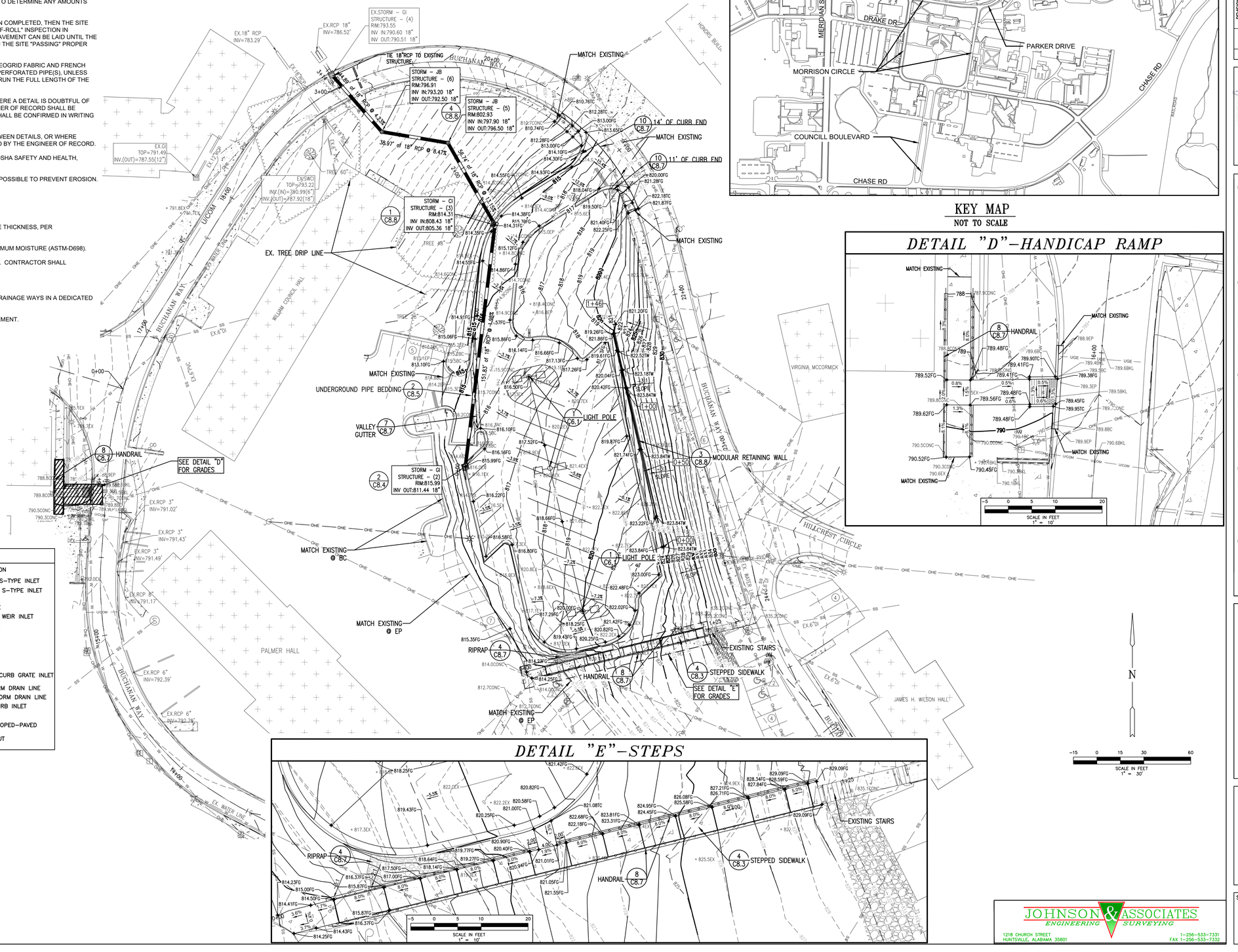

KEY MAP
NOT TO SCALE

DETAIL "D"–HANDICAP RAMP

DETAIL "E"–STEPS

LEGEND

U & D R.O.W.	UTILITY & DRAINAGE ESM'T RIGHT-OF-WAY	X 728.35	SPOT ELEVATION
℄	CENTERLINE ROAD	SWCI	SINGLE WING S-TYPE INLET
EP	EDGE OF PAVEMENT	DWCI	DOUBLE WING S-TYPE INLET
OHE	OVERHEAD ELEC.	FL	FLOWLINE
	ELECTRIC POLE	JB	JUNCTION BOX
4:1	PROPOSED FINISH GRADE SLOPE	OTI	OPEN THROAT WEIR INLET
	PROPOSED GRATE INLET	TC	TOP OF CURB
RCP HDPE	REINFORCED CONC. PIPE HIGH-DENSITY POLYETHYLENE	FG	FINISH GRADE
	DRAINAGE FLOW ARROW	CL	CENTERLINE
3	STORM STRUCTURE NUMBER	HP	HIGH POINT
	BENCHMARK	LP	LOW POINT
		CI	COMBINATION CURB GRATE INLET
795	PROPOSED CONTOURS		EXISTING STORM DRAIN LINE
			PROPOSED STORM DRAIN LINE
795	EXISTING CONTOURS		PROPOSED CURB INLET
			RIPRAP
TW	TOP OF WALL		PROPOSED SLOPED-PAVED
GI	GRATE INLET	1 C8.1	DETAIL CALLOUT

JOHNSON & ASSOCIATES
ENGINEERING SURVEYING
1218 CHURCH STREET
HUNTSVILLE, ALABAMA 35801
1-256-533-7331
FAX 1-256-533-7332

REVISIONS		
no.	date	description

STATE OF ALABAMA
STEPHEN L. WALKER
NO. 16185
PROFESSIONAL ENGINEER
02/14/2022
SEAL

PHASE II - ROAD IMPROVEMENTS, PARKING LOT REPAIRS
ALABAMA A&M UNIVERSITY

Charles Williams & Associates, Inc
ARCHITECTS
cwa
3601 8TH AVE. SOUTH
BIRMINGHAM, ALABAMA 35222
PH: 205-250-0700
FAX: 205-250-0515

SHEET TITLE:
GRADING & DRAINAGE
PARKING LOT 1
PROJECT NUMBER:
CWA 2019-06B JA 1791EN
DATE:
02-14-2022
DRAWN BY:
ATC/RDH
CHECKED BY:
SW/ATC

SHEET NUMBER
C4.3

Buchanan Parking Lot Storm Network-PROFILE

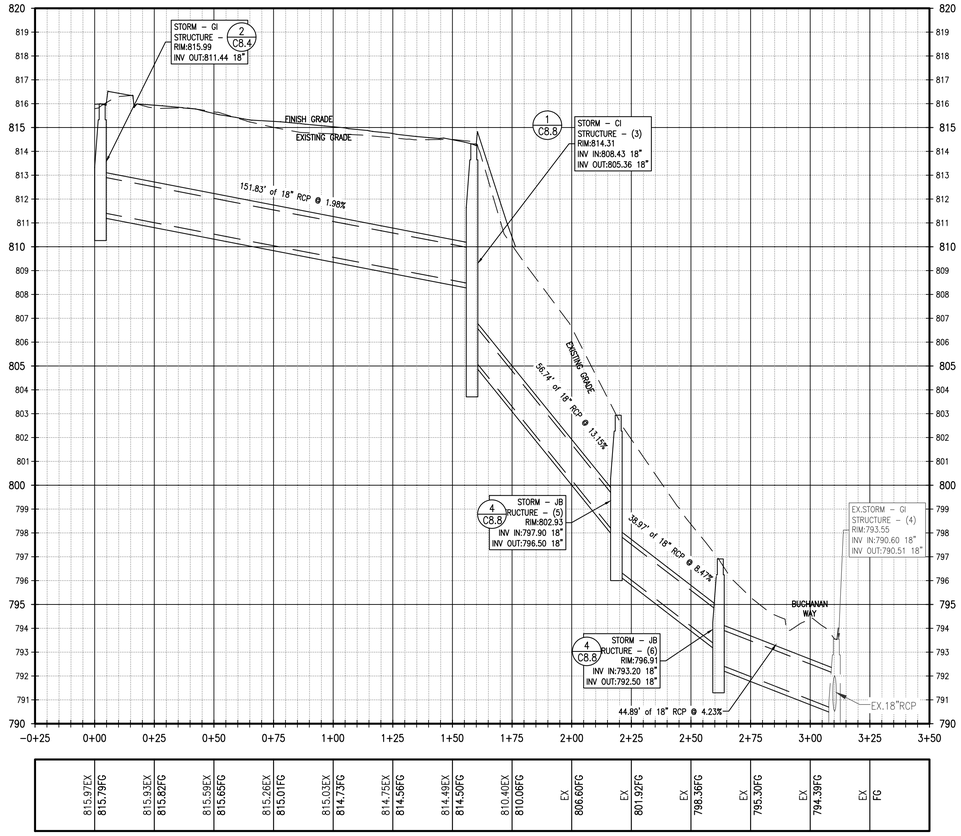

| | | |

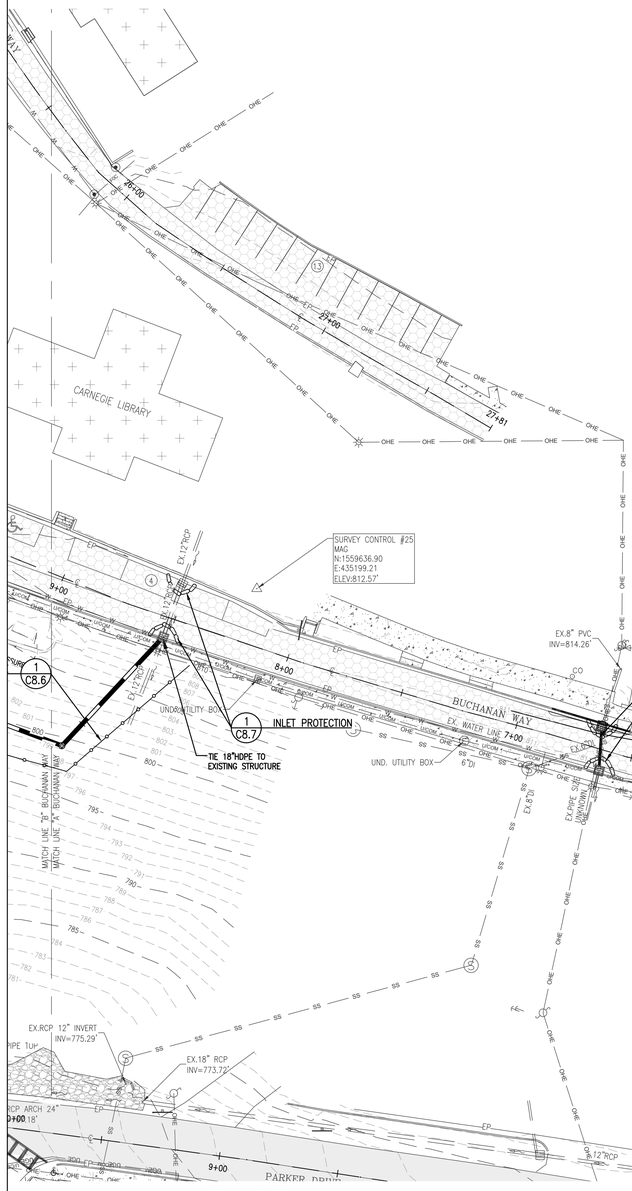

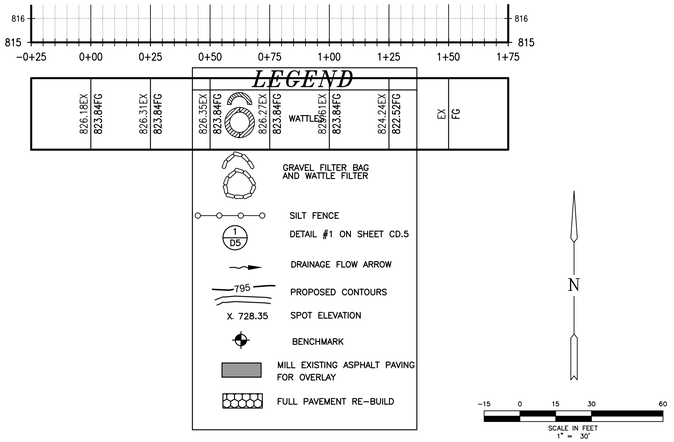

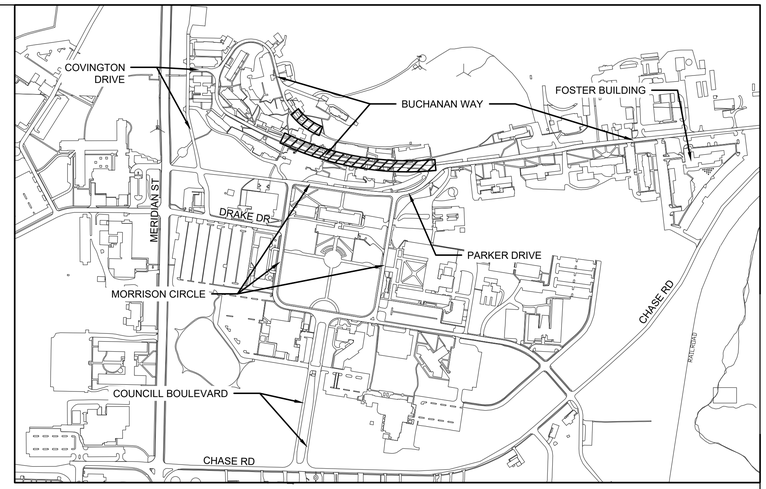

KEY MAP
NOT TO SCALE

STORM WATER MANAGEMENT

EROSION AND SEDIMENT CONTROL NOTES

GENERAL NOTES

1.) The total disturbed area required to construct the improvements shown hereon is 50,877 s.f. or 1.2 Acres (more than 1.0 acre), therefore ADEM/NPDES Permit will be required.

2.) The Site Contractor will be required to meet the following requirements during all phases of the project. Please note that all construction should be accomplished in accordance with the provisions of the National Pollutant Discharge Elimination System (NPDES) of the U. S. Environmental Protection Agency (EPA). This Erosion & Sediment Control Plan has been prepared for this project in order to show some of the Best Management Practices (BMPs) that are required to be implemented by the Site Contractor in order to comply with EPA regulations (CFR 40, Part 122) and the Alabama Department of Environmental Management (ADEM) guidelines under a NPDES General Permit. The Site Contractor is responsible for compliance with the Erosion & Sediment Control Plan (which includes the plans and details shown on this set of construction plans). It is also the Site Contractor's responsibility to prevent soil or sediment loss from the construction site. The Site Contractor shall not leave the site until all erosion control, sediment control, and storm water management practices are in place, have been inspected and found satisfactory, and all temporary practices have been properly removed.

EROSION AND SEDIMENT CONTROL

The project must be constructed according to the erosion and sediment control plans and in such a manner as to minimize adverse off-site effects of soil erosion and resulting sediment loss through the use of proper construction techniques; and by installing both temporary and permanent management practices. All soil-disturbing activities performed by the Site Contractor will be accomplished in such manner as to prevent loss of sediment from the construction site during rainfall events. To accomplish this, the project engineer recommends the specific steps noted below to be taken during construction. This list is not intended to be a comprehensive list of events and the Site Contractor should use his/her discretion to determine the best sequence of construction. All erosion and sediment control measures must be installed in a timely fashion to perform properly.

1)Immediately after mobilization but prior to initiation of any soil-disturbing activities, the Site Contractor will install all specified perimeter controls on the site. These practices have been designed to trap sediment produced during soil-disturbing activities, and to prevent off-site damage. It is recognized that some site preparation may be required to properly install these practices. In addition, the Site Contractor shall install a message board with all pertinent federal, state and local notices for workers, including OSHA guidelines, permits, etc. The Site Contractor shall install a commercial sanitation facility for the use of personnel working on the site and maintain the facility throughout the duration of construction. It is recommended that the port-a-john, the job site trailer, temporary construction worker parking, construction entrance, construction message board, concrete wash-out containment, and entrance wash-down area and containment should all be located near the construction entrance (see plan for location).

2)The recommended sequences for the installation and removal of erosion and sediment control measures is as follows: perimeter control measures (silt barriers and fencing, and construction entrance) installed at designated areas; cleaning of street(s) during construction; site grading (including temporary slope stabilization) as needed; installation of drainage system (including wattles, inlet protection, silt fences, etc.); installation of utilities; building construction; sidewalks: paving, final grading and spreading of topsoil; installation of sod or final ground cover and landscaping; removal of temporary practices and perimeter controls; and site cleanup.

3.) During all soil-disturbing activities, the Site Contractor will take appropriate steps using accepted construction methods to minimize exposure of unprotected soil and other construction materials to rainfall. Particular care must be exercised when dealing with topsoil stockpiles, fill material, or soil on slopes. The Contractor will maintain a date log of all soil disturbance activities or major grading operations, and of all management practice or control measure installations. All existing drainageways should remain until proposed storm system is functioning properly.

4.) If, during the course of construction, any area of soil (including stockpiles) remains exposed for more than thirteen calendar days or longer without suitable erosion control, then temporary stabilization measures should be installed. Suitable temporary stabilization measures are perimeter controls and ground protection measures (such as gravel bags, sand bags, seed/straw, hydroseed, mulch, erosion control blankets, wattles, silt fences, etc.) along all side-slope and down-slope borders of the disturbed area. Note that perimeter controls alone may not be successful; movement of large amounts of sediment produced by heavy rain on exposed soil could overwhelm such measures.

5.) At the Site Contractor's discretion, additional temporary erosion control practices (such as gravel bags, sand bags, seed/straw, wattles, and silt fences) may be installed along any down-slope of side-slope perimeter of a soil-disturbed area to prevent sediment movement. Anchored erosion control matting, mulches, or other acceptable methods may also be installed to stabilize any unprotected slopes during construction, and hold them to the appropriate grade. As site conditions warrant, the Site Contractor may also choose to modify the type or arrangement of specified practices to improve their effectiveness. The Site Contractor should present all proposed modifications to the erosion and sediment control plan to the Project Engineer for review and consultation.

6.) The Site Contractor or his/her qualified representative shall inspect all specified practices daily and after all rainfall events to insure that each specified practice remains intact and functioning properly. Any damage noted during such inspections shall be repaired promptly to restore the practice to original specifications. The Site Contractor will be responsible for maintenance of all erosion and sediment control practices as specified in the plans, including periodic re-grading, removal of sediment build-up, etc.

7.) Site Contractor should utilize water trucks to keep moisture content of subgrade at optimum level to improve compaction results and to reduce dust from construction traffic. When water is used for these purposes or to promote vegetation, the Site Contractor will prevent the escape of this water and any sediment it may carry from the construction site. In addition, a concrete wash area will be required with a system setup to capture all wash water and spoil/flushed concrete from delivery trucks.

8.) It is recommended that all fueling of heavy equipment be performed offsite where facilities are established to deal with emergency spill containment and emergency spill equipment and practices are in place to handle the potential hazards of equipment refueling. If the Site Contractor chooses to establish an on-site fueling area, then a fueling plan must be submitted to the project engineer outlining the emergency spill plan and spill containment measures that will be implemented by the Site Contractor to ensure that 100% of all fuel stored or brought to the site in excess of 100 gallons can be contained and that emergency clean-up measures will be stored onsite and that personnel will be trained to properly fuel the equipment and receive training for emergency spill containment and clean-up measures.

9.) Care must be exercised to prevent excessive off-site tracking of mud or sediment by construction vehicles. In addition to the specified gravel construction entrance, properly graveled transition areas should be established at all temporary site exits to assist in mud removal from departing vehicles. The Site Contractor shall be responsible for cleaning the adjacent street daily, or as directed by the city, when mud is tracked onto the street from the construction site.

10.) During the site cleanup prior to the final acceptance date, each temporary BMP will be completely removed and the area finished to the appropriate post-project condition. This involves final grading, and installation of sod or seed/straw on all bare soil areas or final ground cover as shown on the landscape plan. A minimum vegetation density of 85 percent (coverage requirement is 100%), or an equivalent sediment stabilization measure (geotextiles, jute netting, mulches, or gabions, etc.), is required until vegetation is established.

JOHNSON & ASSOCIATES
ENGINEERING SURVEYING
1218 CHURCH STREET
HUNTSVILLE, ALABAMA 35801
1-256-533-7331
FAX 1-256-533-7332

REVISIONS

no	date	description

ALABAMA
NO. 16185
PROFESSIONAL
ENGINEER
STEPHEN L. WALKER
02/14/2022
SEAL

PHASE II - ROAD IMPROVEMENTS, PARKING LOT REPAIRS

ALABAMA A&M UNIVERSITY

Charles Williams & Associates, Inc
ARCHITECTS
3601 8TH AVE. SOUTH
BIRMINGHAM, ALABAMA 35222
PH: 205-250-0700
FAX: 205-250-0515

SHEET TITLE:
EROSION & SEDIMENT CONTROL PLAN
BUCHANAN WAY

PROJECT NUMBER:
CWA 2019-068 JA 1791EN

DATE:
02-14-2022

DRAWN BY:
ATC/RDH

CHECKED BY:
SW/ATC

SHEET NUMBER
C5.1

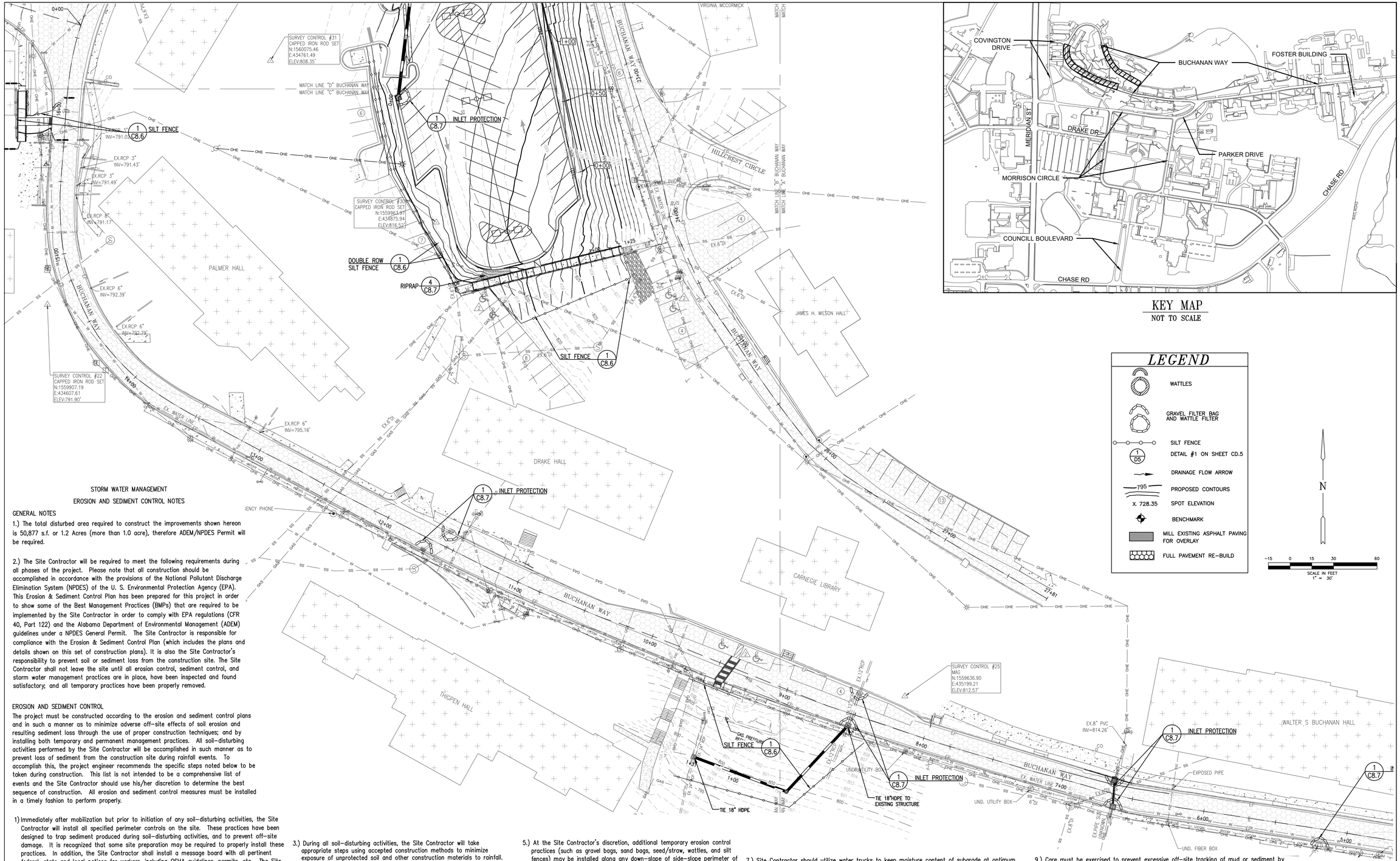

KEY MAP
NOT TO SCALE

LEGEND

- WATTLES
- GRAVEL FILTER BAG AND WATTLE FILTER
- SILT FENCE
- 1 / D5 — DETAIL #1 ON SHEET CD.5
- DRAINAGE FLOW ARROW
- 795 — PROPOSED CONTOURS
- X. 728.35 — SPOT ELEVATION
- BENCHMARK
- MILL EXISTING ASPHALT PAVING FOR OVERLAY
- FULL PAVEMENT RE-BUILD

N

-15 0 15 30 60
SCALE IN FEET
1" = 30'

PHASE II - ROAD IMPROVEMENTS, PARKING LOT REPAIRS
ALABAMA A&M UNIVERSITY

REVISIONS
no | date | description

ALABAMA
NO. 16185
PROFESSIONAL
ENGINEER
STEPHEN L. WALKER
02/14/2022
SEAL

STORM WATER MANAGEMENT

EROSION AND SEDIMENT CONTROL NOTES

GENERAL NOTES

1.) The total disturbed area required to construct the improvements shown hereon is 50,877 s.f. or 1.2 Acres (more than 1.0 acre), therefore ADEM/NPDES Permit will be required.

2.) The Site Contractor will be required to meet the following requirements during all phases of the project. Please note that all construction should be accomplished in accordance with the provisions of the National Pollutant Discharge Elimination System (NPDES) of the U. S. Environmental Protection Agency (EPA). This Erosion & Sediment Control Plan has been prepared for this project in order to show some of the Best Management Practices (BMPs) that are required to be implemented by the Site Contractor in order to comply with EPA regulations (CFR 40, Part 122) and the Alabama Department of Environmental Management (ADEM) guidelines under a NPDES General Permit. The Site Contractor is responsible for compliance with the Erosion & Sediment Control Plan (which includes the plans and details shown on this set of construction plans). It is also the Site Contractor's responsibility to prevent soil or sediment loss from the construction site. The Site Contractor shall not leave the site until all erosion control, sediment control, and storm water management practices are in place, have been inspected and found satisfactory, and all temporary practices have been properly removed.

EROSION AND SEDIMENT CONTROL

The project must be constructed according to the erosion and sediment control plans and in such a manner as to minimize adverse off-site effects of soil erosion and resulting sediment loss through the use of proper construction techniques; and by installing both temporary and permanent management practices. All soil-disturbing activities performed by the Site Contractor will be accomplished in such manner as to prevent loss of sediment from the construction site during rainfall events. To accomplish this, the project engineer recommends the specific steps noted below to be taken during construction. This list is not intended to be a comprehensive list of events and the Site Contractor should use his/her discretion to determine the best sequence of construction. All erosion and sediment control measures must be installed in a timely fashion to perform properly.

1) Immediately after mobilization but prior to initiation of any soil-disturbing activities, the Site Contractor will install all specified perimeter controls on the site. These practices have been designed to trap sediment produced during soil-disturbing activities, and to prevent off-site damage. It is recognized that some site preparation may be required to properly install these practices. In addition, the Site Contractor shall install a message board with all pertinent federal, state and local notices for workers, including OSHA guidelines, permits, etc. The Site Contractor shall install a commercial sanitation facility for the use of personnel working on the site and maintain the facility throughout the duration of construction. It is recommended that the port-a-john, the job site trailer, temporary construction worker parking, construction entrance, construction message board, concrete wash-out containment, and entrance wash-down area and containment should all be located near the construction entrance (see plan for location).

2) The recommended sequences for the installation and removal of erosion and sediment control measures is as follows: perimeter control measures (silt barriers and fencing, and construction entrance) installed at designated areas; cleaning of street(s) during construction; site grading (including temporary slope stabilization) as needed; installation of drainage system (including wattles, inlet protection, silt fences, etc.); installation of utilities; building construction; sidewalks: paving, final grading and spreading of topsoil; installation of sod or final ground cover and landscaping; removal of temporary practices and perimeter controls; and site cleanup.

3.) During all soil-disturbing activities, the Site Contractor will take appropriate steps using accepted construction methods to minimize exposure of unprotected soil and other construction materials to rainfall. Particular care must be exercised when dealing with topsoil stockpiles, fill material, or soil on slopes. The Contractor will maintain a date log of all soil disturbance activities or major grading operations, and of all management practice or control measure installations. All existing drainageways should remain until proposed storm system is functioning properly.

4.) If, during the course of construction, any area of soil (including stockpiles) remains exposed for more than thirteen calendar days or longer without suitable erosion control, then temporary stabilization measures should be installed. Suitable temporary stabilization measures are perimeter controls and ground protection measures (such as gravel bags, sand bags, seed/straw, hydroseed, mulch, erosion control blankets, wattles, silt fences, etc.) along all side-slope and down-slope borders of the disturbed area. Note that perimeter controls alone may not be successful; movement of large amounts of sediment produced by heavy rain on exposed soil could overwhelm such measures.

5.) At the Site Contractor's discretion, additional temporary erosion control practices (such as gravel bags, sand bags, seed/straw, wattles, and silt fences) may be installed along any down-slope of side-slope perimeter of a soil-disturbed area to prevent sediment movement. Anchored erosion control matting, mulches, or other acceptable methods may also be installed to stabilize any unprotected slopes during construction, and hold them to the appropriate grade. As site conditions warrant, the Site Contractor may also choose to modify the type or arrangement of specified practices to improve their effectiveness. The Site Contractor should present all proposed modifications to the erosion and sediment control plan to the Project Engineer for review and consultation.

6.) The Site Contractor or his/her qualified representative shall inspect all specified practices daily and after all rainfall events to insure that each specified practice remains intact and functioning properly. Any damage noted during such inspections shall be repaired promptly to restore the practice to original specifications. The Site Contractor will be responsible for maintenance of all erosion and sediment control practices as specified in the plans, including periodic re-grading, removal of sediment build-up, etc.

7.) Site Contractor should utilize water trucks to keep moisture content of subgrade at optimum level to improve compaction results and to reduce dust from construction traffic. When water is used for these purposes or to promote vegetation, the Site Contractor will prevent the escape of this water and any sediment it may carry from the construction site. In addition, a concrete wash area will be required with a system setup to capture all wash water and spoil/flushed concrete from delivery trucks.

8.) It is recommended that all fueling of heavy equipment be performed offsite where facilities are established to deal with emergency spill containment and emergency spill equipment and practices are in place to handle the potential hazards of equipment refueling. If the Site Contractor chooses to establish an on-site fueling area, then a fueling plan must be submitted to the project engineer outlining the emergency spill plan and spill containment measures that will be implemented by the Site Contractor to ensure that 100% of all fuel stored or brought to the site in excess of 100 gallons can be contained and that emergency clean-up measures will be stored onsite and that personnel will be trained to properly fuel the equipment and receive training for emergency spill containment and clean-up measures.

9.) Care must be exercised to prevent excessive off-site tracking of mud or sediment by construction vehicles. In addition to the specified gravel construction entrance, properly graveled transition areas should be established at all temporary site exits to assist in mud removal from departing vehicles. The Site Contractor shall be responsible for cleaning the adjacent street daily, or as directed by the city, when mud is tracked onto the street from the construction site.

10.) During the site cleanup prior to the final acceptance date, each temporary BMP will be completely removed and the area finished to the appropriate post-project condition. This involves final grading, and installation of sod or seed/straw on all bare soil areas or final ground cover as shown on the landscape plan. A minimum vegetation density of 85 percent (coverage requirement is 100%), or an equivalent sediment stabilization measure (geotextiles, jute netting, mulches, or gabions, etc.), is required until vegetation is established.

Charles Williams & Associates, INC
ARCHITECTS
3601 6TH AVE. SOUTH
BIRMINGHAM, ALABAMA 35222
PH: 205-250-0700
FAX: 205-250-0515

SHEET TITLE:
EROSION & SEDIMENT CONTROL PLAN
BUCHANAN WAY 2
PROJECT NUMBER:
CWA 2019-06B JA 1791EN
DATE:
02-14-2022
DRAWN BY:
ATC/RDH
CHECKED BY:
SW/ATC

JOHNSON & ASSOCIATES
ENGINEERING SURVEYING
1218 CHURCH STREET
HUNTSVILLE, ALABAMA 35801
1-256-533-7331
FAX 1-256-533-7332

SHEET NUMBER
C5.2

STORM WATER MANAGEMENT

EROSION AND SEDIMENT CONTROL NOTES

GENERAL NOTES

1.) The total disturbed area required to construct the improvements shown hereon is 50,877 s.f or 1.2 acres. (more than 1.0 acre), therefore ADEM/NPDES Permit will be required.

2.) The Site Contractor will be required to meet the following requirements during all phases of the project. Please note that all construction should be accomplished in accordance with the provisions of the National Pollutant Discharge Elimination System (NPDES) of the U. S. Environmental Protection Agency (EPA). This Erosion & Sediment Control Plan has been prepared for this project in order to show some of the Best Management Practices (BMPs) that are required to be implemented by the Site Contractor in order to comply with EPA regulations (CFR 40, Part 122) and the Alabama Department of Environmental Management (ADEM) guidelines under a NPDES General Permit. The Site Contractor is responsible for compliance with the Erosion & Sediment Control Plan (which includes the plans and details shown on this set of construction plans). It is also the Site Contractor's responsibility to prevent soil or sediment loss from the construction site. The Site Contractor shall not leave the site until all erosion control, sediment control, and storm water management practices are in place, have been inspected and found satisfactory; and all temporary practices have been properly removed.

EROSION AND SEDIMENT CONTROL

The project must be constructed according to the erosion and sediment control plans and in such a manner as to minimize adverse off-site effects of soil erosion and resulting sediment loss through the use of proper construction techniques; and by installing both temporary and permanent management practices. All soil-disturbing activities performed by the Site Contractor will be accomplished in such manner as to prevent loss of sediment from the construction site during rainfall events. To accomplish this, the project engineer recommends the specific steps noted below to be taken during construction. This list is not intended to be a comprehensive list of events and the Site Contractor should use his/her discretion to determine the best sequence of construction. All erosion and sediment control measures must be installed in a timely fashion to perform properly.

1) Immediately after mobilization but prior to initiation of any soil-disturbing activities, the Site Contractor will install all specified perimeter controls on the site. These practices have been designed to trap sediment produced during soil-disturbing activities, and to prevent off-site damage. It is recognized that some site preparation may be required to properly install these practices. In addition, the Site Contractor shall install a message board with all pertinent federal, state and local notices for workers, including OSHA guidelines, permits, etc. The Site Contractor shall install a commercial sanitation facility for the use of personnel working on the site and maintain the facility throughout the duration of construction. It is recommended that the port-a-john, the job site trailer, temporary construction worker parking, construction entrance, construction message board, concrete wash-out containment, and entrance wash-down area and containment should all be located near the construction entrance (see plan for location).

2) The recommended sequences for the installation and removal of erosion and sediment control measures is as follows: perimeter control measures (silt barriers and fencing, and construction entrance) installed at designated areas; cleaning of street(s) during construction; site grading (including temporary slope stabilization) as needed; installation of drainage system (including wattles, inlet protection, silt fences, etc.); installation of utilities; building construction; sidewalks: paving, final grading and spreading of topsoil; installation of sod or final ground cover and landscaping; removal of temporary practices and perimeter controls; and site cleanup.

3.) During all soil-disturbing activities, the Site Contractor will take appropriate steps using accepted construction methods to minimize exposure of unprotected soil and other construction materials to rainfall. Particular care must be exercised when dealing with topsoil stockpiles, fill material, or soil on slopes. The Contractor will maintain a date log of all soil disturbance activities or major grading operations, and of all management practice or control measure installations. All existing drainageways should remain until proposed storm system is functioning properly.

4.) If, during the course of construction, any area of soil (including stockpiles) remains exposed for more than thirteen calendar days or longer without suitable erosion control, then temporary stabilization measures should be installed. Suitable temporary stabilization measures are perimeter controls and ground protection measures (such as gravel bags, sand bags, seed/straw, hydroseed, mulch, erosion control blankets, wattles, silt fences, etc.) along all side-slope and down-slope borders of the disturbed area. Note that perimeter controls alone may not be successful; movement of large amounts of sediment produced by heavy rain on exposed soil could overwhelm such measures.

5.) At the Site Contractor's discretion, additional temporary erosion control practices (such as gravel bags, sand bags, seed/straw, wattles, and silt fences) may be installed along any down-slope of side-slope perimeter of a soil-disturbed area to prevent sediment movement. Anchored erosion control matting, mulches, or other acceptable methods may also be installed to stabilize any unprotected slopes during construction, and hold them to the appropriate grade. As site conditions warrant, the Site Contractor may also choose to modify the type or arrangement of specified practices to improve their effectiveness. The Site Contractor should present all proposed modifications to the erosion and sediment control plan to the Project Engineer for review and consultation.

6.) The Site Contractor or his/her qualified representative shall inspect all specified practices daily and after all rainfall events to insure that each specified practice remains intact and functioning properly. Any damage noted during such inspections shall be repaired promptly to restore the practice to original specifications. The Site Contractor will be responsible for maintenance of all erosion and sediment control practices as specified in the plans, including periodic re-grading, removal of sediment build-up, etc.

7.) Site Contractor should utilize water trucks to keep moisture content of subgrade at optimum level to improve compaction results and to reduce dust from construction traffic. When water is used for these purposes or to promote vegetation, the Site Contractor will prevent the escape of this water and any sediment it may carry from the construction site. In addition, a concrete wash area will be required with a system setup to capture all wash water and spoil/flushed concrete from delivery trucks.

8.) It is recommended that all fueling of heavy equipment be performed offsite where facilities are established to deal with emergency spill containment and emergency spill equipment and practices are in place to handle the potential hazards of equipment refueling. If the Site Contractor chooses to establish an on-site fueling area, then a fueling plan must be submitted to the project engineer outlining the emergency spill plan and spill containment measures that will be implemented by the Site Contractor to ensure that 100% of all fuel stored or brought to the site in excess of 100 gallons can be contained and that emergency clean-up measures will be stored onsite and that personnel will be trained to properly fuel the equipment and receive training for emergency spill containment and clean-up measures.

9.) Care must be exercised to prevent excessive off-site tracking of mud or sediment by construction vehicles. In addition to the specified gravel construction entrance, properly graveled transition areas should be established at all temporary site exits to assist in mud removal from departing vehicles. The Site Contractor shall be responsible for cleaning the adjacent street daily, or as directed by the city, when mud is tracked onto the street from the construction site.

10.) During the site cleanup prior to the final acceptance date, each temporary BMP will be completely removed and the area finished to the appropriate post-project condition. This involves final grading, and installation of sod or seed/straw on all bare soil areas or final ground cover as shown on the landscape plan. A minimum vegetation density of 85 percent (coverage requirement is 100%), or an equivalent sediment stabilization measure (geotextiles, jute netting, mulches, or gabions, etc.), is required until vegetation is established.

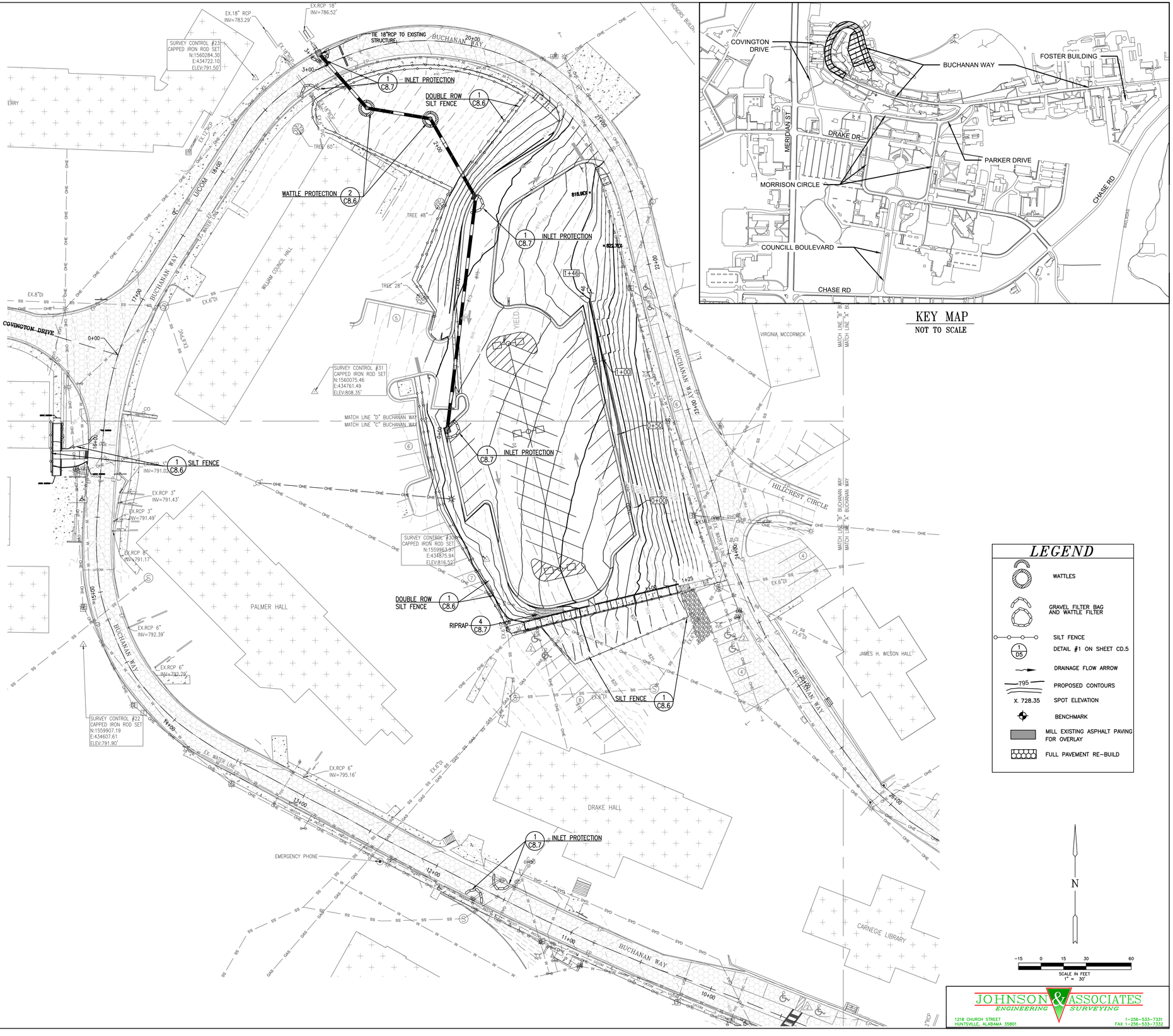

KEY MAP
NOT TO SCALE

LEGEND

- WATTLES
- GRAVEL FILTER BAG AND WATTLE FILTER
- SILT FENCE
- 1 / D5 — DETAIL #1 ON SHEET CD.5
- DRAINAGE FLOW ARROW
- 795 — PROPOSED CONTOURS
- X. 728.35 — SPOT ELEVATION
- BENCHMARK
- MILL EXISTING ASPHALT PAVING FOR OVERLAY
- FULL PAVEMENT RE-BUILD

N

SCALE IN FEET
1" = 30'
-15 0 15 30 60

JOHNSON & ASSOCIATES
ENGINEERING SURVEYING
1218 CHURCH STREET
HUNTSVILLE, ALABAMA 35801
T-256-533-7331
FAX T-256-533-7332

REVISIONS

no	date	description

ALABAMA
NO. 16185
PROFESSIONAL
ENGINEER
STEPHEN L. WALKER
02/14/2022
SEAL

PHASE II - ROAD IMPROVEMENTS, PARKING LOT REPAIRS

ALABAMA A&M UNIVERSITY

Charles Williams & Associates, INC
ARCHITECTS
3601 8TH AVE. SOUTH
BIRMINGHAM, ALABAMA 35222
PH: 205-250-0700
FAX: 205-250-0515

SHEET TITLE:
EROSION & SEDIMENT CONTROL PLAN
BUCHANAN WAY 3 & BUCHANAN PARKING LOT

PROJECT NUMBER:
CWA 2019-06B JA 1791EN

DATE:
02-14-2022

DRAWN BY:
ATC/RDH

CHECKED BY:
SWIATC

SHEET NUMBER
C5.3

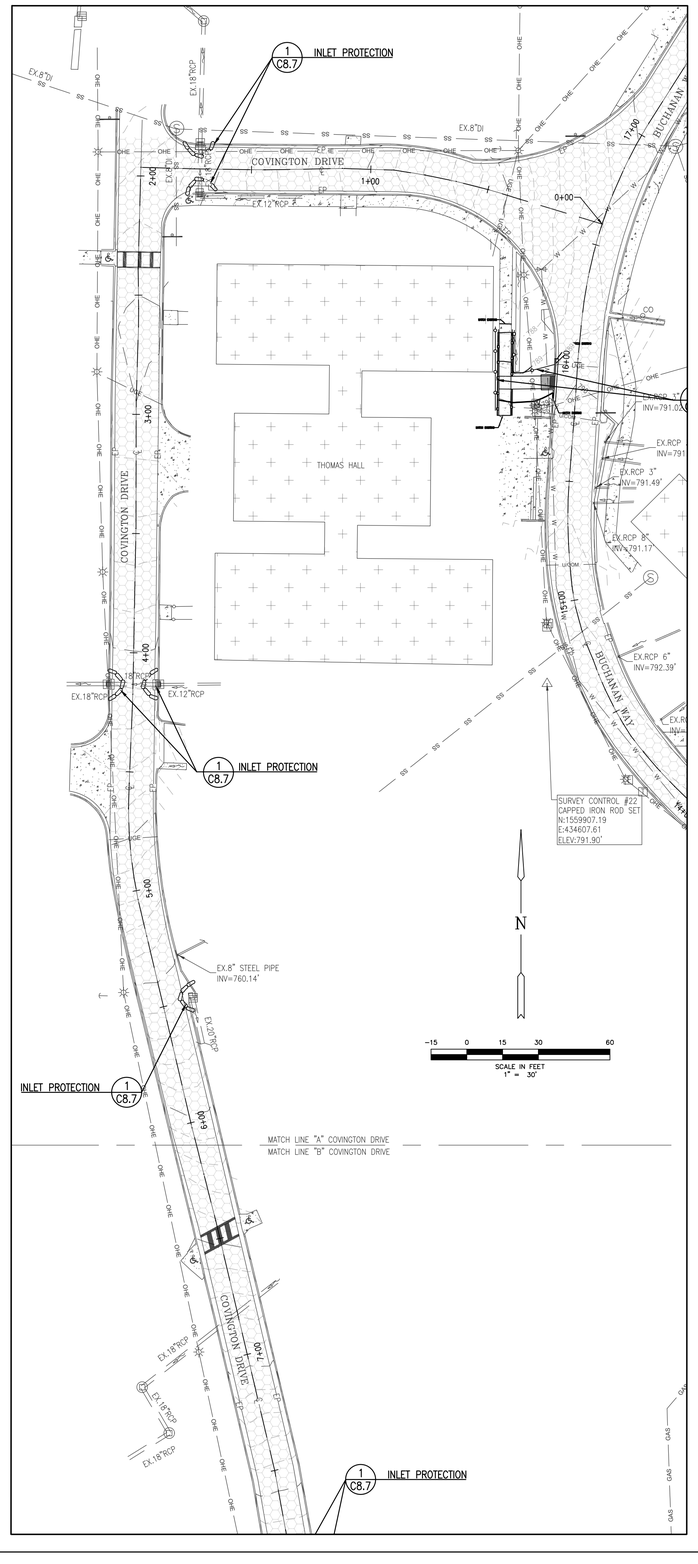

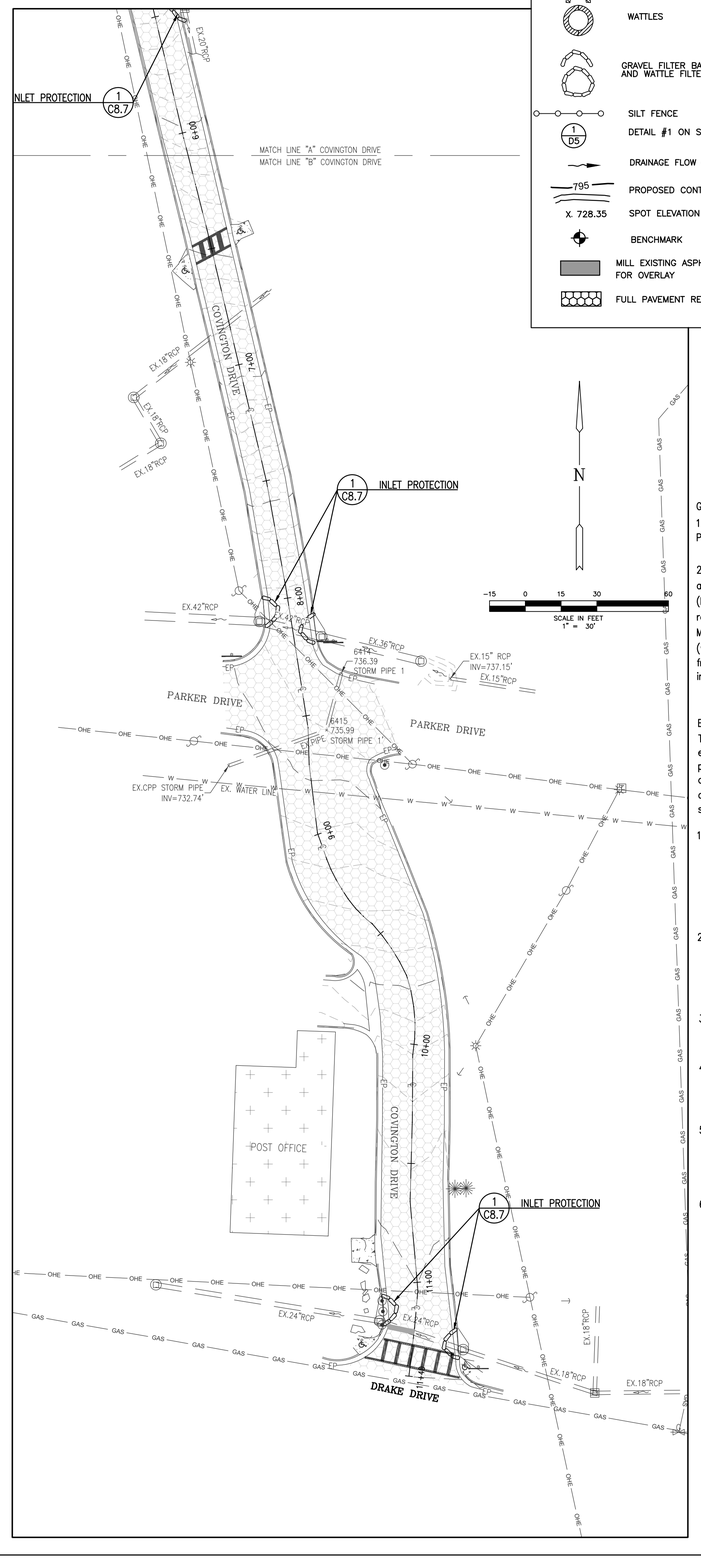

LEGEND

- WATTLES
- GRAVEL FILTER BAG AND WATTLE FILTER
- SILT FENCE
- DETAIL #1 ON SHEET CD.5 (1 / D5)
- DRAINAGE FLOW ARROW
- 795 PROPOSED CONTOURS
- X 728.35 SPOT ELEVATION
- BENCHMARK
- MILL EXISTING ASPHALT PAVING FOR OVERLAY
- FULL PAVEMENT RE-BUILD

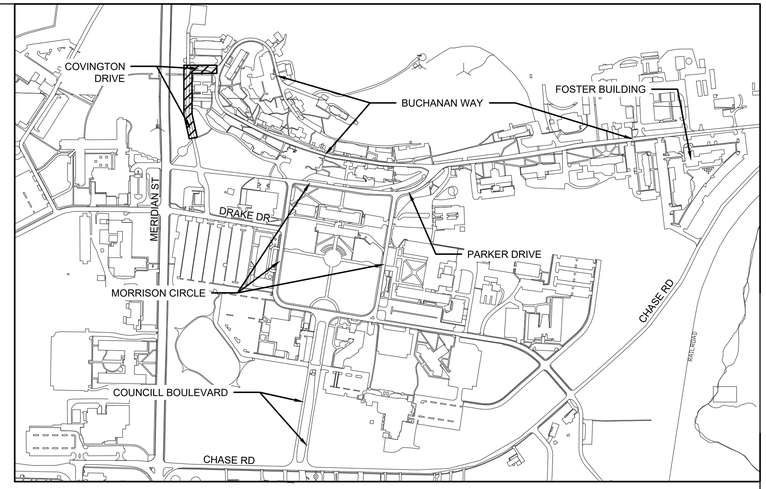

KEY MAP
NOT TO SCALE

STORM WATER MANAGEMENT

EROSION AND SEDIMENT CONTROL NOTES

GENERAL NOTES

1.) The total disturbed area required to construct the improvements shown hereon is 50,877 s.f. or 1.2 acres (more than 1.0 acre), therefore ADEM/NPDES Permit will be required.

2.) The Site Contractor will be required to meet the following requirements during all phases of the project. Please note that all construction should be accomplished in accordance with the provisions of the National Pollutant Discharge Elimination System (NPDES) of the U. S. Environmental Protection Agency (EPA). This Erosion & Sediment Control Plan has been prepared for this project in order to show some of the Best Management Practices (BMPs) that are required to be implemented by the Site Contractor in order to comply with EPA regulations (CFR 40, Part 122) and the Alabama Department of Environmental Management (ADEM) guidelines under a NPDES General Permit. The Site Contractor is responsible for compliance with the Erosion & Sediment Control Plan (which includes the plans and details shown on this set of construction plans). It is also the Site Contractor's responsibility to prevent soil or sediment loss from the construction site. The Site Contractor shall not leave the site until all erosion control, sediment control, and storm water management practices are in place, have been inspected and found satisfactory, and all temporary practices have been properly removed.

EROSION AND SEDIMENT CONTROL

The project must be constructed according to the erosion and sediment control plans and in such a manner as to minimize adverse off-site effects of soil erosion and resulting sediment loss through the use of proper construction techniques; and by installing both temporary and permanent management practices. All soil-disturbing activities performed by the Site Contractor will be accomplished in such manner as to prevent loss of sediment from the construction site during rainfall events. To accomplish this, the project engineer recommends the specific steps noted below to be taken during construction. This list is not intended to be a comprehensive list of events and the Site Contractor should use his/her discretion to determine the best sequence of construction. All erosion and sediment control measures must be installed in a timely fashion to perform properly.

1) Immediately after mobilization but prior to initiation of any soil-disturbing activities, the Site Contractor will install all specified perimeter controls on the site. These practices have been designed to trap sediment produced during soil-disturbing activities, and to prevent off-site damage. It is recognized that some site preparation may be required to properly install these practices. In addition, the Site Contractor shall install a message board with all pertinent federal, state and local notices for workers, including OSHA guidelines, permits, etc. The Site Contractor shall install a commercial sanitation facility for the use of personnel working on the site and maintain the facility throughout the duration of construction. It is recommended that the port-a-john, the job site trailer, temporary construction worker parking, construction entrance, construction message board, concrete wash-out containment, and entrance wash-down area and containment should all be located near the construction entrance (see plan for location).

2) The recommended sequences for the installation and removal of erosion and sediment control measures is as follows: perimeter control measures (silt barriers and fencing, and construction entrance) installed at designated areas; cleaning of street(s) during construction; site grading (including temporary slope stabilization) as needed; installation of drainage system (including wattles, inlet protection, silt fences, etc.); installation of utilities; building construction; sidewalks: paving, final grading and spreading of topsoil; installation of sod or final ground cover and landscaping; removal of temporary practices and perimeter controls; and site cleanup.

3.) During all soil-disturbing activities, the Site Contractor will take appropriate steps using accepted construction methods to minimize exposure of unprotected soil and other construction materials to rainfall. Particular care must be exercised when dealing with topsoil stockpiles, fill material, or soil on slopes. The Contractor will maintain a date log of all soil disturbance activities or major grading operations, and of all management practice or control measure installations. All existing drainageways should remain until proposed storm system is functioning properly.

4.) If, during the course of construction, any area of soil (including stockpiles) remains exposed for more than thirteen calendar days or longer without suitable erosion control, then temporary stabilization measures should be installed. Suitable temporary stabilization measures are perimeter controls and ground protection measures (such as gravel bags, sand bags, seed/straw, hydroseed, mulch, erosion control blankets, wattles, silt fences, etc.) along all side-slope and down-slope borders of the disturbed area. Note that perimeter controls alone may not be successful; movement of large amounts of sediment produced by heavy rain on exposed soil could overwhelm such measures.

5.) At the Site Contractor's discretion, additional temporary erosion control practices (such as gravel bags, sand bags, seed/straw, wattles, and silt fences) may be installed along any down-slope of side-slope perimeter of a soil-disturbed area to prevent sediment movement. Anchored erosion control matting, mulches, or other acceptable methods may also be installed to stabilize any unprotected slopes during construction, and hold them to the appropriate grade. As site conditions warrant, the Site Contractor may also choose to modify the type or arrangement of specified practices to improve their effectiveness. The Site Contractor should present all proposed modifications to the erosion and sediment control plan to the Project Engineer for review and consultation.

6.) The Site Contractor or his/her qualified representative shall inspect all specified practices daily and after all rainfall events to insure that each specified practice remains intact and functioning properly. Any damage noted during such inspections shall be repaired promptly to restore the practice to original specifications. The Site Contractor will be responsible for maintenance of all erosion and sediment control practices as specified in the plans, including periodic re-grading, removal of sediment build-up, etc.

7.) Site Contractor should utilize water trucks to keep moisture content of subgrade at optimum level to improve compaction results and to reduce dust from construction traffic. When water is used for these purposes or to promote vegetation, the Site Contractor will prevent the escape of this water and any sediment it may carry from the construction site. In addition, a concrete wash area will be required with a system setup to capture all wash water and spoil/flushed concrete from delivery trucks.

8.) It is recommended that all fueling of heavy equipment be performed offsite where facilities are established to deal with emergency spill containment and emergency spill equipment and practices are in place to handle the potential hazards of equipment refueling. If the Site Contractor chooses to establish an on-site fueling area, then a fueling plan must be submitted to the project engineer outlining the emergency spill plan and spill containment measures that will be implemented by the Site Contractor to ensure that 100% of all fuel stored or brought to the site in excess of 100 gallons can be contained and that emergency clean-up measures will be stored onsite and that personnel will be trained to properly fuel the equipment and receive training for emergency spill containment and clean-up measures.

9.) Care must be exercised to prevent excessive off-site tracking of mud or sediment by construction vehicles. In addition to the specified gravel construction entrance, properly graveled transition areas should be established at all temporary site exits to assist in mud removal from departing vehicles. The Site Contractor shall be responsible for cleaning the adjacent street daily, or as directed by the city, when mud is tracked onto the street from the construction site.

10.) During the site cleanup prior to the final acceptance date, each temporary BMP will be completely removed and the area finished to the appropriate post-project condition. This involves final grading, and installation of sod or seed/straw on all bare soil areas or final ground cover as shown on the landscape plan. A minimum vegetation density of 85 percent (coverage requirement is 100%), or an equivalent sediment stabilization measure (geotextiles, jute netting, mulches, or gabions, etc.), is required until vegetation is established.

REVISIONS

no	date	description

STATE OF ALABAMA — NO. 16185 PROFESSIONAL ENGINEER — STEPHEN L. WALKER — SEAL
02/14/2022

PHASE II - ROAD IMPROVEMENTS, PARKING LOT REPAIRS
ALABAMA A&M UNIVERSITY

Charles Williams & Associates, Inc ARCHITECTS
3601 8TH AVE. SOUTH
BIRMINGHAM, ALABAMA 35222
PH: 205-250-0700
FAX: 205-250-0515

SHEET TITLE:	EROSION & SEDIMENT CONTROL PLAN COVINGTON DRIVE
PROJECT NUMBER:	CWA 2019-06B JA 1791EN
DATE:	02-14-2022
DRAWN BY:	ATC/RDH
CHECKED BY:	SW/ATC

SHEET NUMBER
C5.4

JOHNSON & ASSOCIATES
ENGINEERING SURVEYING
1218 CHURCH STREET
HUNTSVILLE, ALABAMA 35801
1-256-533-7331
FAX 1-256-533-7332

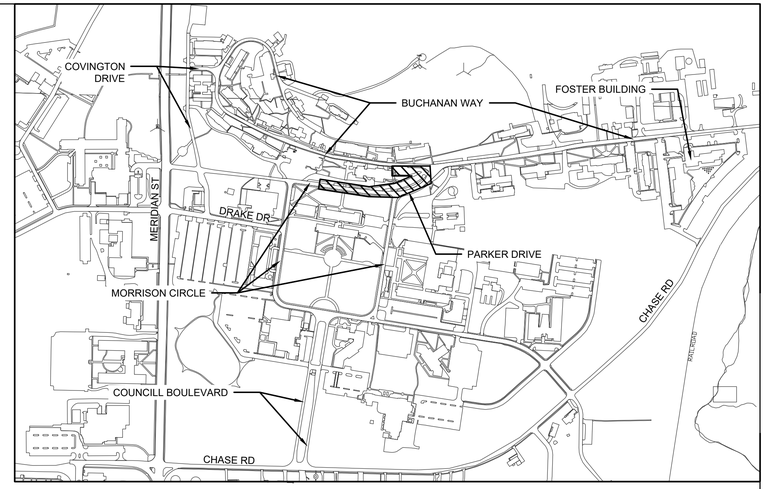

KEY MAP
NOT TO SCALE

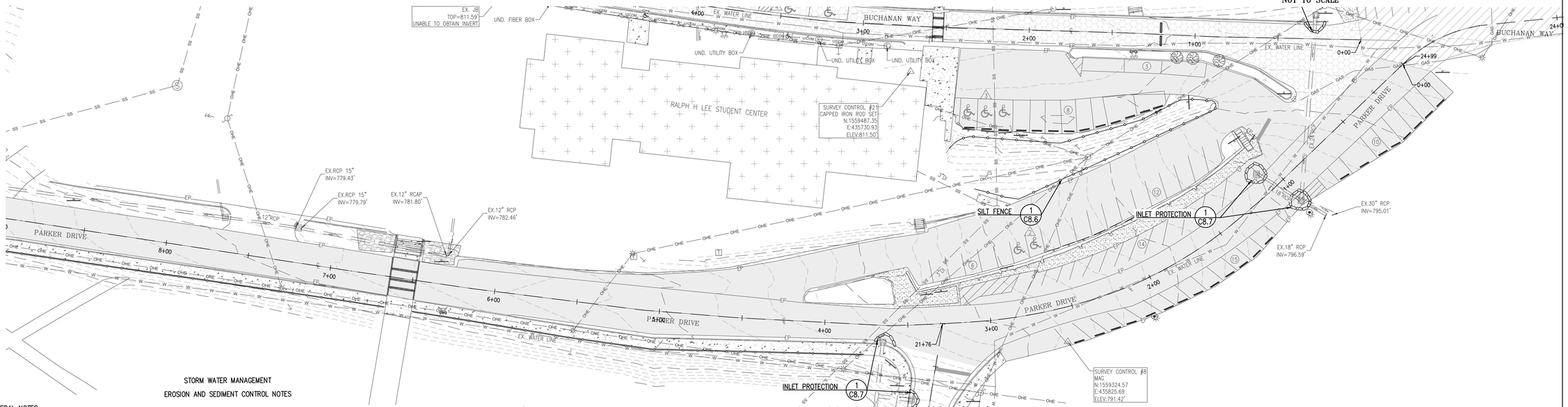

STORM WATER MANAGEMENT

EROSION AND SEDIMENT CONTROL NOTES

GENERAL NOTES

1.) The total disturbed area required to construct the improvements shown hereon is 50,877 s.f. or 1.2 acres (more than 1.0 acre), therefore ADEM/NPDES Permit will be required.

2.) The Site Contractor will be required to meet the following requirements during all phases of the project. Please note that all construction should be accomplished in accordance with the provisions of the National Pollutant Discharge Elimination System (NPDES) of the U. S. Environmental Protection Agency (EPA). This Erosion & Sediment Control Plan has been prepared for this project in order to show some of the Best Management Practices (BMPs) that are required to be implemented by the Site Contractor in order to comply with EPA regulations (CFR 40, Part 122) and the Alabama Department of Environmental Management (ADEM) guidelines under a NPDES General Permit. The Site Contractor is responsible for compliance with the Erosion & Sediment Control Plan (which includes the plans and details shown on this set of construction plans). It is also the Site Contractor's responsibility to prevent soil or sediment loss from the construction site. The Site Contractor shall not leave the site until all erosion control, sediment control, and storm water management practices are in place, have been inspected and found satisfactory; and all temporary practices have been properly removed.

EROSION AND SEDIMENT CONTROL

The project must be constructed according to the erosion and sediment control plans and in such a manner as to minimize adverse off-site effects of soil erosion and resulting sediment loss through the use of proper construction techniques; and by installing both temporary and permanent management practices. All soil-disturbing activities performed by the Site Contractor will be accomplished in such manner as to prevent loss of sediment from the construction site during rainfall events. To accomplish this, the project engineer recommends the specific steps noted below to be taken during construction. This list is not intended to be a comprehensive list of events and the Site Contractor should use his/her discretion to determine the best sequence of construction. All erosion and sediment control measures must be installed in a timely fashion to perform properly.

1) Immediately after mobilization but prior to initiation of any soil-disturbing activities, the Site Contractor will install all specified perimeter controls on the site. These practices have been designed to trap sediment produced during soil-disturbing activities, and to prevent off-site damage. It is recognized that some site preparation may be required to properly install these practices. In addition, the Site Contractor shall install a message board with all pertinent federal, state and local notices for workers, including OSHA guidelines, permits, etc. The Site Contractor shall install a commercial sanitation facility for the use of personnel working on the site and maintain the facility throughout the duration of construction. It is recommended that the port-a-john, the job site trailer, temporary construction worker parking, construction entrance, construction message board, concrete wash-out containment, and entrance wash-down area and containment should all be located near the construction entrance (see plan for location).

2) The recommended sequences for the installation and removal of erosion and sediment control measures is as follows: perimeter control measures (silt barriers and fencing, and construction entrance) installed at designated areas; cleaning of street(s) during construction; site grading (including temporary slope stabilization) as needed; installation of drainage system (including wattles, inlet protection, silt fences, etc.); installation of utilities; building construction; sidewalks: paving, final grading and spreading of topsoil; installation of sod or final ground cover and landscaping; removal of temporary practices and perimeter controls; and site cleanup.

3.) During all soil-disturbing activities, the Site Contractor will take appropriate steps using accepted construction methods to minimize exposure of unprotected soil and other construction materials to rainfall. Particular care must be exercised when dealing with topsoil stockpiles, fill material, or soil on slopes. The Contractor will maintain a date log of all soil disturbance activities or major grading operations, and of all management practice or control measure installations. All existing drainageways should remain until proposed storm system is functioning properly.

4.) If, during the course of construction, any area of soil (including stockpiles) remains exposed for more than thirteen calendar days or longer without suitable erosion control, then temporary stabilization measures should be installed. Suitable temporary stabilization measures are perimeter controls and ground protection measures (such as gravel bags, sand bags, seed/straw, hydroseed, mulch, erosion control blankets, wattles, silt fences, etc.) along all side-slope and down-slope borders of the disturbed area. Note that perimeter controls alone may not be successful; movement of large amounts of sediment produced by heavy rain on exposed soil could overwhelm such measures.

5.) At the Site Contractor's discretion, additional temporary erosion control practices (such as gravel bags, sand bags, seed/straw, wattles, and silt fences) may be installed along any down-slope of side-slope perimeter of a soil-disturbed area to prevent sediment movement. Anchored erosion control matting, mulches, or other acceptable methods may also be installed to stabilize any unprotected slopes during construction, and hold them to the appropriate grade. As site conditions warrant, the Site Contractor may also choose to modify the type or arrangement of specified practices to improve their effectiveness. The Site Contractor should present all proposed modifications to the erosion and sediment control plan to the Project Engineer for review and consultation.

6.) The Site Contractor or his/her qualified representative shall inspect all specified practices daily and after all rainfall events to insure that each specified practice remains intact and functioning properly. Any damage noted during such inspections shall be repaired promptly to restore the practice to original specifications. The Site Contractor will be responsible for maintenance of all erosion and sediment control practices as specified in the plans, including periodic re-grading, removal of sediment build-up, etc.

7.) Site Contractor should utilize water trucks to keep moisture content of subgrade at optimum level to improve compaction results and to reduce dust from construction traffic. When water is used for these purposes or to promote vegetation, the Site Contractor will prevent the escape of this water and any sediment it may carry from the construction site. In addition, a concrete wash area will be required with a system setup to capture all wash water and spoil/flushed concrete from delivery trucks.

8.) It is recommended that all fueling of heavy equipment be performed offsite where facilities are established to deal with emergency spill containment and emergency spill equipment and practices are in place to handle the potential hazards of equipment refueling. If the Site Contractor chooses to establish an on-site fueling area, then a fueling plan must be submitted to the project engineer outlining the emergency spill plan and spill containment measures that will be implemented by the Site Contractor to ensure that 100% of all fuel stored or brought to the site in excess of 100 gallons can be contained and that emergency clean-up measures will be stored onsite and that personnel will be trained to properly fuel the equipment and receive training for emergency spill containment and clean-up measures.

9.) Care must be exercised to prevent excessive off-site tracking of mud or sediment by construction vehicles. In addition to the specified gravel construction entrance, properly graveled transition areas should be established at all temporary site exits to assist in mud removal from departing vehicles. The Site Contractor shall be responsible for cleaning the adjacent street daily, or as directed by the city, when mud is tracked onto the street from the construction site.

10.) During the site cleanup prior to the final acceptance date, each temporary BMP will be completely removed and the area finished to the appropriate post-project condition. This involves final grading, and installation of sod or seed/straw on all bare soil areas or final ground cover as shown on the landscape plan. A minimum vegetation density of 85 percent (coverage requirement is 100%), or an equivalent sediment stabilization measure (geotextiles, jute netting, mulches, or gabions, etc.), is required until vegetation is established.

LEGEND

- WATTLES
- GRAVEL FILTER BAG AND WATTLE FILTER
- SILT FENCE
- DETAIL #1 ON SHEET CD.5 (1/D5)
- DRAINAGE FLOW ARROW
- 795 PROPOSED CONTOURS
- X. 728.35 SPOT ELEVATION
- BENCHMARK
- MILL EXISTING ASPHALT PAVING FOR OVERLAY
- FULL PAVEMENT RE-BUILD

N

−15 0 15 30 60
SCALE IN FEET
1" = 30'

JOHNSON & ASSOCIATES
ENGINEERING SURVEYING
1218 CHURCH STREET
HUNTSVILLE, ALABAMA 35801
1-256-533-7331
FAX 1-256-533-7332

REVISIONS

no	date	description

ALABAMA
NO. 16185
PROFESSIONAL
ENGINEER
STEPHEN L. WALKER
02/14/2022
SEAL

PHASE II - ROAD IMPROVEMENTS, PARKING LOT REPAIRS
ALABAMA A&M UNIVERSITY

Charles Williams & Associates, Inc
ARCHITECTS
3601 8TH AVE. SOUTH
BIRMINGHAM, ALABAMA 35222
PH: 205-250-0700
FAX: 205-250-0515

SHEET TITLE:
EROSION & SEDIMENT CONTROL PLAN
PARKER DRIVE
PROJECT NUMBER:
CWA 2019-06B JA 1791EN
DATE:
02-14-2022
DRAWN BY:
ATC/RDH
CHECKED BY:
SW/ATC

SHEET NUMBER
C5.5

STORM WATER MANAGEMENT

EROSION AND SEDIMENT CONTROL NOTES

GENERAL NOTES

1.) The total disturbed area required to construct the improvements shown hereon is 50,877 s.f. or 1.2 acres (more than 1.0 acre), therefore ADEM/NPDES Permit will be required.

2.) The Site Contractor will be required to meet the following requirements during all phases of the project. Please note that all construction should be accomplished in accordance with the provisions of the National Pollutant Discharge Elimination System (NPDES) of the U. S. Environmental Protection Agency (EPA). This Erosion & Sediment Control Plan has been prepared for this project in order to show some of the Best Management Practices (BMPs) that are required to be implemented by the Site Contractor in order to comply with EPA regulations (CFR 40, Part 122) and the Alabama Department of Environmental Management (ADEM) guidelines under a NPDES General Permit. The Site Contractor is responsible for compliance with the Erosion & Sediment Control Plan (which includes the plans and details shown on this set of construction plans). It is also the Site Contractor's responsibility to prevent soil or sediment loss from the construction site. The Site Contractor shall not leave the site until all erosion control, sediment control, and storm water management practices are in place, have been inspected and found satisfactory; and all temporary practices have been properly removed.

EROSION AND SEDIMENT CONTROL

The project must be constructed according to the erosion and sediment control plans and in such a manner as to minimize adverse off-site effects of soil erosion and resulting sediment loss through the use of proper construction techniques; and by installing both temporary and permanent management practices. All soil-disturbing activities performed by the Site Contractor will be accomplished in such manner as to prevent loss of sediment from the construction site during rainfall events. To accomplish this, the project engineer recommends the specific steps noted below to be taken during construction. This list is not intended to be a comprehensive list of events and the Site Contractor should use his/her discretion to determine the best sequence of construction. All erosion and sediment control measures must be installed in a timely fashion to perform properly.

1) Immediately after mobilization but prior to initiation of any soil-disturbing activities, the Site Contractor will install all specified perimeter controls on the site. These practices have been designed to trap sediment produced during soil-disturbing activities, and to prevent off-site damage. It is recognized that some site preparation may be required to properly install these practices. In addition, the Site Contractor shall install a message board with all pertinent federal, state and local notices for workers, including OSHA guidelines, permits, etc. The Site Contractor shall install a commercial sanitation facility for the use of personnel working on the site and maintain the facility throughout the duration of construction. It is recommended that the port-a-john, the job site trailer, temporary construction worker parking, construction entrance, construction message board, concrete wash-out containment, and entrance wash-down area and containment should all be located near the construction entrance (see plan for location).

2) The recommended sequences for the installation and removal of erosion and sediment control measures is as follows: perimeter control measures (silt barriers and fencing, and construction entrance) installed at designated areas; cleaning of street(s) during construction; site grading (including temporary slope stabilization) as needed; installation of drainage system (including wattles, inlet protection, silt fences, etc.); installation of utilities; building construction; sidewalks: paving, final grading and spreading of topsoil; installation of sod or final ground cover and landscaping; removal of temporary practices and perimeter controls; and site cleanup.

3.) During all soil-disturbing activities, the Site Contractor will take appropriate steps using accepted construction methods to minimize exposure of unprotected soil and other construction materials to rainfall. Particular care must be exercised when dealing with topsoil stockpiles, fill material, or soil on slopes. The Contractor will maintain a date log of all soil disturbance activities or major grading operations, and of all management practice or control measure installations. All existing drainageways should remain until proposed storm system is functioning properly.

4.) If, during the course of construction, any area of soil (including stockpiles) remains exposed for more than thirteen calendar days or longer without suitable erosion control, then temporary stabilization measures should be installed. Suitable temporary stabilization measures are perimeter controls and ground protection measures (such as gravel bags, sand bags, seed/straw, hydroseed, mulch, erosion control blankets, wattles, silt fences, etc.) along all side-slope and down-slope borders of the disturbed area. Note that perimeter controls alone may not be successful; movement of large amounts of sediment produced by heavy rain on exposed soil could overwhelm such measures.

5.) At the Site Contractor's discretion, additional temporary erosion control practices (such as gravel bags, sand bags, seed/straw, wattles, and silt fences) may be installed along any down-slope of side-slope perimeter of a soil-disturbed area to prevent sediment movement. Anchored erosion control matting, mulches, or other acceptable methods may also be installed to stabilize any unprotected slopes during construction, and hold them to the appropriate grade. As site conditions warrant, the Site Contractor may also choose to modify the type or arrangement of specified practices to improve their effectiveness. The Site Contractor should present all proposed modifications to the erosion and sediment control plan to the Project Engineer for review and consultation.

6.) The Site Contractor or his/her qualified representative shall inspect all specified practices daily and after all rainfall events to insure that each specified practice remains intact and functioning properly. Any damage noted during such inspections shall be repaired promptly to restore the practice to original specifications. The Site Contractor will be responsible for maintenance of all erosion and sediment control practices as specified in the plans, including periodic re-grading, removal of sediment build-up, etc.

7.) Site Contractor should utilize water trucks to keep moisture content of subgrade at optimum level to improve compaction results and to reduce dust from construction traffic. When water is used for these purposes or to promote vegetation, the Site Contractor will prevent the escape of this water and any sediment it may carry from the construction site. In addition, a concrete wash area will be required with a system setup to capture all wash water and spoil/flushed concrete from delivery trucks.

8.) It is recommended that all fueling of heavy equipment be performed offsite where facilities are established to deal with emergency spill containment and emergency spill equipment and practices are in place to handle the potential hazards of equipment refueling. If the Site Contractor chooses to establish an on-site fueling area, then a fueling plan must be submitted to the project engineer outlining the emergency spill plan and spill containment measures that will be implemented by the Site Contractor to ensure that 100% of all fuel stored or brought to the site in excess of 100 gallons can be contained and that emergency clean-up measures will be stored onsite and that personnel will be trained to properly fuel the equipment and receive training for emergency spill containment and clean-up measures.

9.) Care must be exercised to prevent excessive off-site tracking of mud or sediment by construction vehicles. In addition to the specified gravel construction entrance, properly graveled transition areas should be established at all temporary site exits to assist in mud removal from departing vehicles. The Site Contractor shall be responsible for cleaning the adjacent street daily, or as directed by the city, when mud is tracked onto the street from the construction site.

10.) During the site cleanup prior to the final acceptance date, each temporary BMP will be completely removed and the area finished to the appropriate post-project condition. This involves final grading, and installation of sod or seed/straw on all bare soil areas or final ground cover as shown on the landscape plan. A minimum vegetation density of 85 percent (coverage requirement is 100%), or an equivalent sediment stabilization measure (geotextiles, jute netting, mulches, or gabions, etc.), is required until vegetation is established.

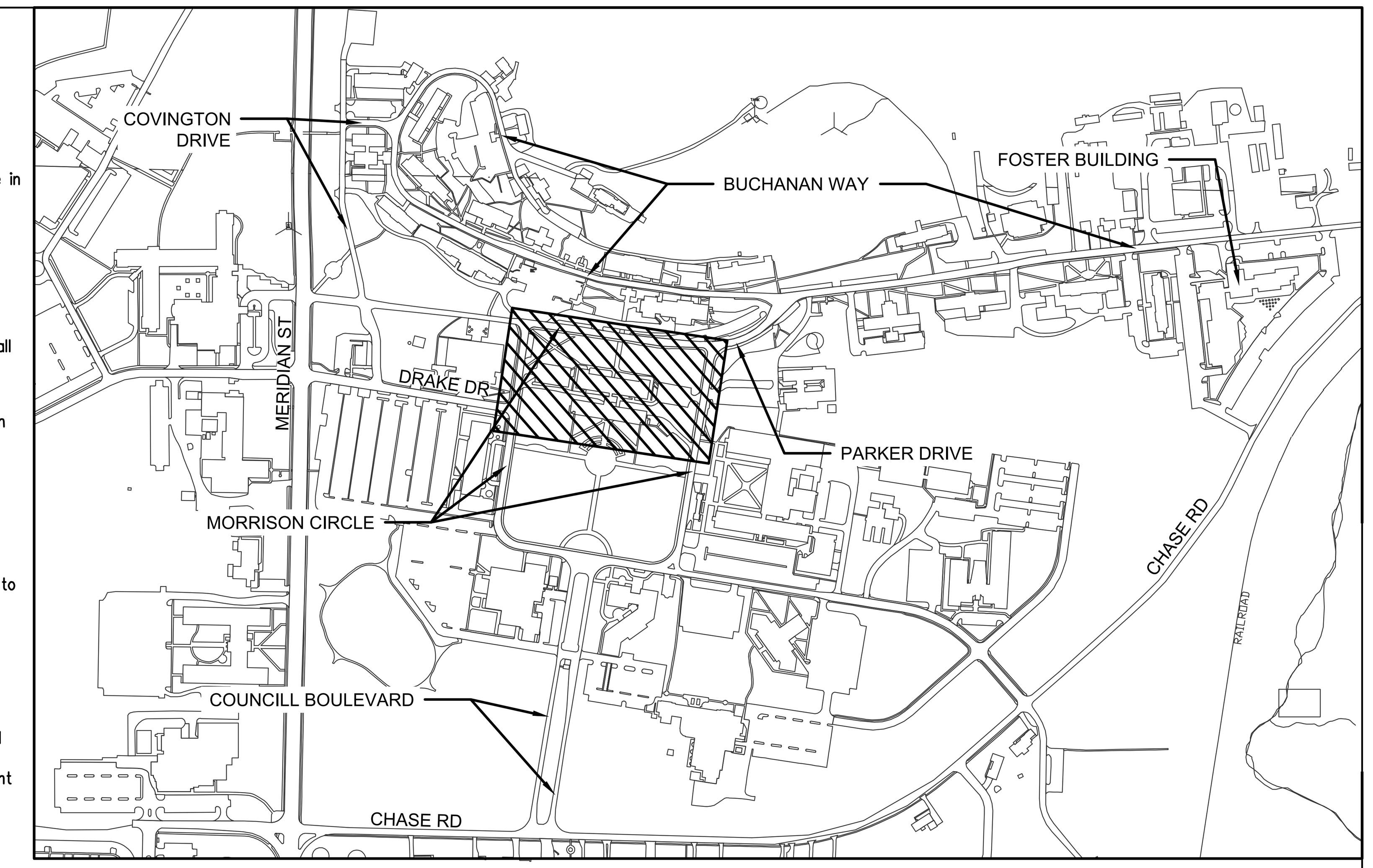

KEY MAP

NOT TO SCALE

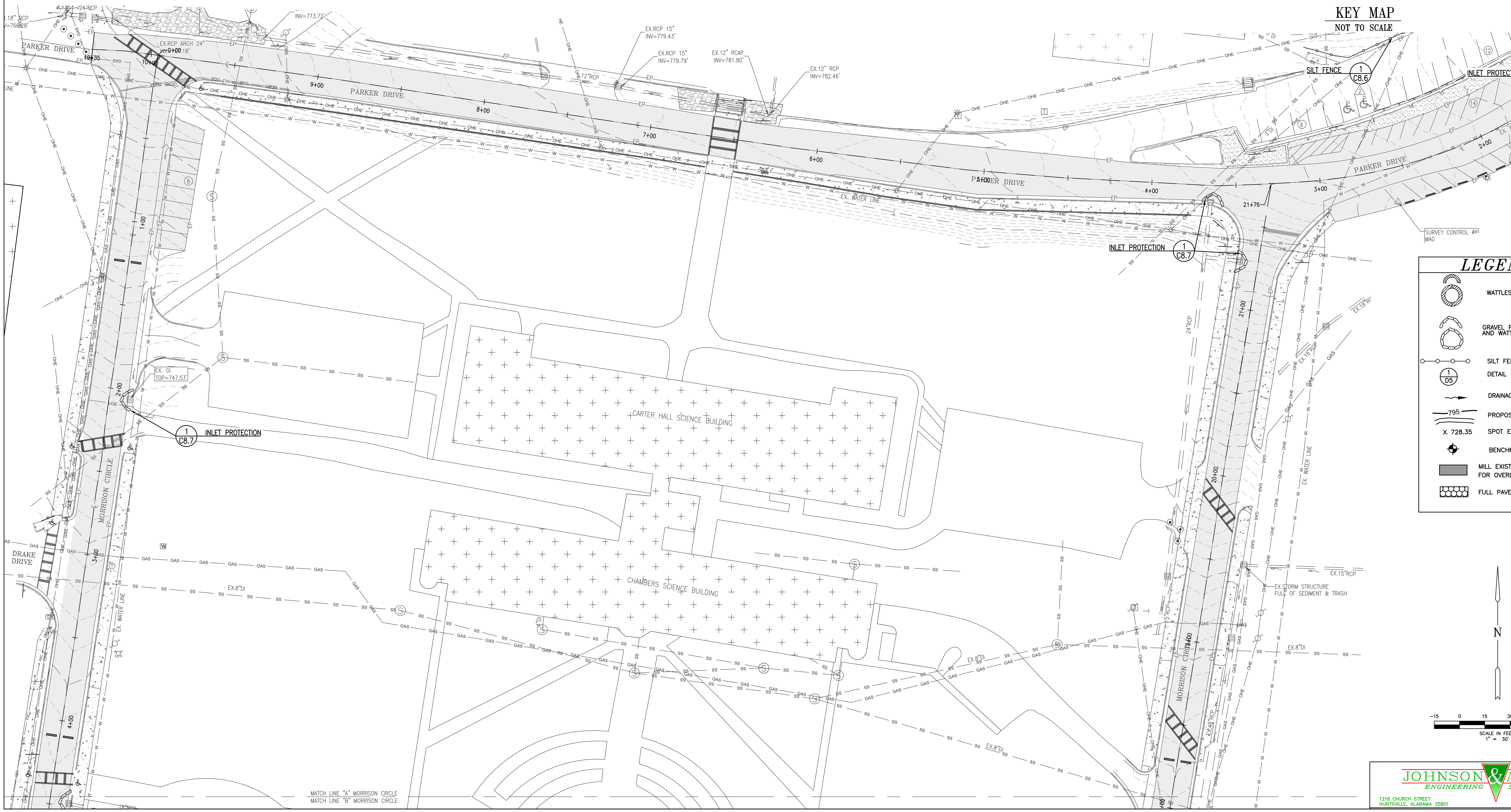

LEGEND

	WATTLES
	GRAVEL FILTER BAG AND WATTLE FILTER
	SILT FENCE
1 / D5	DETAIL #1 ON SHEET CD.5
	DRAINAGE FLOW ARROW
795	PROPOSED CONTOURS
X. 728.35	SPOT ELEVATION
	BENCHMARK
	MILL EXISTING ASPHALT PAVING FOR OVERLAY
	FULL PAVEMENT RE-BUILD

JOHNSON & ASSOCIATES
ENGINEERING SURVEYING
1218 CHURCH STREET
HUNTSVILLE, ALABAMA 35801
1-256-533-7331
FAX 1-256-533-7332

REVISIONS		
no.	date	description

SEAL
02/14/2022

PHASE II - ROAD IMPROVEMENTS, PARKING LOT REPAIRS
ALABAMA A&M UNIVERSITY

Charles Williams & Associates, Inc
ARCHITECTS
3601 8TH AVE. SOUTH
BIRMINGHAM, ALABAMA 35222
PH: 205-250-0700
FAX: 205-250-0515

SHEET TITLE:
EROSION & SEDIMENT CONTROL PLAN
MORRISON CIRCLE & PARKER DR.
PROJECT NUMBER:
CWA 2019-06B JA 1791EN
DATE:
02-14-2022
DRAWN BY:
ATC/RDH
CHECKED BY:
SW/ATC

SHEET NUMBER
C5.6

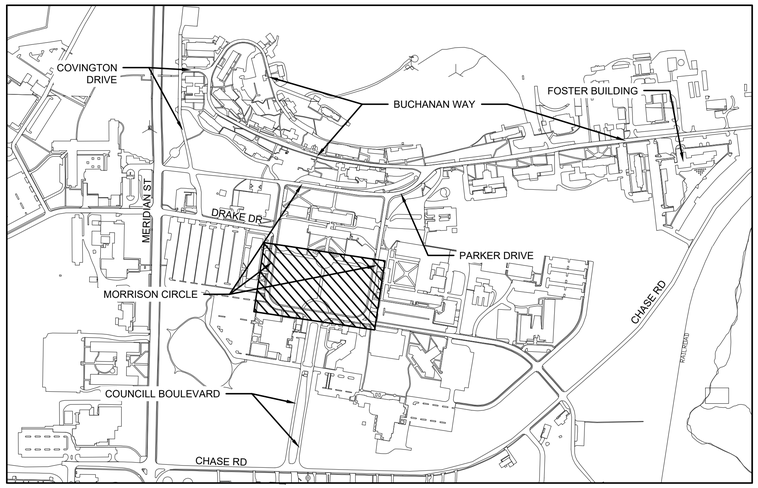

KEY MAP
NOT TO SCALE

LEGEND

- WATTLES
- GRAVEL FILTER BAG AND WATTLE FILTER
- SILT FENCE
- 1/D5 DETAIL #1 ON SHEET CD.5
- DRAINAGE FLOW ARROW
- 795 PROPOSED CONTOURS
- X 728.35 SPOT ELEVATION
- BENCHMARK
- MILL EXISTING ASPHALT PAVING FOR OVERLAY
- FULL PAVEMENT RE-BUILD

N

−15 0 15 30 60
SCALE IN FEET
1" = 30'

STORM WATER MANAGEMENT

EROSION AND SEDIMENT CONTROL NOTES

GENERAL NOTES

1.) The total disturbed area required to construct the improvement shown hereon is 50,877 s.f. or 1.2 acres (more than 1.0 acre), therefore ADEM/NPDES Permit will be required.

2.) The Site Contractor will be required to meet the following requirements during all phases of the project. Please note that all construction should be accomplished in accordance with the provisions of the National Pollutant Discharge Elimination System (NPDES) of the U. S. Environmental Protection Agency (EPA). This Erosion & Sediment Control Plan has been prepared for this project in order to show some of the Best Management Practices (BMPs) that are required to be implemented by the Site Contractor in order to comply with EPA regulations (CFR 40, Part 122) and the Alabama Department of Environmental Management (ADEM) guidelines under a NPDES General Permit. The Site Contractor is responsible for compliance with the Erosion & Sediment Control Plan (which includes the plans and details shown on this set of construction plans). It is also the Site Contractor's responsibility to prevent soil or sediment loss from the construction site. The Site Contractor shall not leave the site until all erosion control, sediment control, and storm water management practices are in place, have been inspected and found satisfactory; and all temporary practices have been properly removed.

EROSION AND SEDIMENT CONTROL

The project must be constructed according to the erosion and sediment control plans and in such a manner as to minimize adverse off-site effects of soil erosion and resulting sediment loss through the use of proper construction techniques; and by installing both temporary and permanent management practices. All soil-disturbing activities performed by the Site Contractor will be accomplished in such manner as to prevent loss of sediment from the construction site during rainfall events. To accomplish this, the project engineer recommends the specific steps noted below to be taken during construction. This list is not intended to be a comprehensive list of events and the Site Contractor should use his/her discretion to determine the best sequence of construction. All erosion and sediment control measures must be installed in a timely fashion to perform properly.

1) Immediately after mobilization but prior to initiation of any soil-disturbing activities, the Site Contractor will install all specified perimeter controls on the site. These practices have been designed to trap sediment produced during soil-disturbing activities, and to prevent off-site damage. It is recognized that some site preparation may be required to properly install these practices. In addition, the Site Contractor shall install a message board with all pertinent federal, state and local notices for workers, including OSHA guidelines, permits, etc. The Site Contractor shall install a commercial sanitation facility for the use of personnel working on the site and maintain the facility throughout the duration of construction. It is recommended that the port-a-john, the job site trailer, temporary construction worker parking, construction entrance, construction message board, concrete wash-out containment, and entrance wash-down area and containment should all be located near the construction entrance (see plan for location).

2) The recommended sequences for the installation and removal of erosion and sediment control measures is as follows: perimeter control measures (silt barriers and fencing, and construction entrance) installed at designated areas; cleaning of street(s) during construction; site grading (including temporary slope stabilization) as needed; installation of drainage system (including wattles, inlet protection, silt fences, etc.); installation of utilities; building construction; sidewalks: paving, final grading and spreading of topsoil; installation of sod or final ground cover and landscaping; removal of temporary practices and perimeter controls; and site cleanup.

3.) During all soil-disturbing activities, the Site Contractor will take appropriate steps using accepted construction methods to minimize exposure of unprotected soil and other construction materials to rainfall. Particular care must be exercised when dealing with topsoil stockpiles, fill material, or soil on slopes. The Contractor will maintain a date log of all soil disturbance activities or major grading operations, and of all management practice or control measure installations. All existing drainageways should remain until proposed storm system is functioning properly.

4.) If, during the course of construction, any area of soil (including stockpiles) remains exposed for more than thirteen calendar days or longer without suitable erosion control, then temporary stabilization measures should be installed. Suitable temporary stabilization measures are perimeter controls and ground protection measures (such as gravel bags, sand bags, seed/straw, hydroseed, mulch, erosion control blankets, wattles, silt fences, etc.) along all side-slope and down-slope borders of the disturbed area. Note that perimeter controls alone may not be successful; movement of large amounts of sediment produced by heavy rain on exposed soil could overwhelm such measures.

5.) At the Site Contractor's discretion, additional temporary erosion control practices (such as gravel bags, sand bags, seed/straw, wattles, and silt fences) may be installed along any down-slope of side-slope perimeter of a soil-disturbed area to prevent sediment movement. Anchored erosion control matting, mulches, or other acceptable methods may also be installed to stabilize any unprotected slopes during construction, and hold them to the appropriate grade. As site conditions warrant, the Site Contractor may also choose to modify the type or arrangement of specified practices to improve their effectiveness. The Site Contractor should present all proposed modifications to the erosion and sediment control plan to the Project Engineer for review and consultation.

6.) The Site Contractor or his/her qualified representative shall inspect all specified practices daily and after all rainfall events to insure that each specified practice remains intact and functioning properly. Any damage noted during such inspections shall be repaired promptly to restore the practice to original specifications. The Site Contractor will be responsible for maintenance of all erosion and sediment control practices as specified in the plans, including periodic re-grading, removal of sediment build-up, etc.

7.) Site Contractor should utilize water trucks to keep moisture content of subgrade at optimum level to improve compaction results and to reduce dust from construction traffic. When water is used for these purposes or to promote vegetation, the Site Contractor will prevent the escape of this water and any sediment it may carry from the construction site. In addition, a concrete wash area will be required with a system setup to capture all wash water and spoil/flushed concrete from delivery trucks.

8.) It is recommended that all fueling of heavy equipment be performed offsite where facilities are established to deal with emergency spill containment and emergency spill equipment and practices are in place to handle the potential hazards of equipment refueling. If the Site Contractor chooses to establish an on-site fueling area, then a fueling plan must be submitted to the project engineer outlining the emergency spill plan and spill containment measures that will be implemented by the Site Contractor to ensure that 100% of all fuel stored or brought to the site in excess of 100 gallons can be contained and that emergency clean-up measures will be stored onsite and that personnel will be trained to properly fuel the equipment and receive training for emergency spill containment and clean-up measures.

9.) Care must be exercised to prevent excessive off-site tracking of mud or sediment by construction vehicles. In addition to the specified gravel construction entrance, properly graveled transition areas should be established at all temporary site exits to assist in mud removal from departing vehicles. The Site Contractor shall be responsible for cleaning the adjacent street daily, or as directed by the city, when mud is tracked onto the street from the construction site.

10.) During the site cleanup prior to the final acceptance date, each temporary BMP will be completely removed and the area finished to the appropriate post-project condition. This involves final grading, and installation of sod or seed/straw on all bare soil areas or final ground cover as shown on the landscape plan. A minimum vegetation density of 85 percent (coverage requirement is 100%), or an equivalent sediment stabilization measure (geotextiles, jute netting, mulches, or gabions, etc.), is required until vegetation is established.

JOHNSON & ASSOCIATES
ENGINEERING SURVEYING
1218 CHURCH STREET
HUNTSVILLE, ALABAMA 35801
1-256-533-7331
FAX 1-256-533-7332

REVISIONS

no	date	description

ALABAMA
NO. 16185
PROFESSIONAL
ENGINEER
STEPHEN L. WALKER
02/14/2022
SEAL

PHASE II - ROAD IMPROVEMENTS, PARKING LOT REPAIRS

ALABAMA A&M UNIVERSITY

Charles Williams & Associates, Inc
ARCHITECTS
cwa
3601 6TH AVE. SOUTH
BIRMINGHAM, ALABAMA 35222
PH: 205-250-0700
FAX: 205-250-0515

SHEET TITLE:
EROSION & SEDIMENT CONTROL PLAN
MORRISON CIRCLE

PROJECT NUMBER:
CWA 2019-06B JA 1791EN

DATE:
02-14-2022

DRAWN BY:
ATC/RDH

CHECKED BY:
SW/ATC

SHEET NUMBER
C5.7

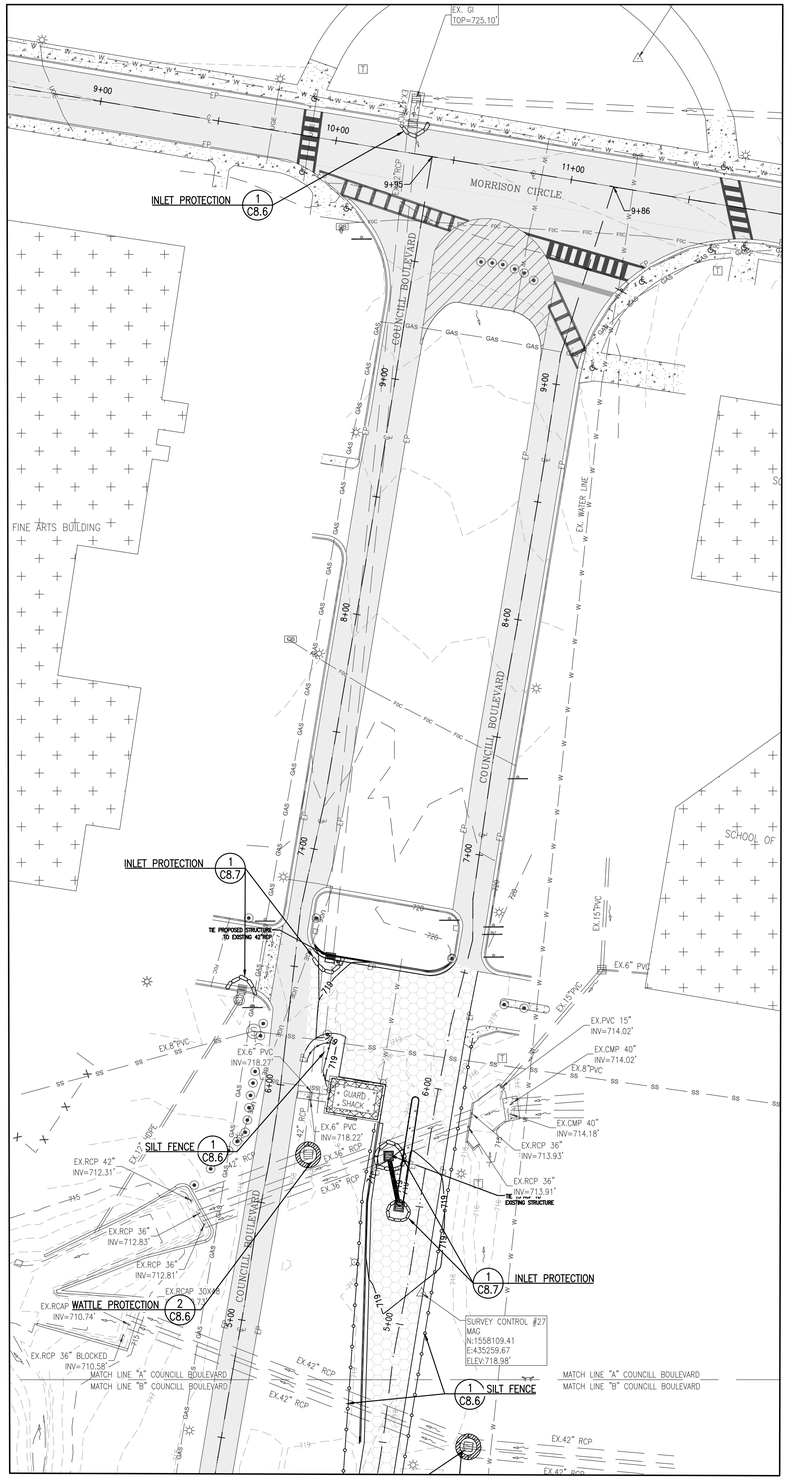

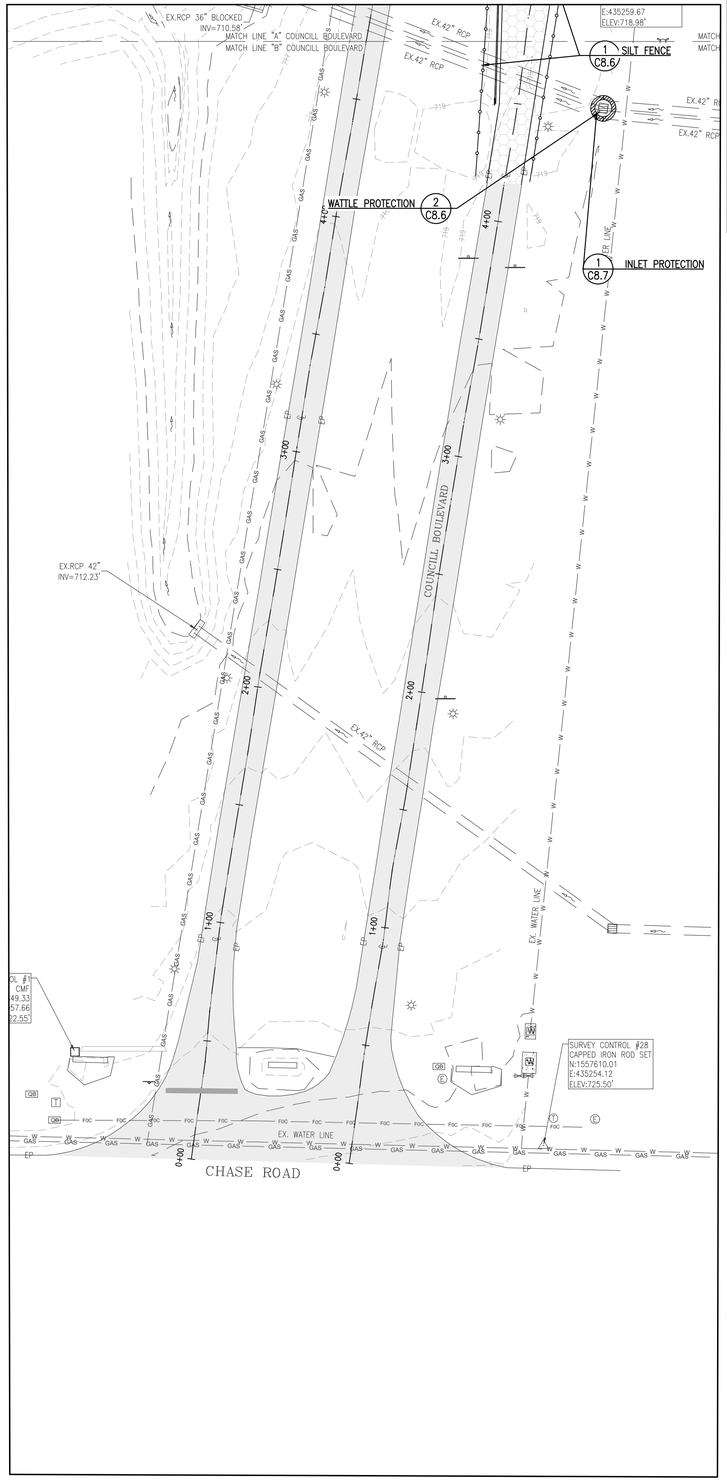

LEGEND

- WATTLES
- GRAVEL FILTER BAG AND WATTLE FILTER
- SILT FENCE
- 1 / D5 — DETAIL #1 ON SHEET CD.5
- DRAINAGE FLOW ARROW
- 795 — PROPOSED CONTOURS
- X. 728.35 — SPOT ELEVATION
- BENCHMARK
- MILL EXISTING ASPHALT PAVING FOR OVERLAY
- FULL PAVEMENT RE-BUILD

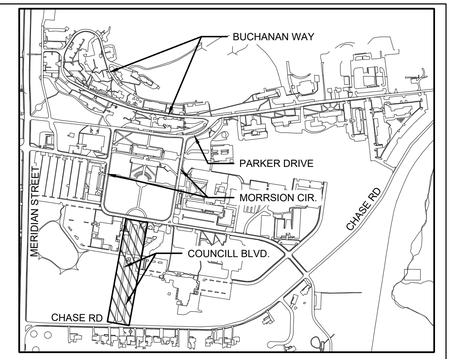

KEY MAP
NOT TO SCALE

STORM WATER MANAGEMENT
EROSION AND SEDIMENT CONTROL NOTES

GENERAL NOTES

1.) The total disturbed area required to construct the improvements shown hereon is 50,877 s.f. or 1.2 acres (more than 1.0 acre), therefore ADEM/NPDES Permit will be required.

2.) The Site Contractor will be required to meet the following requirements during all phases of the project. Please note that all construction should be accomplished in accordance with the provisions of the National Pollutant Discharge Elimination System (NPDES) of the U. S. Environmental Protection Agency (EPA). This Erosion & Sediment Control Plan has been prepared for this project in order to show some of the Best Management Practices (BMPs) that are required to be implemented by the Site Contractor in order to comply with EPA regulations (CFR 40, Part 122) and the Alabama Department of Environmental Management (ADEM) guidelines under a NPDES General Permit. The Site Contractor is responsible for compliance with the Erosion & Sediment Control Plan (which includes the plans and details shown on this set of construction plans). It is also the Site Contractor's responsibility to prevent soil or sediment loss from the construction site. The Site Contractor shall not leave the site until all erosion control, sediment control, and storm water management practices are in place, have been inspected and found satisfactory, and all temporary practices have been properly removed.

EROSION AND SEDIMENT CONTROL

The project must be constructed according to the erosion and sediment control plans and in such a manner as to minimize adverse off-site effects of soil erosion and resulting sediment loss through the use of proper construction techniques; and by installing both temporary and permanent management practices. All soil-disturbing activities performed by the Site Contractor will be accomplished in such manner as to prevent loss of sediment from the construction site during rainfall events. To accomplish this, the project engineer recommends the specific steps noted below to be taken during construction. This list is not intended to be a comprehensive list of events and the Site Contractor should use his/her discretion to determine the best sequence of construction. All erosion and sediment control measures must be installed in a timely fashion to perform properly.

1) Immediately after mobilization but prior to initiation of any soil-disturbing activities, the Site Contractor will install all specified perimeter controls on the site. These practices have been designed to trap sediment produced during soil-disturbing activities, and to prevent off-site damage. It is recognized that some site preparation may be required to properly install these practices. In addition, the Site Contractor shall install a message board with all pertinent federal, state and local notices for workers, including OSHA guidelines, permits, etc. The Site Contractor shall install a commercial sanitation facility for the use of personnel working on the site and maintain the facility throughout the duration of construction. It is recommended that the port-a-john, the job site trailer, temporary construction worker parking, construction entrance, construction message board, concrete wash-out containment, and entrance wash-down area and containment should all be located near the construction entrance (see plan for location).

2) The recommended sequences for the installation and removal of erosion and sediment control measures is as follows: perimeter control measures (silt barriers and fencing, and construction entrance) installed at designated areas; cleaning of street(s) during construction; site grading (including temporary slope stabilization) as needed; installation of drainage system (including wattles, inlet protection, silt fences, etc.); installation of utilities; building construction; sidewalks: paving, final grading and spreading of topsoil; installation of sod or final ground cover and landscaping; removal of temporary practices and perimeter controls; and site cleanup.

3.) During all soil-disturbing activities, the Site Contractor will take appropriate steps using accepted construction methods to minimize exposure of unprotected soil and other construction materials to rainfall. Particular care must be exercised when dealing with topsoil stockpiles, fill material, or soil on slopes. The Contractor will maintain a date log of all soil disturbance activities or major grading operations, and of all management practice or control measure installations. All existing drainageways should remain until proposed storm system is functioning properly.

4.) If, during the course of construction, any area of soil (including stockpiles) remains exposed for more than thirteen calendar days or longer without suitable erosion control, then temporary stabilization measures should be installed. Suitable temporary stabilization measures are perimeter controls and ground protection measures (such as gravel bags, sand bags, seed/straw, hydroseed, mulch, erosion control blankets, wattles, silt fences, etc.) along all side-slope and down-slope borders of the disturbed area. Note that perimeter controls alone may not be successful; movement of large amounts of sediment produced by heavy rain on exposed soil could overwhelm such measures.

5.) At the Site Contractor's discretion, additional temporary erosion contral practices (such as gravel bags, sand bags, seed/straw, wattles, and silt fences) may be installed along any down-slope of side-slope perimeter of a soil-disturbed area to prevent sediment movement. Anchored erosion control matting, mulches, or other acceptable methods may also be installed to stabilize any unprotected slopes during construction, and hold them to the appropriate grade. As site conditions warrant, the Site Contractor may also choose to modify the type or arrangement of specified practices to improve their effectiveness. The Site Contractor should present all proposed modifications to the erosion and sediment control plan to the Project Engineer for review and consultation.

6.) The Site Contractor or his/her qualified representative shall inspect all specified practices daily and after all rainfall events to insure that each specified practice remains intact and functioning properly. Any damage noted during such inspections shall be repaired promptly to restore the practice to original specifications. The Site Contractor will be responsible for maintenance of all erosion and sediment control practices as specified in the plans, including periodic re-grading, removal of sediment build-up, etc.

7.) Site Contractor should utilize water trucks to keep moisture content of subgrade at optimum level to improve compaction results and to reduce dust from construction traffic. When water is used for these purposes or to promote vegetation, the Site Contractor will prevent the escape of this water and any sediment it may carry from the construction site. In addition, a concrete wash area will be required with a system setup to capture all wash water and spoil/flushed concrete from delivery trucks.

8.) It is recommended that all fueling of heavy equipment be performed offsite where facilities are established to deal with emergency spill containment and emergency spill equipment and practices are in place to handle the potential hazards of equipment refueling. If the Site Contractor chooses to establish an on-site fueling area, then a fueling plan must be submitted to the project engineer outlining the emergency spill plan and spill containment measures that will be implemented by the Site Contractor to ensure that 100% of all fuel stored or brought to the site in excess of 100 gallons can be contained and that emergency clean-up measures will be stored onsite and that personnel will be trained to properly fuel the equipment and receive training for emergency spill containment and clean-up measures.

9.) Care must be exercised to prevent excessive off-site tracking of mud or sediment by construction vehicles. In addition to the specified gravel construction entrance, properly graveled transition areas should be established at all temporary site exits to assist in mud removal from departing vehicles. The Site Contractor shall be responsible for cleaning the adjacent street daily, or as directed by the city, when mud is tracked onto the street from the construction site.

10.) During the site cleanup prior to the final acceptance date, each temporary BMP will be completely removed and the area finished to the appropriate post-project condition. This involves final grading, and installation of sod or seed/straw on all bare soil areas or final ground cover as shown on the landscape plan. A minimum vegetation density of 85 percent (coverage requirement is 100%), or an equivalent sediment stabilization measure (geotextiles, jute netting, mulches, or gabions, etc.), is required until vegetation is established.

N

−15 0 15 30 60
SCALE IN FEET
1" = 30'

JOHNSON & ASSOCIATES
ENGINEERING SURVEYING
1218 CHURCH STREET
HUNTSVILLE, ALABAMA 35801
1-256-533-7331
FAX 1-256-533-7332

REVISIONS		
no	date	description

ALABAMA
NO. 16185
PROFESSIONAL
ENGINEER
STEPHEN L. WALKER
02/14/2022
SEAL

PHASE II - ROAD IMPROVEMENTS, PARKING LOT REPAIRS
ALABAMA A&M UNIVERSITY

Charles Williams & Associates, Inc
ARCHITECTS
3801 6TH AVE. SOUTH
BIRMINGHAM, ALABAMA 35222
PH: 205-250-0700
FAX: 205-250-0515

SHEET TITLE:
EROSION & SEDIMENT CONTROL PLAN
COUNCILL BLVD
PROJECT NUMBER:
CWA 2019-06B JA 1791EN
DATE:
02-14-2022
DRAWN BY:
ATC/RDH
CHECKED BY:
SW/ATC

SHEET NUMBER
C5.8

STORM WATER MANAGEMENT

EROSION AND SEDIMENT CONTROL NOTES

GENERAL NOTES

1.) The total disturbed area required to construct the improvements shown hereon is 50,877 s.f. or 1.2 acres (more than 1.0 acre), therefore ADEM/NPDES Permit will be required.

2.) The Site Contractor will be required to meet the following requirements during all phases of the project. Please note that all construction should be accomplished in accordance with the provisions of the National Pollutant Discharge Elimination System (NPDES) of the U. S. Environmental Protection Agency (EPA). This Erosion & Sediment Control Plan has been prepared for this project in order to show some of the Best Management Practices (BMPs) that are required to be implemented by the Site Contractor in order to comply with EPA regulations (CFR 40, Part 122) and the Alabama Department of Environmental Management (ADEM) guidelines under a NPDES General Permit. The Site Contractor is responsible for compliance with the Erosion & Sediment Control Plan (which includes the plans and details shown on this set of construction plans). It is also the Site Contractor's responsibility to prevent soil or sediment loss from the construction site. The Site Contractor shall not leave the site until all erosion control, sediment control, and storm water management practices are in place, have been inspected and found satisfactory, and all temporary practices have been properly removed.

EROSION AND SEDIMENT CONTROL

The project must be constructed according to the erosion and sediment control plans and in such a manner as to minimize adverse off-site effects of soil erosion and resulting sediment loss through the use of proper construction techniques; and by installing both temporary and permanent management practices. All soil-disturbing activities performed by the Site Contractor will be accomplished in such manner as to prevent loss of sediment from the construction site during rainfall events. To accomplish this, the project engineer recommends the specific steps noted below to be taken during construction. This list is not intended to be a comprehensive list of events and the Site Contractor should use his/her discretion to determine the best sequence of construction. All erosion and sediment control measures must be installed in a timely fashion to perform properly.

1) Immediately after mobilization but prior to initiation of any soil-disturbing activities, the Site Contractor will install all specified perimeter controls on the site. These practices have been designed to trap sediment produced during soil-disturbing activities, and to prevent off-site damage. It is recognized that some site preparation may be required to properly install these practices. In addition, the Site Contractor shall install a message board with all pertinent federal, state and local notices for workers, including OSHA guidelines, permits, etc. The Site Contractor shall install a commercial sanitation facility for the use of personnel working on the site and maintain the facility throughout the duration of construction. It is recommended that the port-a-john, the job site trailer, temporary construction worker parking, construction entrance, construction message board, concrete wash-out containment, and entrance wash-down area and containment should all be located near the construction entrance (see plan for location).
2) The recommended sequences for the installation and removal of erosion and sediment control measures is as follows: perimeter control measures (silt barriers and fencing, and construction entrance) installed at designated areas; cleaning of street(s) during construction; site grading (including temporary slope stabilization) as needed; installation of drainage system (including wattles, inlet protection, silt fences, etc.); installation of utilities; building construction; sidewalks: paving, final grading and spreading of topsoil; installation of sod or final ground cover and landscaping; removal of temporary practices and perimeter controls; and site cleanup.
3.) During all soil-disturbing activities, the Site Contractor will take appropriate steps using accepted construction methods to minimize exposure of unprotected soil and other construction materials to rainfall. Particular care must be exercised when dealing with topsoil stockpiles, fill material, or soil on slopes. The Contractor will maintain a date log of all soil disturbance activities or major grading operations, and of all management practice or control measure installations. All existing drainageways should remain until proposed storm system is functioning properly.
4.) If, during the course of construction, any area of soil (including stockpiles) remains exposed for more than thirteen calendar days or longer without suitable erosion control, then temporary stabilization measures should be installed. Suitable temporary stabilization measures are perimeter controls and ground protection measures (such as gravel bags, sand bags, seed/straw, hydroseed, mulch, erosion control blankets, wattles, silt fences, etc.) along all side-slope and down-slope borders of the disturbed area. Note that perimeter controls alone may not be successful; movement of large amounts of sediment produced by heavy rain on exposed soil could overwhelm such measures.
5.) At the Site Contractor's discretion, additional temporary erosion control practices (such as gravel bags, sand bags, seed/straw, wattles, and silt fences) may be installed along any down-slope of side-slope perimeter of a soil-disturbed area to prevent sediment movement. Anchored erosion control matting, mulches, or other acceptable methods may also be installed to stabilize any unprotected slopes during construction, and hold them to the appropriate grade. As site conditions warrant, the Site Contractor may also choose to modify the type or arrangement of specified practices to improve their effectiveness. The Site Contractor should present all proposed modifications to the erosion and sediment control plan to the Project Engineer for review and consultation.
6.) The Site Contractor or his/her qualified representative shall inspect all specified practices daily and after all rainfall events to insure that each specified practice remains intact and functioning properly. Any damage noted during such inspections shall be repaired promptly to restore the practice to original specifications. The Site Contractor will be responsible for maintenance of all erosion and sediment control practices as specified in the plans, including periodic re-grading, removal of sediment build-up, etc.
7.) Site Contractor should utilize water trucks to keep moisture content of subgrade at optimum level to improve compaction results and to reduce dust from construction traffic. When water is used for these purposes or to promote vegetation, the Site Contractor will prevent the escape of this water and any sediment it may carry from the construction site. In addition, a concrete wash area will be required with a system setup to capture all wash water and spoil/flushed concrete from delivery trucks.
8.) It is recommended that all fueling of heavy equipment be performed offsite where facilities are established to deal with emergency spill containment and emergency spill equipment and practices are in place to handle the potential hazards of equipment refueling. If the Site Contractor chooses to establish an on-site fueling area, then a fueling plan must be submitted to the project engineer outlining the emergency spill plan and spill containment measures that will be implemented by the Site Contractor to ensure that 100% of all fuel stored or brought to the site in excess of 100 gallons can be contained and that emergency clean-up measures will be stored onsite and that personnel will be trained to properly fuel the equipment and receive training for emergency spill containment and clean-up measures.
9.) Care must be exercised to prevent excessive off-site tracking of mud or sediment by construction vehicles. In addition to the specified gravel construction entrance, properly graveled transition areas should be established at all temporary site exits to assist in mud removal from departing vehicles. The Site Contractor shall be responsible for cleaning the adjacent street daily, or as directed by the city, when mud is tracked onto the street from the construction site.
10.) During the site cleanup prior to the final acceptance date, each temporary BMP will be completely removed and the area finished to the appropriate post-project condition. This involves final grading, and installation of sod or seed/straw on all bare soil areas or final ground cover as shown on the landscape plan. A minimum vegetation density of 85 percent (coverage requirement is 100%), or an equivalent sediment stabilization measure (geotextiles, jute netting, mulches, or gabions, etc.), is required until vegetation is established.

LEGEND

- WATTLES
- GRAVEL FILTER BAG AND WATTLE FILTER
- SILT FENCE
- 1 / D5 — DETAIL #1 ON SHEET CD.5
- DRAINAGE FLOW ARROW
- 795 — PROPOSED CONTOURS
- X. 728.35 — SPOT ELEVATION
- BENCHMARK
- MILL EXISTING ASPHALT PAVING FOR OVERLAY
- FULL PAVEMENT RE-BUILD

N

-15 0 15 30 60

SCALE IN FEET
1" = 30'



KEY MAP
NOT TO SCALE

JOHNSON & ASSOCIATES
ENGINEERING SURVEYING
1218 CHURCH STREET
HUNTSVILLE, ALABAMA 35801
1-256-533-7331
FAX 1-256-533-7332

REVISIONS		
no	date	description

ALABAMA
NO. 16185
PROFESSIONAL
ENGINEER
STEPHEN L. WALKER
02/14/2022
SEAL

PHASE II - ROAD IMPROVEMENTS, PARKING LOT REPAIRS

ALABAMA A&M UNIVERSITY

Charles Williams & Associates, Inc
ARCHITECTS
3601 8TH AVE. SOUTH
BIRMINGHAM, ALABAMA 35222
PH: 205-250-0700
FAX: 205-250-0515

SHEET TITLE:
EROSION & SEDIMENT CONTROL PLAN
FOSTER HALL CENTER DRIVE

PROJECT NUMBER:
CWA 2019-06B JA 1791EN

DATE:
02-14-2022

DRAWN BY:
ATC/RDH

CHECKED BY:
SW/ATC

SHEET NUMBER
C5.9

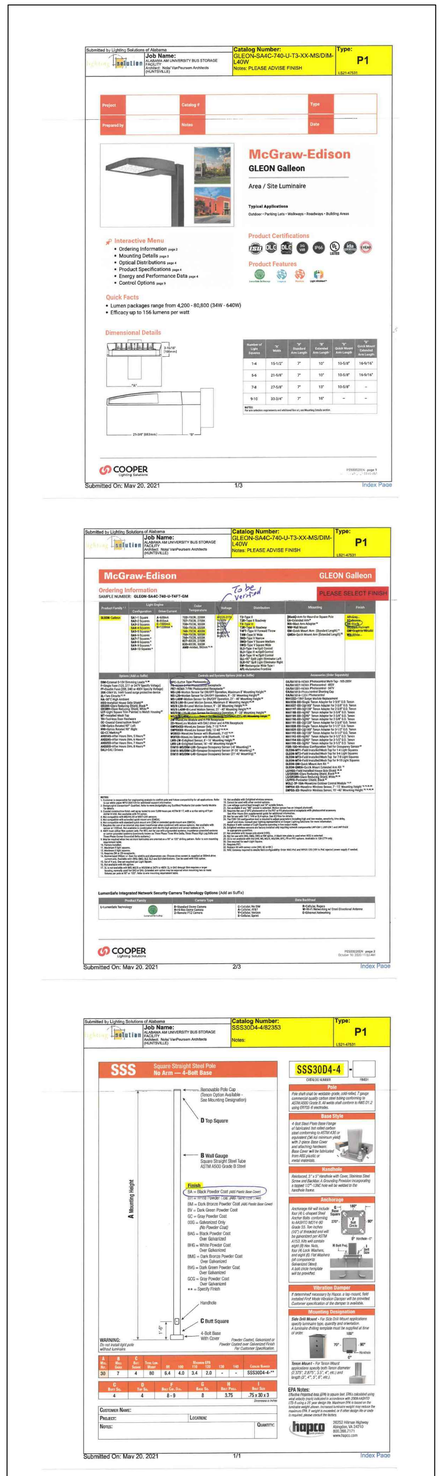

1 / C6.1 **ELECTRICAL LIGHT POLE**

BASE & LED LIGHT FIXTURE SPECIFICATION & REQUIREMENTS. AN ALABAMA LICENSED ELECTRICAL ENGINEER WILL NEED TO PROVIDE FINAL SITE LIGHTING PLANS & SPEC.S (NOT TO SCALE)



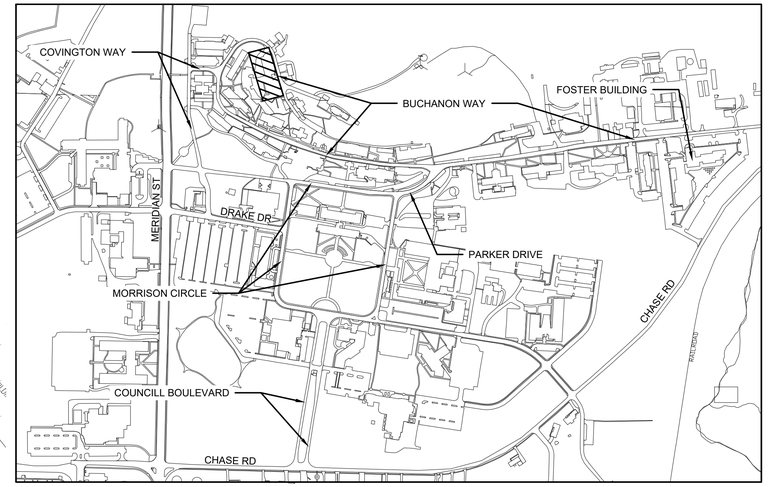

KEY MAP
NOT TO SCALE

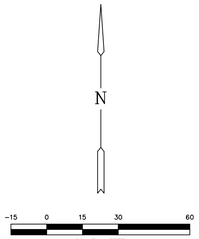

NOTES

1. CONTRACTOR IS RESPONSIBLE FOR AND SHOULD VERIFY THE LOCATION OF ALL UNDERGROUND UTILITIES PRIOR TO CONSTRUCTION. ALL BURIED UTILITIES MAY NOT HAVE BEEN LOCATED DURING THE TOPOGRAPHIC SURVEY. UTILITIES SHOWN HEREON ARE APPROXIMATE AND MAY NOT REFLECT THE ACTUAL FIELD LOCATION OR THE PRESENCE OF OTHER UNDERGROUND UTILITIES.
2. CONTRACTOR IS RESPONSIBLE TO TIE ALL EXISTING FIRE HYDRANTS, WATER CABINETS AND SERVICES TO NEW WATER MAIN AFTER MAIN IS INSTALLED.
3. CAUTION: CONTRACTOR SHALL EXERCISE EXTREME CAUTION WHEN WORKING ABOVE AND AROUND EXISTING UTILITIES.

LEGEND

- EXISTING WATER MAIN
- PROPOSED WATER MAIN
- EXISTING FIRE HYDRANT
- PROPOSED FIRE HYDRANT
- PROPOSED GATE VALVE
- TEE
- WATER SERVICE LINE
- FLUSHING VALVE ASSEMBLY
- REDUCER
- MILL EXISTING ASPHALT PAVING FOR OVERLAY
- FULL PAVEMENT RE-BUILD
- NEW LED LIGHT POLE & FIXTURE

JOHNSON & ASSOCIATES
ENGINEERING SURVEYING
1218 CHURCH STREET
HUNTSVILLE, ALABAMA 35801
1-256-533-7331
FAX 1-256-533-7332

REVISIONS

no	date	description

ALABAMA
JAMES H. WALKER
NO. 16165
PROFESSIONAL
ENGINEER
STEPHEN L. WALKER
02/14/2022
SEAL

PHASE II - ROAD IMPROVEMENTS, PARKING LOT REPAIRS
ALABAMA A&M UNIVERSITY

Charles Williams & Associates, Inc
ARCHITECTS
3601 8TH AVE. SOUTH
BIRMINGHAM, ALABAMA 35222
PH: 205-250-0700
FAX: 205-250-0515

SHEET TITLE:
UTILITY PLAN
PARKING LOT 1
PROJECT NUMBER:
CWA 2019-06B JA 1791EN
DATE:
02-14-2022
DRAWN BY:
ATC/RDH
CHECKED BY:
SW/ATC

SHEET NUMBER
C6.1

GENERAL NOTES

1. Contractor is responsible for making application and paying for necessary permits.

2. The Contractor is to prevent the destruction of all survey monuments, bench marks, property corners and all other survey points. Where the removal of such points is necessary for the accomplishment of the work, the Contractor is to inform the Engineer in writing, prior to the disturbance of any point, and is not to disturb the point until written permission to do so has been issued by the Engineer.

3. All existing trees outside of the limits of work are to be protected during the accomplishment of the work, and are not to be damaged in any manner.

4. Contractor shall repair any damage to existing streets or driveways that is created during construction activities.

5. All boulders, debris, excess construction materials, material generated from demolition of existing structures and facilities or trash to be removed from site at contractor's expense.

6. Contractor shall be responsible for having existing utilities located prior to excavation. Johnson & Associates assumes no responsibility as to the accuracy or completeness of utilities depicted on these drawings.

7. All storm drainage pipes shall be HDPE pipe per ASTM f2648 or reinforced concrete Class III per ASTM C–76 unless otherwise noted. Pipe bedding shall be Class "C" trench bedding except as noted. Compacted granular material for bedding may be required based on unsuitable ground water conditions or conditions such that shaped trench bottom cannot be properly obtained by the Contractor.

8. Pavement cuts shall be repaired with material in kind to that removed.

9. Rip Rap shall be Class I, in accordance with Section 814, ALDOT, and shall be grouted where indicated on the plans.

10. In accordance with generally accepted construction practices, the contractor will be solely and completely responsible for conditions of the jobsite, including safety of all persons and property during performance of the work. This requirement will apply continuously and not be limited to normal working hours. Contractor shall provide adequate traffic control devices and safety measures for construction work within public and/or private right–of–ways in accordance with the Manual on Uniform Traffic Control Devices for Streets and Highways. The duty of the Engineer to conduct construction review of the contractor's performance is not intended to include review of the adequacy of the Contractor's safety measures, in, on or near the construction site.

11. The storm drainage system for this site has been designed for a 25 year storm event for ditch designs and a 10 year storm event for pipe designs, unless otherwise noted, in accordance with the standards of the City of Huntsville. With regard to the system capacity, no warranty is expressed or implied for storms of greater intensity.

12. This document, and the ideas and designs incorporated herein as an instrument of professional services, is the property of Johnson & Associates, Inc., and is not to be used, in whole or part, for any other project without the written authorization of Johnson & Associates, Inc.

EARTHWORK GENERAL NOTES

1. Refer to the Geo–techincal Engineer's report for site recommendations for undercut, removal and replacement of unsuitable soil in pavement areas and building foundation areas.

2. Site topography maps and other topographic data shown on the plans or included in the specifications are for the information of the Contractor. The Contractor shall make such additional investigations as required to acquaint himself adequately with the site topography, and the subsurface soil conditions for preparation of his bid, and for the successful execution of the work.

3. All proposed contour elevations shown are finish grade.

4. Protection of Work: The Contractor is to be solely responsible for the protection of his work. Such grading is the responsibility of the Contractor and will be at no additional cost to the Owner. The Owner may direct the Contractor to perform necessary grading and drainage to prevent surface run off from damaging the work.

5. Contractor shall be required to install silt fences, wattles, etc., to prevent erosion of disturbed earth and fill areas. Silt fences shall be required, if necessary to prevent loose dirt from washing onto streets and adjacent property. Contractor shall be responsible for erosion and sediment control until final inspection by city.

6. All earth fill shall be compacted to 95% of the maximum dry density, plus or minus 2% of optimum moisture (ASTM–D698), except for earth fills under roads & buildings which are to comply with paving specifications (VERIFY WITH GEOTECHICAL REPORT).

7. Earth fill shall be placed in uniform layers or lifts not exceeding 8" loose thickness, per (VERIFY WITH GEOTECHICAL REPORT.)

8. Earth fill shall be placed in accordance with Section 210, ALDOT. Earth fill under the building shall also meet the requirements of the architect's plans and specifications. (VERIFY WITH GEOTECHICAL REPORT)

SEEDING NOTES

Seeding & sod specifications shown on Landscape Plan shall take precedence if there are any conflicts with the seeding notes shown below.

Contractor is required to furnish all materials, equipment and labor necessary for the seeding of areas specified on the grading plans. All specified surface areas shall be seeded according to the specifications listed below.

1. Topsoil shall be stripped and stock piled. A minimum of 12 inches of conditioned and amended topsoil shall be respread over all areas for seed–ing and conform with the grading plan.

2. Seeding shall be:

A) "Rebel" or "Falcon" Fescue seed (till April 15th) with 95% germination and 8 lbs. per 1,000 S.F.

B) Bermuda seed (from April 15th to August 15th) with 95% germination and 2 lbs. per 1,000 S.F.

3. Soil Amendment shall be recommended using lime or sulfur to achieve a soil ph of 5.5 – 6.5.

4. 2–4–D Roundup or equivalent post–emergent herbicide shall be required to kill existing weeds. Treflan, Dactal or equivalent pre–emergent herbicide shall be required for all seeded areas to prevent weed germination.

5. Protection of seeded areas on steep slopes shall be provided using a Standard Excelsior Erosion Control Blanket, by Erosion Control Systems, Inc. Tuscaloosa, AL, or equivalent where indicated on the grading plan. Application of "Excelsior" Blanket shall comply with manufacturer's recommendations. Apply blanket to the slope after proper preparation and seeding of ground.

PAVEMENT CONSTRUCTION GENERAL NOTES

1. ALDOT, shall mean State of Alabama Highway Department Standard Specifications for Highway Construction, Latest Edition.

2. Crushed Aggregate Base Course Plant Mixed shall be placed in accordance with Section 301 ALDOT. All materials shall be in accordance with Section 825, Type B, 100% compaction.

3. Portland Cement Concrete Pavement shall be placed in accordance with Section 450, ALDOT.

4. Bituminous Tack Coat shall be placed in accordance with Section 405, ALDOT. Tack Coat shall be NTS–1HM.

5. Bituminous Concrete Wearing Surface Layer shall be placed in accordance with Section 424, ALDOT. Use ALDOT 424A–340.

6. The site shall be cleared and all unsuitable material removed prior to placing and compacting embankments.

7. All subgrades shall be cleared and grubbed, scarified to a depth of 6", and then recompacted to 100% of the maximum dry density, plus or minus 2% of optimum moisture, ASTM–D698.

8. In rock excavation a minimum of 1 foot of soil shall be placed over rock prior to placement of Base Material.

9. All work inside the ALDOT right–of–way shall be in accordance with ALDOT specifications and requirements.

REINFORCED CONCRETE NOTES

1. All concrete shall be air entrained 3000 psi minimum compressive strength at 28 days, Class "A" unless otherwise noted.

2. All construction joints shall be constructed with shear keys in accordance with the shear key detail located on sheet C8.1.

3. All reinforcing steel shall be Grade 60 deformed, and shall conform to ASTM A615, for Billet Steel.

4. Lap Splices and Bar Embedments shall be in accordance with the table on sheet C8.1.

5. Concrete Air Content and Slump shall be in accordance with the table on sheet C8.1.

6. All reinforcing bars shall be shop bent in accordance with the table on sheet C8.1.

7. Heating of reinforcing bars to bend them, or straighten them will not be allowed.

8. All Welded Wire Fabric shall conform to ASTM A185, smooth fabric with an ASTM yield strength of 65,000 psi.

SHEAR KEY DETAIL

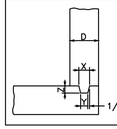

WALL THICKNESS (D)	NOMINAL KEY SIZE	X	Y	Z
4" – 7"	2" X 2"	1 1/2"	1"	1 1/2"
8" – 13"	2" X 4"	3 1/2"	3"	1 1/2"
14" – 20"	2" X 6"	5 1/2"	5"	1 1/2"
SEE DRAWINGS	2" X 8"	7 1/4"	6 3/4"	1 1/2"
	2" X 10"	9 1/4"	8 3/4"	1 1/2"
	4" X 4"	3 1/2"	3"	3 1/2"
	4" X 6"	5 1/2"	5"	3 1/2"
	4" X 8"	7 1/4"	6 3/4"	3 1/2"
	4" X 10"	9 1/4"	8 3/4"	3 1/2"
	4" X 12"	11 1/4"	10 3/4"	3 1/2"

BAR BEND TABLE

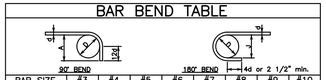

BAR SIZE	#3	#4	#5	#6	#7	#8	#9	#10
DIAMETER (d)	0.375"	0.5"	0.625"	0.75"	.875"	1.0"	1.128"	1.27"
D	2.25"	3.0"	3.75"	4.50"	5.25"	6.0"	9.02"	10.16"
A	6"	8"	10"	12"	14"	16"	19"	22"
J	3"	4"	5"	6"	7"	8"	11.25"	12.75"

CONCRETE AIR CONTENT TABLE

NOMINAL MAXIMUM SIZE COARSE AGGREGATE (INCHES)	TOTAL AIR CONTENT PERCENT BY VOLUME
3/4	4 TO 8
1	3.5 TO 6.5
1 1/2	3 TO 6

DOWEL BAR SPACING TABLE

d	SPACING
6"	18" O.C.
9"	15" O.C.
12"	12" O.C.
16"	8" O.C.

SLUMP TABLE

TYPE OF CONSTRUCTION	SLUMP (INCHES) MAX.	MIN.
REINFORCED FOOTINGS AND SLABS	3	1
REINFORCED WALLS	4	1
BACKFILL CONCRETE	6	3

UNLESS OTHERWISE INDICATED SHEAR KEY SIZES SHALL BE IN ACCORDANCE WITH THE FOLLOWING TABLE

WALL THICKNESS (D)	SHEAR KEY SIZE
4" – 7"	2" X 2"
8" – 13"	2" X 4"
14" – 20"	2" X 6"
21" – 26"	2" X 8"

LAP SPLICE AND MINIMUM BAR EMBEDMENT TABLE

BAR SIZE	LAP SPLICE LENGTH	EMBEDMENT LENGTH
#4	20"	12"
#5	26"	15"
#6	33"	19"
#7	45"	26"
#8	59"	35"
#9	74"	44"
#10	95"	56"

NOTE: ALL CONSTRUCTION JOINTS SHALL HAVE CONTINUOUS SHEAR KEYS CONSTRUCTED IN ACCORDANCE WITH THE SHEAR KEY DETAIL

NOTE:
Within ALDOT Right–of–way, 30" Curb & Gutter shall be utilized per ALDOT 623XY. Taper down to 24" Curb & Gutter outside ALDOT Right–of–way over a minimum of 10'.

Construction joints may be formed by 1/8" metal plates removed after finishing or by cutting slab at 25 foot O.C. MAX. to 1/3 of full depth. Round all edges with 1/4 inch radius groove finishing tool.

1/2" Premolded Expansion Joint (Bituminous) Use next to buildings, structures and curbs spacing at 75 foot O.C. Max. All edges and joints to be rounded to 1/4 inch rad.

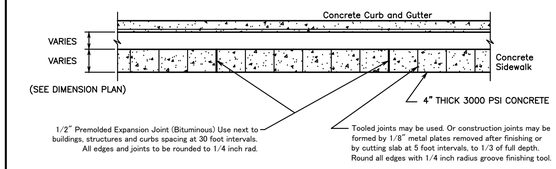

3 / C8.1 STANDARD CONCRETE SIDEWALK
NOT TO SCALE

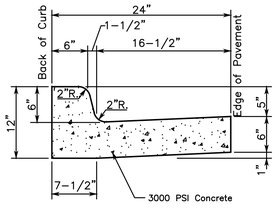

5 / C8.1 24" STANDARD CURB AND GUTTER
NOT TO SCALE

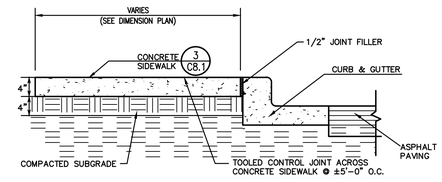

4 / C8.1 TYPICAL SIDEWALK AT CURB & GUTTER
NOT TO SCALE

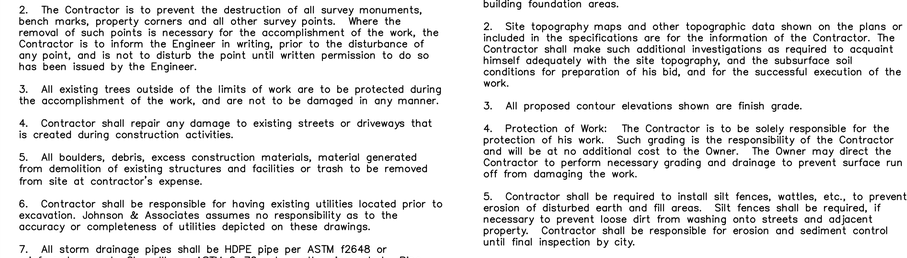

TOP 6" OF SUBGRADE TO BE COMPACTED TO 100% STANDARD DENSITY. BELOW 6" TO BE COMPACTED TO 95% PROCTOR DENSITY AS DETERMINED BY AASHTO T–99 COMPACTION TEST. SEE SPECIFICATIONS FOR ADDITIONAL INFORMATION.

CONSTRUCTION JOINTS MAY BE FORMED BY 1/8" METAL PLATES REMOVED AFTER FINISHING OR BY CUTTING SLAB @ 10' O.C. MAX. TO 1/3 OF FULL DEPTH. ROUND ALL EDGES WITH 1/4" RAD. FINISHING TOOL.

1 / C8.1 HEAVY–DUTY CONCRETE PAVEMENT SECTION
NOT TO SCALE

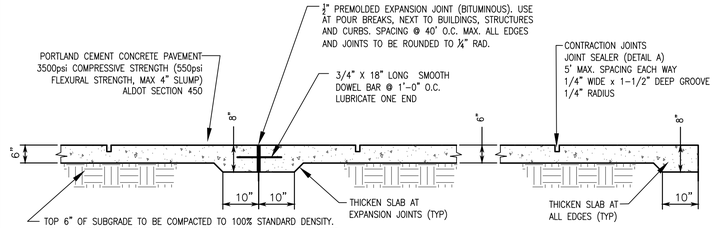

2 / C8.1 LIGHT–DUTY CONCRETE PAVEMENT SECTION
NOT TO SCALE

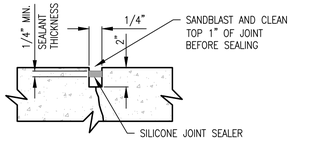

CONCRETE PAVEMENT SECTION
NOT TO SCALE

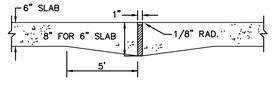

EXPANSION JOINT

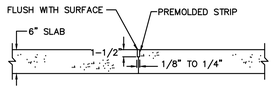

SAWED OR PREMOLDED STRIP

TYPE "C"
NOT TO SCALE

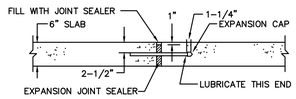

ALTERNATE EXPANSION JOINT

TYPE "A"
NOT TO SCALE

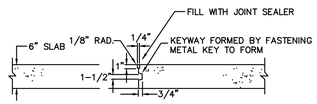

LONGITUDINAL CONSTRUCTION JOINT

TYPE "B"
NOT TO SCALE

Construction joints may be formed by 1/8" metal plates removed after finishing or by cutting slab at 25 foot O.C. MAX. to 1/3 of full depth. Round all edges with 1/4 inch radius groove finishing tool.

1/2" Premolded Expansion Joint (Bituminous) Use next to buildings, structures and curbs spacing at 75 foot O.C. Max. All edges and joints to be rounded to 1/4 inch rad.

NOTE: Transition from Standard to Spill Curb over 10' – Typical

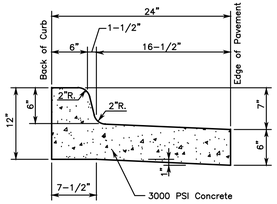

6 / C8.1 24" SPILL CURB AND GUTTER
NOT TO SCALE

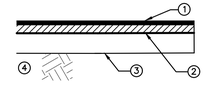

4 TOP 12" OF SUBGRADE TO BE COMPACTED TO 100% OF THE STANDARD PROCTOR MAXIMUM DRY DENSITY (SEE GEOTECHNICAL ENGINEER'S SPECIFICATIONS FOR ADDITIONAL INFORMATION & REQUIREMENTS).

IN AREAS WHERE ALLUVIUM AND OLD FILL ARE EXPOSED AT FINISHED SUBGRADE IT WILL NEED TO BE UNDERCUT TO STIFF RESIDUAL SOIL AND REPLACED WITH PROPERLY COMPACTED SELECT SOIL FILL OR #2 STONE. (SEE GEOTECHNICAL ENGR.'S RECOMMENDATIONS IN SOILS REPORT.)

ALL FINAL SOIL SUBGRADE MATERIAL REQUIRED FOR STRUCTURAL FILL SHOULD BE EVALUATED BY THE GEOTECHNICAL ENGINEER OF RECORD. PROOFROLLING OR OTHER TESTING METHODS WILL BE CONDUCTED IN ACCORDANCE WITH HUNTSVILLE CITY STANDARDS FOR PUBLIC PROJECTS.

NOTE: PAVEMENT BUILD–UP RECOMMENDATIONS AND SOIL SUBGRADE REQUIREMENTS SHOWN IN THE GEOTECHNICAL ENGINEER'S REPORT SHALL TAKE PRECEDENCE OVER THESE PAVEMENT SPECIFICATIONS.

NOTE: SEE ALDOT PLAN SPECIFICATIONS FOR ALL PAVEMENT SURFACES WITHIN THE STATE R.O.W.

HEAVY DUTY

1. ASPHALT SURFACE COURSE (1.5") (HOT MIX) ALDOT No. 424A, 1/2" MAX. AGG. SIZE, ESAL RANGE A/B
2. ASPHALT BINDER COURSE (2") ALDOT No. 424B 1" MAX. AGG. SIZE, ESAL RANGE A/B
3. STONE BASE COURSE (8") ALDOT No. 825B (COMPACTED TO 100% STANDARD PROCTOR AS PER AASHTO T–99)

LIGHT DUTY

1. ASPHALT SURFACE COURSE (1") (HOT MIX) ALDOT No. 424A, 1/2" MAX. AGG. SIZE, ESAL RANGE A/B
2. ASPHALT BINDER COURSE (2") ALDOT No. 424B 1" MAX. AGG. SIZE, ESAL RANGE A/B
3. STONE BASE COURSE (5") ALDOT No. 825B (COMPACTED TO 100% STANDARD PROCTOR AS PER AASHTO T–99)

7 / C8.1 ASPHALT PAVEMENT SECTION
NOT TO SCALE

JOHNSON & ASSOCIATES
ENGINEERING SURVEYING
1218 CHURCH STREET
HUNTSVILLE, ALABAMA 35801
1–256–533–7331
FAX 1–256–533–7332

REVISIONS

no	date	description

STATE OF ALABAMA
NO. 10165
PROFESSIONAL ENGINEER
STEPHEN L. WALKER
02/14/2022
SEAL

PHASE II - ROAD IMPROVEMENTS, PARKING
LOT REPAIRS
ALABAMA A&M UNIVERSITY

Charles Williams & Associates, Inc ARCHITECTS
3601 8TH AVE. SOUTH
BIRMINGHAM, ALABAMA 35222
PH: 205-250-0700
FAX: 205-250-0515

SHEET TITLE:	CONSTRUCTION DETAILS
PROJECT NUMBER:	CWA 2019-06B JA 1791EN
DATE:	02-14-2022
DRAWN BY:	ATC/RDH
CHECKED BY:	SW/ATC

SHEET NUMBER
C8.1

REFERENCE PROJECT NO	FISCAL YEAR	SHEET NO

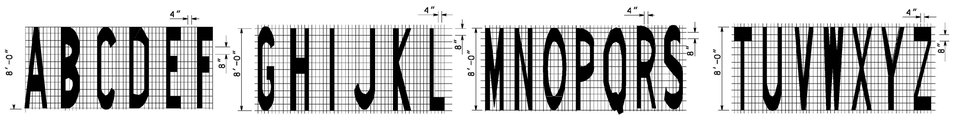

A	B	C	D	E	F	G	H	I	J	K	L	M	N	O	P	Q	R	S	T	U	V	W	X	Y	Z	AREA
5.86	9.88	5.56	7.30	6.22	4.89	6.65	6.44	2.67	4.22	5.25	4.22	8.75	7.56	6.50	6.00	7.33	7.07	7.02	4.44	6.00	4.77	7.75	5.26	4.13	6.25	SQ FT

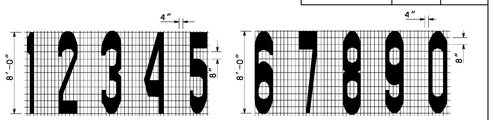

AREA	1	2	3	4	5	6	7	8	9	0
SQ FT	2.98	6.11	6.78	6.11	8.00	8.56	4.89	8.89	8.56	6.89

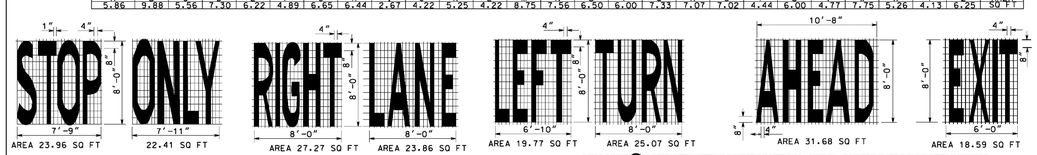

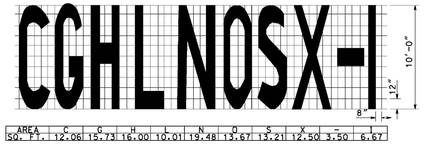

AREA	C	G	H	L	N	O	S	X	-	I
SQ. FT.	12.06	15.73	16.00	10.01	19.48	13.67	13.21	12.50	3.50	6.67

SCHOOL PAVEMENT LEGENDS FOR TWO LANE TRAFFIC

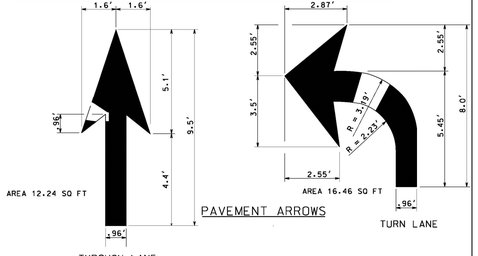

PAVEMENT ARROWS

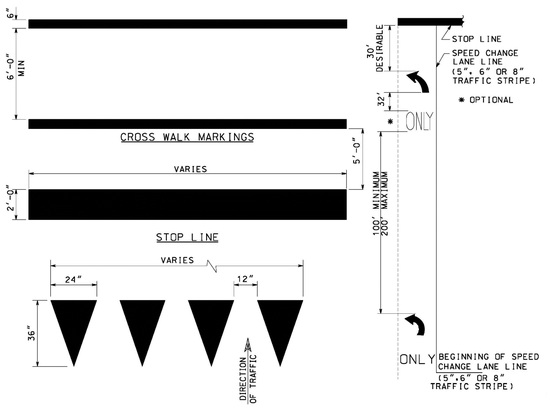

AREA = APP 3.00 SQ FT PER TRIANGLE

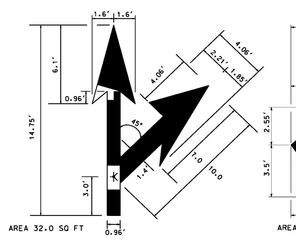

OPTIONAL EXIT LANE

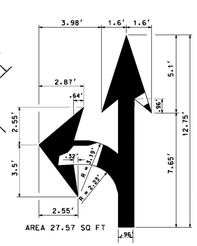

OPTIONAL TURN LANE

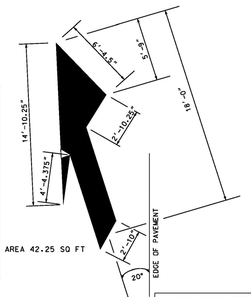

LANE REDUCTION

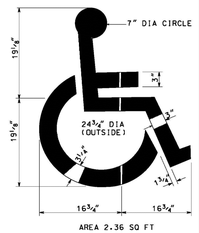

HANDICAP PVMT MARKING SYMBOL

DETAILS FOR TURN LANE MARKINGS & LEGENDS

GENERAL NOTES

1. ALL LEGENDS AND MARKINGS SHALL CONFORM TO THE MUTCD.
2. THE AREA SHOWN FOR MARKINGS AND LEGENDS ARE APPROXIMATE AND ARE PROVIDED FOR ESTIMATING PURPOSES ONLY.
3. THE FIRST TURN LANE LEGEND SHALL BE LOCATED ADJACENT TO THE BEGINNING OF THE SPEED CHANGE LANE LINE.
4. ALL LEGENDS AND MARKINGS SHALL BE WHITE IN COLOR.
5. ALL LETTERS OF THE ALPHABET AND NUMERALS SHALL BE CLASSIFIED AS LEGENDS. ALL OTHERS AS MARKINGS.

--SPECIFICATIONS--

CURRENT ALABAMA DEPARTMENT OF TRANSPORTATION

THIS DRAWING REPRESENTS DESIGNS PREPARED FOR USE BY THE ALABAMA DEPARTMENT OF TRANSPORTATION AND IS NOT TO BE COPIED, REPRODUCED, ALTERED, OR USED BY ANYONE, OR ANY ORGANIZATION, WITHOUT THE EXPRESSED WRITTEN CONSENT OF THE ALABAMA DEPARTMENT OF TRANSPORTATION REPRESENTATIVE AUTHORIZED TO APPROVE THIS USE. ANYONE MAKING UNAUTHORIZED USE OF THIS DRAWING MAY BE PROSECUTED TO THE FULLEST EXTENT OF THE LAW.

REVISIONS
1. Added Yield Line and changed width of ONLY to 7'-1/2-12-97 by C.J.S.
2. Changed Channelizing Line to Channelizing Stripe 6" or 8" Traffic Stripe on 09-20-00 by J.F.J.
3. Changed Channelizing Stripe to 5",6" or 8" Traffic Stripe on 07-12-07 by W.M.A.
4. Changed Channelizing Line to Speed Change Lane Line 08-08-07 by W.M.A.
5. Added Lane Reduction,Optional Turn Lane & Optional Exit Lane Arrows and Exit Legend on 08-05-08 by W.M.A.

ALABAMA DEPARTMENT OF TRANSPORTATION
1409 COLISEUM BOULEVARD
MONTGOMERY, AL 36130-3050

DESIGN BUREAU SPECIAL DRAWING

PAVEMENT LEGENDS AND MARKINGS DETAILS

Bureau Shd Engrg L.V.S. DRAWN BY: DATE DRAWN 11-06-91

SPECIAL DRAWING NO: TCM-703 (SHEET 2 OF 2)

INDEX NO: 1049

NOT TO SCALE

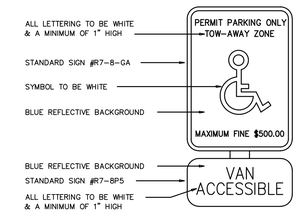

1. ALL SIGNS TO BE 0.080" THICK ALUMINUM
2. ALL SIGNS SHALL CONFORM WITH ALL CURRENT A.D.A. FEDERAL, STATE AND LOCAL CODES AND REGULATIONS.
3. PLACE "VAN ACCESSIBLE" SIGN IN FRONT OF VAN ACCESSIBLE SPACES ONLY.

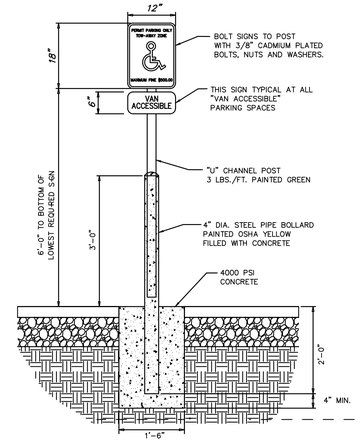

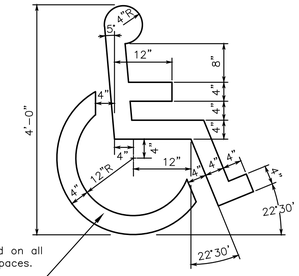

Symbol to be painted on all handicap parking spaces.

STANDARD BLUE TRAFFIC PAINT

VAN

12"

Van letters only in spaces as designated on Dimension Plan.

2 C8.2 HANDICAP PARKING SIGN & PAINTED SYMBOL
NOT TO SCALE
ONE AT EACH HANDICAP SPACE.
WHERE HANDICAP SPACES FACE EACH OTHER WITHOUT WALKWAY, THERE SHALL BE ONE POST WITH SIGNS MOUNTED BOTH SIDES

1 C8.2 TRAFFIC STRIPING AND PARKING STRIPING
NOT TO SCALE

NOTE:
1) SEE DIMENSION PLAN FOR PARKING DIMENSIONS & LAYOUT.

2) USE BLUE TRAFFIC PAINT FOR ALL HANDICAP STRIPING, SYMBOLS, ETC.

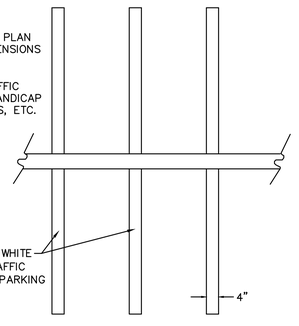

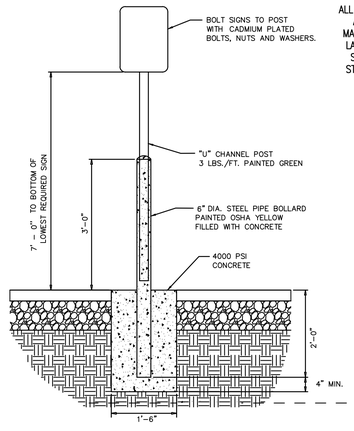

ALL TRAFFIC CONTROL DEVICES SHALL BE ERECTED AND MAINTAINED IN CONFORMANCE WITH THE MANUAL ON UNIFORM TRAFFIC CONTROL DEVICES, LATEST EDITION, AND IN ACCORDANCE WITH THE SPECIFICATIONS FOR TRAFFIC CONTROL SIGNS, STREET MARKER BLADES, SIGNPOSTS, MOUNTING BRACKETS AND INSTALLATION.

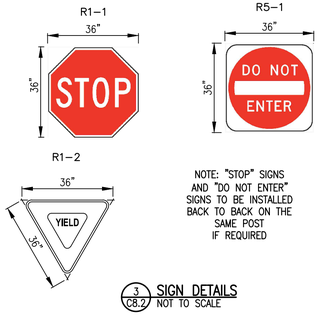

NOTE: "STOP" SIGNS AND "DO NOT ENTER" SIGNS TO BE INSTALLED BACK TO BACK ON THE SAME POST IF REQUIRED

3 C8.2 SIGN DETAILS
NOT TO SCALE

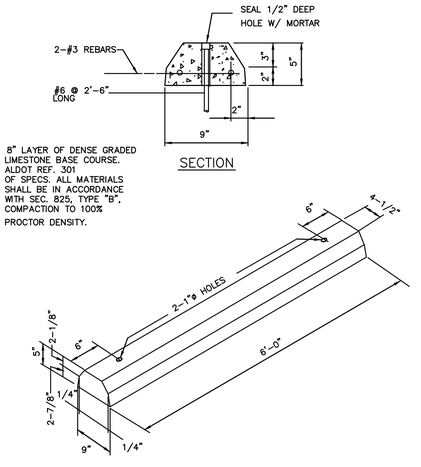

4 C8.2 CONCRETE CURB-STOP
NOT TO SCALE

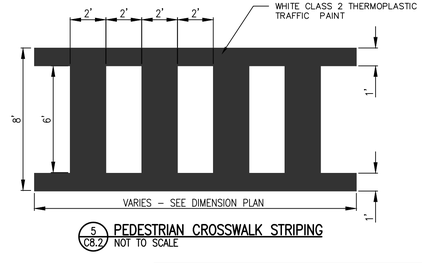

5 C8.2 PEDESTRIAN CROSSWALK STRIPING
NOT TO SCALE

JOHNSON & ASSOCIATES
ENGINEERING SURVEYING
1218 CHURCH STREET
HUNTSVILLE, ALABAMA 35801
1-256-533-7331
FAX 1-256-533-7332

REVISIONS		
no.	date	description

ALABAMA
JAMES STEPHEN WALKER
NO. 16165
PROFESSIONAL
ENGINEER
STEPHEN L. WALKER
02/14/2022
SEAL

PHASE II - ROAD IMPROVEMENTS, PARKING LOT REPAIRS
ALABAMA A&M UNIVERSITY

Charles Williams & Associates, Inc
ARCHITECTS
3601 8TH AVE. SOUTH
BIRMINGHAM, ALABAMA 35222
PH: 205-250-0700
FAX: 205-250-0515

SHEET TITLE:	CONSTRUCTION DETAILS
PROJECT NUMBER:	CWA 2019-06B JA 1791EN
DATE:	02-14-2022
DRAWN BY:	ATC/RDH
CHECKED BY:	SW/ATC

SHEET NUMBER
C8.2

REFERENCE PROJECT NO	FISCAL YEAR	SHEET NO

DETAIL CALL-OUTS: ⚠14

1. RAMPS
   - 15'-0" MAX LENGTH
   - 8.3% (12:1) MAX RUNNING SLOPE
   - 5.0% (20:1) MIN RUNNING SLOPE
   - 2.0% (50:1) MAX CROSS SLOPE
2. FLARES
   - 10.0% (10:1) MAX RUNNING SLOPE
3. LANDING (TURNING SPACE)
   - 2.0% (50:1) MAX RUNNING SLOPE
   - 2.0% (50:1) MAX CROSS SLOPE
4. BLENDED TRANSITIONS
   - 5.0% (20:1) MAX RUNNING SLOPE
5. SIDEWALKS
   - 5.0% (20:1) MAX RUNNING SLOPE ⚠9
   - 2.0% (50:1) MAX CROSS SLOPE
6. DRIVEWAYS
   - 8.0% (12.5:1) MAX CHANGE IN GRADE BETWEEN ROAD SURFACES AND DRIVEWAY
   - 8.0% (12.5:1) MAX CHANGE IN GRADE BETWEEN DRIVEWAY AND SIDEWALK

GENERAL NOTES FOR CURB RAMPS AND SIDEWALKS:

1. WHERE THE TURNING SPACE IS CONSTRAINED AT THE BACK-OF-SIDEWALK SUCH AS, A BUILDING ADJACENT TO THE SIDEWALK, THE TURNING SPACE SHALL BE 4'-0" MIN BY 5'-0" MIN. THE 5'-0" DIMENSION SHALL BE PROVIDED IN THE DIRECTION OF THE RAMP RUN.
2. SIDEWALK, RAMP, AND CURB RAMP SURFACES SHALL BE NON-SKID PREPARED BY BRUSHING.
3. 2% (50:1) OR LESS IS CONSIDERED FLAT.
4. ⚠ INSTALL EXPANSION JOINT MATERIAL WHERE NEW CONSTRUCTION MEETS EXISTING SIDEWALKS, CURBS, GUTTERS, OR FOUNDATIONS. THE CONSTRUCTION JOINT MATERIAL SHALL MEET THE REQUIREMENT OF SECTION 832.01 AND SEALED IN ACCORDANCE WITH SECTION 832.02.
5. THE SUBGRADE SHALL BE FREE OF ALL ROOTS AND OTHER UNDESIRABLE MATERAILS WITH THE ROOTS CUT BACK ONE (1) FOOT FROM FACE OF SIDEWALK.
6. SIDEWALKS, RAMPS, LANDINGS, AND CURB RAMPS SHALL BE FOUR (4) INCHES THICK UNLESS NOTED OTHERWISE.
7. RAMP AND CURB RAMP GRADE(SLOPE IN THE DIRECTION OF PEDESTRIAN TRAVEL) SHALL NOT EXCEED 8.3% (12:1).
8. ⚠ GUTTER COUNTER SLOPE SHALL NOT EXCEED 5.0% (20:1).
9. ⚠ WITHIN THE STREET OR HIGHWAY RIGHT-OF-WAY, THE GRADE OF THE PEDESTRIAN ACCESS ROUTES SHALL NOT EXCEED THE GENERAL GRADE ESTABLISHED FOR THE ADJACENT STREET OR HIGHWAY. WHERE PEDESTRIAN ACCESS ROUTES ARE NOT CONTAINED WITHIN A STREET OR HIGHWAY RIGHT-OF-WAY, THEY SHALL HAVE A MAXIMUM SLOPE OF 20:1 (5.0%).
10. ⚠ PROVIDE A TWO (2) FEET MINIMUM TRANSITION STRIP IF ALGEBRAIC DIFFERENCES BETWEEN ROADWAY SLOPE AND CURB RAMP SLOPE ARE GREATER THAN 9:1 (11.0%). TRANSITION STRIP SHALL NOT EXCEED 2.0% (50:1).
11. ⚠ DETECTABLE WARNING SURFACES MUST BE TWO (2) FEET IN LENGTH IN THE DIRECTION OF PEDESTRIAN TRAVEL AND EXTEND THE FULL WIDTH OF THE CURB RAMP. THE DETECTABLE WARNING MATERIAL AND MANUFACTURER SHALL BE FROM THE ALABAMA DEPARTMENT OF TRANSPORTATION LIST OF QUALIFIED MATERIAL, SOURCES, AND DEVICES. THE COLOR SHALL BE BRICK RED OR A COLOR APPROVED BY THE ENGINEER THAT SHALL CONTRAST THE SURROUNDING SURFACES LIGHT-ON-DARK OR DARK-ON-LIGHT.
12. ⚠ VERTICAL SURFACE DISCONTINUITIES SHALL BE 0.50 INCH MAXIMUM. VERTICAL SURFACE DISCONTINUITIES BETWEEN 0.25 AND 0.5. INCH SHALL BE BEVELED WITH A SLOPE NOT GREATER THAN 2:1 (50.0%).
13. ⚠ DOMES SHALL BE PARALLEL TO THE RAMP SO THAT THE WHEELCHAIR WHEELS CAN TRAVEL BETWEEN THE DOMES.
14. ⚠ THESE MAXIMUM SLOPES SHALL NOT BE EXCEEDED.
15. ⚠ TO PREVENT STANDING WATER AT THE BASE OF CURB RAMPS, LOCATE STORM DRAIN INLETS UPSTREAM.

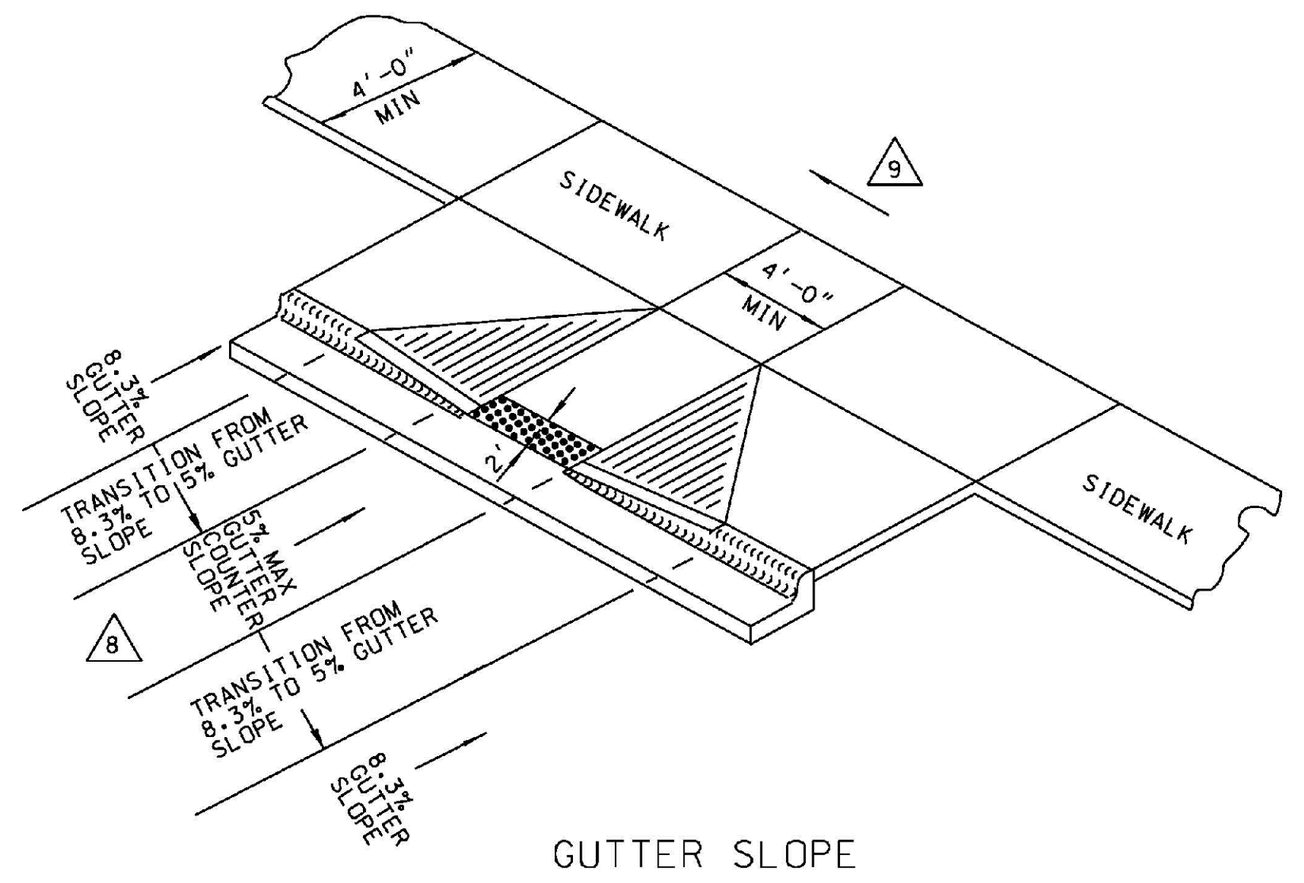

GUTTER SLOPE TRANSITIONS

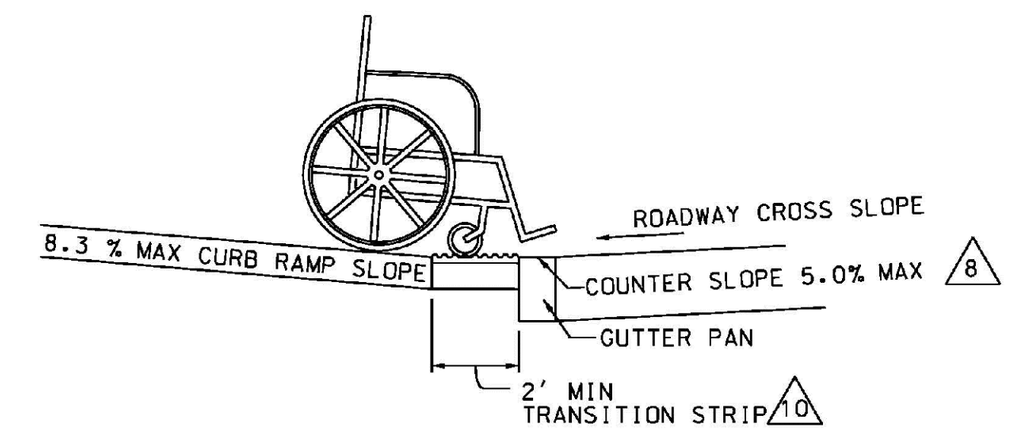

CHANGE OF GRADE LIMITATIONS

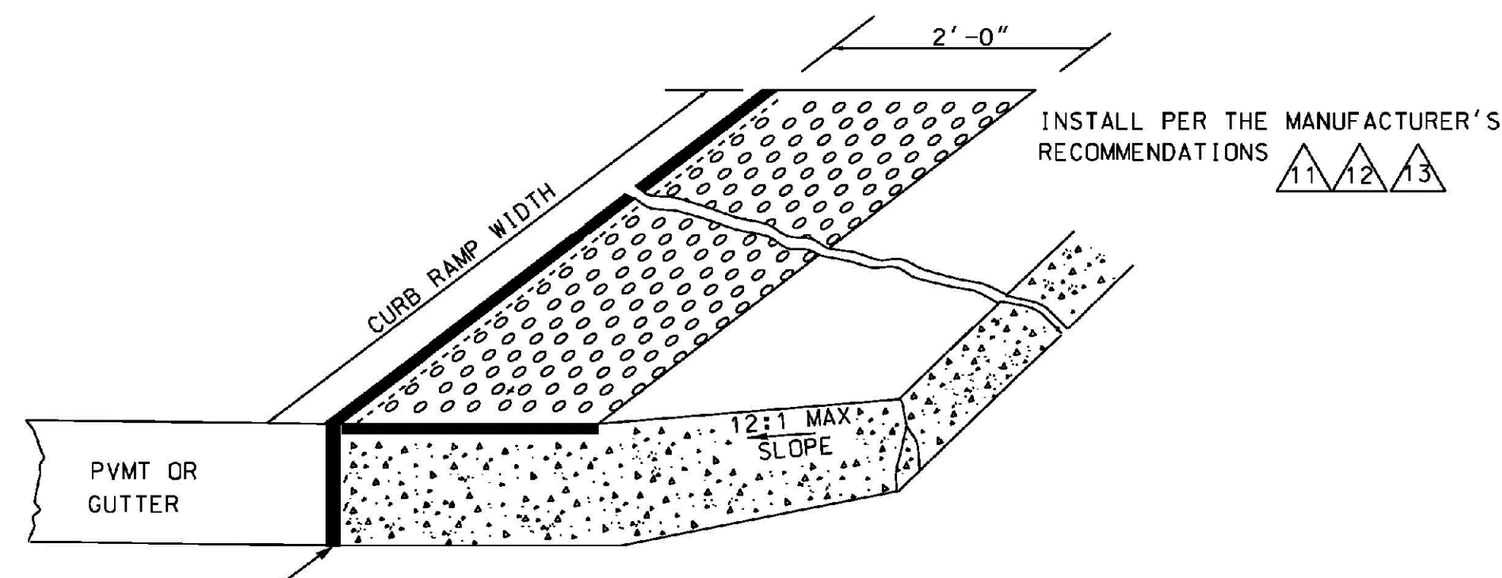

PREFABRICATED MAT OPTION (INLAID)

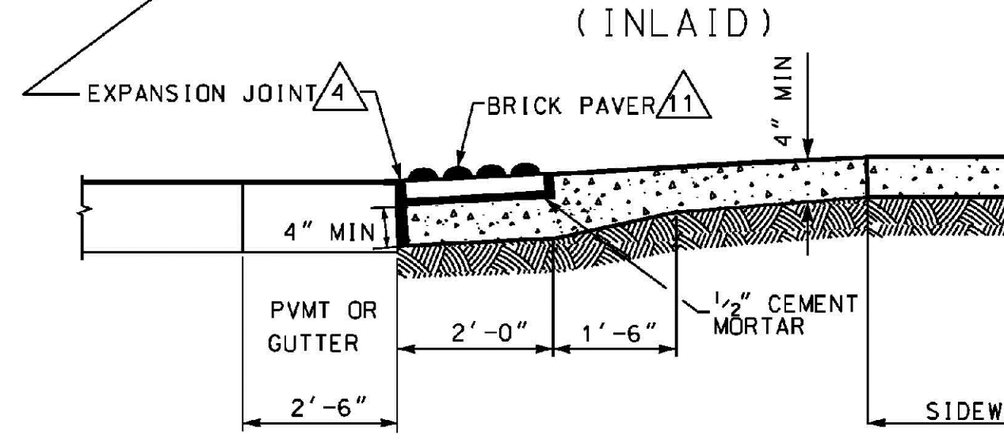

BRICK PAVER OPTION

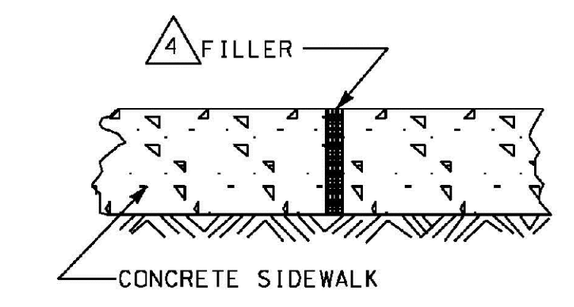

EXPANSION JOINT DETAILS

--SPECIFICATIONS--
CURRENT ALABAMA DEPARTMENT OF TRANSPORTATION

THIS DRAWING REPRESENTS DESIGNS PREPARED FOR USE BY THE ALABAMA DEPARTMENT OF TRANSPORTATION AND IS NOT TO BE COPIED, REPRODUCED, ALTERED, OR USED BY ANYONE, OR ANY ORGANIZATION, WITHOUT THE EXPRESSED WRITTEN CONSENT OF THE ALABAMA DEPARTMENT OF TRANSPORTATION REPRESENTATIVE AUTHORIZED TO APPROVE THIS USE. ANYONE MAKING UNAUTHORIZED USE OF THIS DRAWING MAY BE PROSECUTED TO THE FULLEST EXTENT OF THE LAW.

REVISIONS

ALABAMA DEPARTMENT OF TRANSPORTATION
1409 COLISEUM BOULEVARD
MONTGOMERY, AL 36130-3050

DESIGN BUREAU SPECIAL DRAWING

CURB RAMP DETAIL CALLOUTS, GENERAL NOTES FOR CURB RAMPS AND SIDEWALKS, AND DETAILS

DRAWN BY:
DATE DRAWN:

SPECIAL DRAWING NO. SW-618 (SHEET 1 OF 4) INDEX NO. 734

NOT TO SCALE

REFERENCE PROJECT NO	FISCAL YEAR	SHEET NO

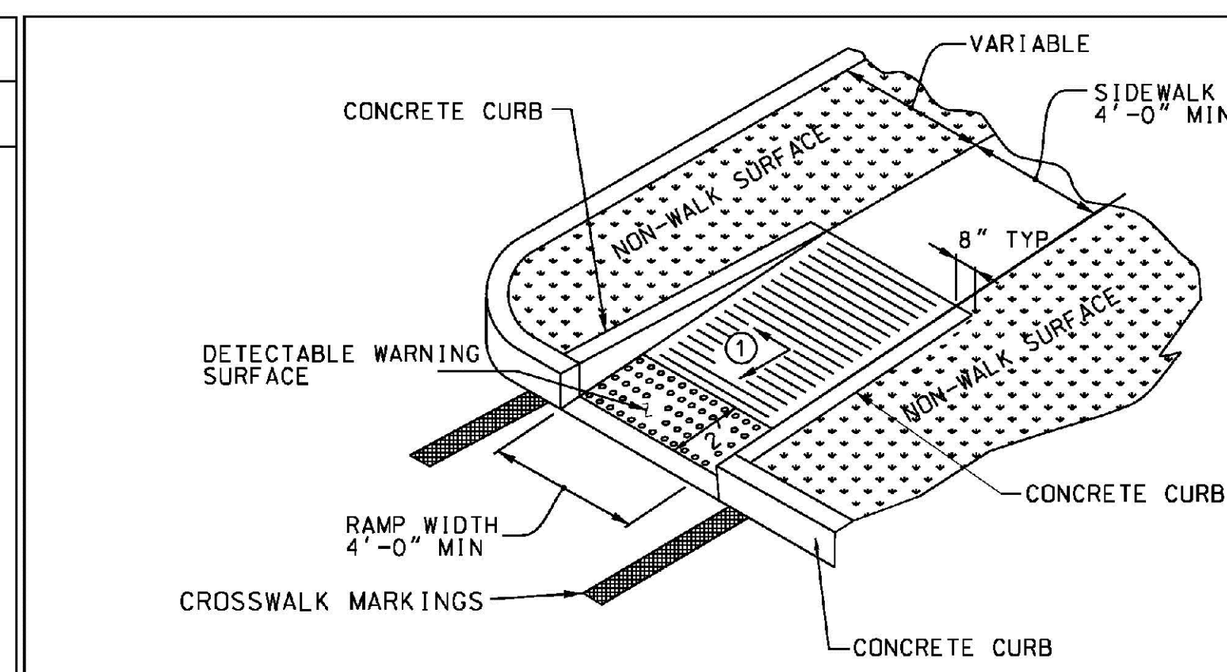

TYPE 1: PARALLEL CORNER

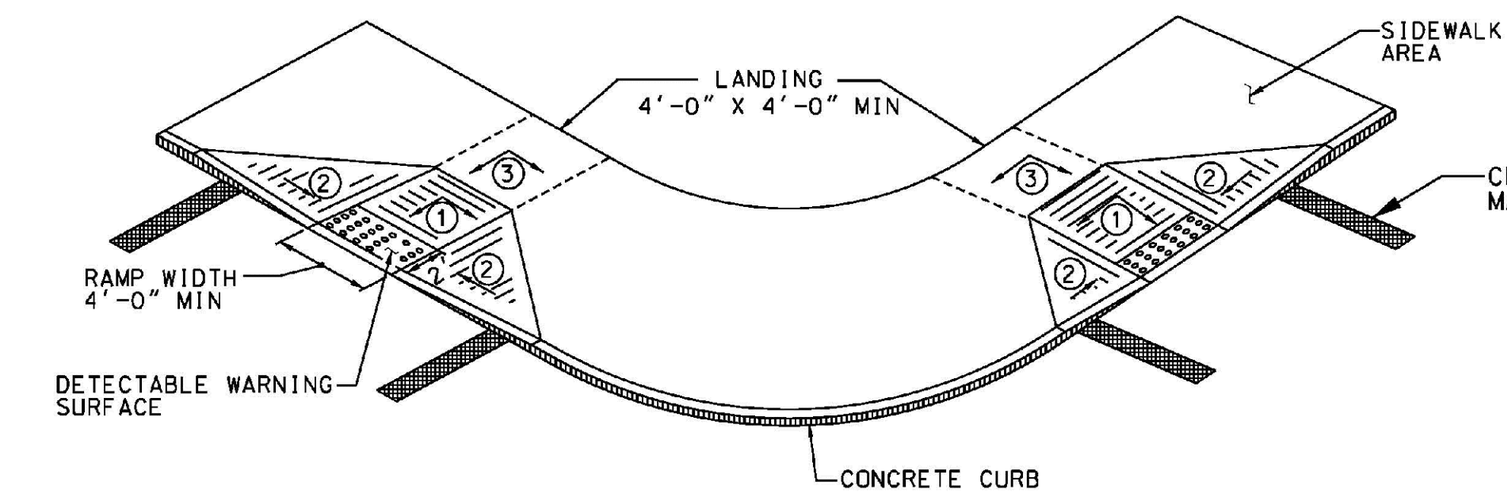

TYPE 3: PERPENDICULAR CORNER

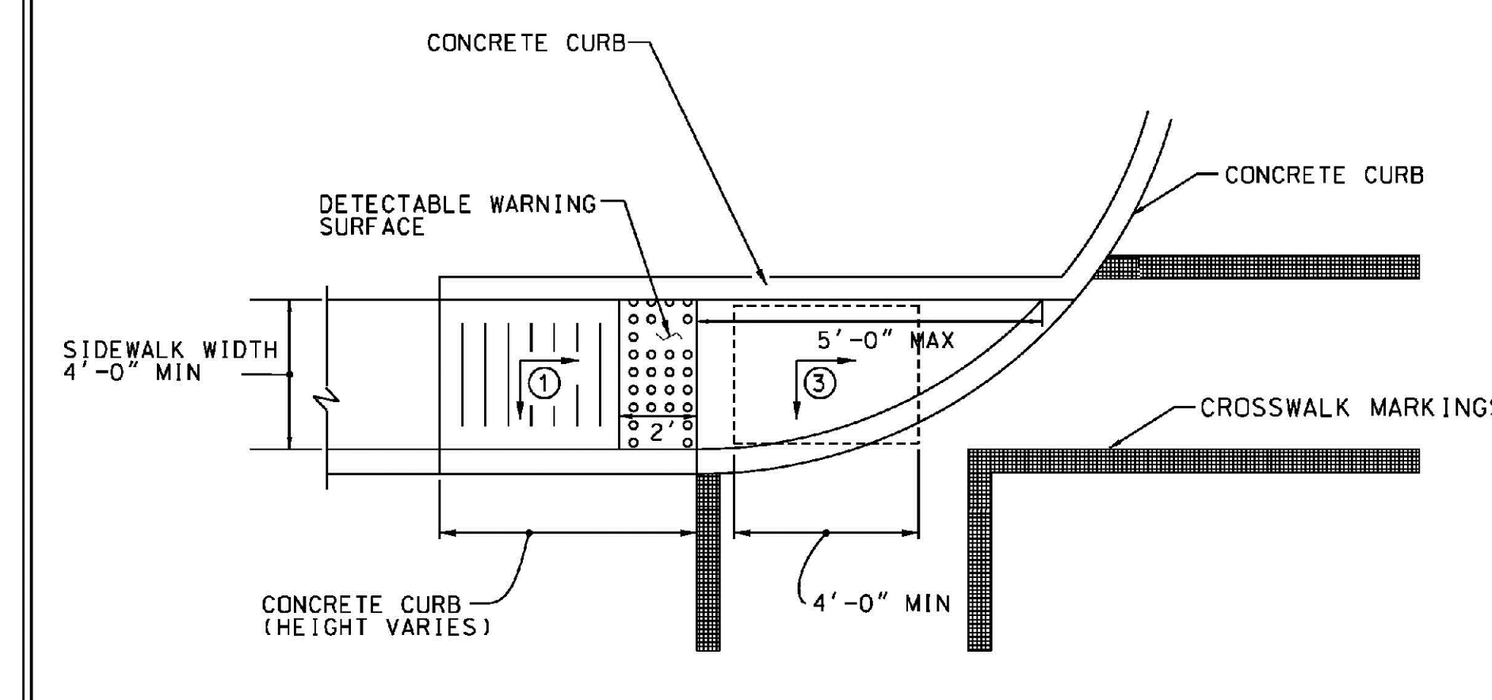

TYPE 1A: PARALLEL CORNER

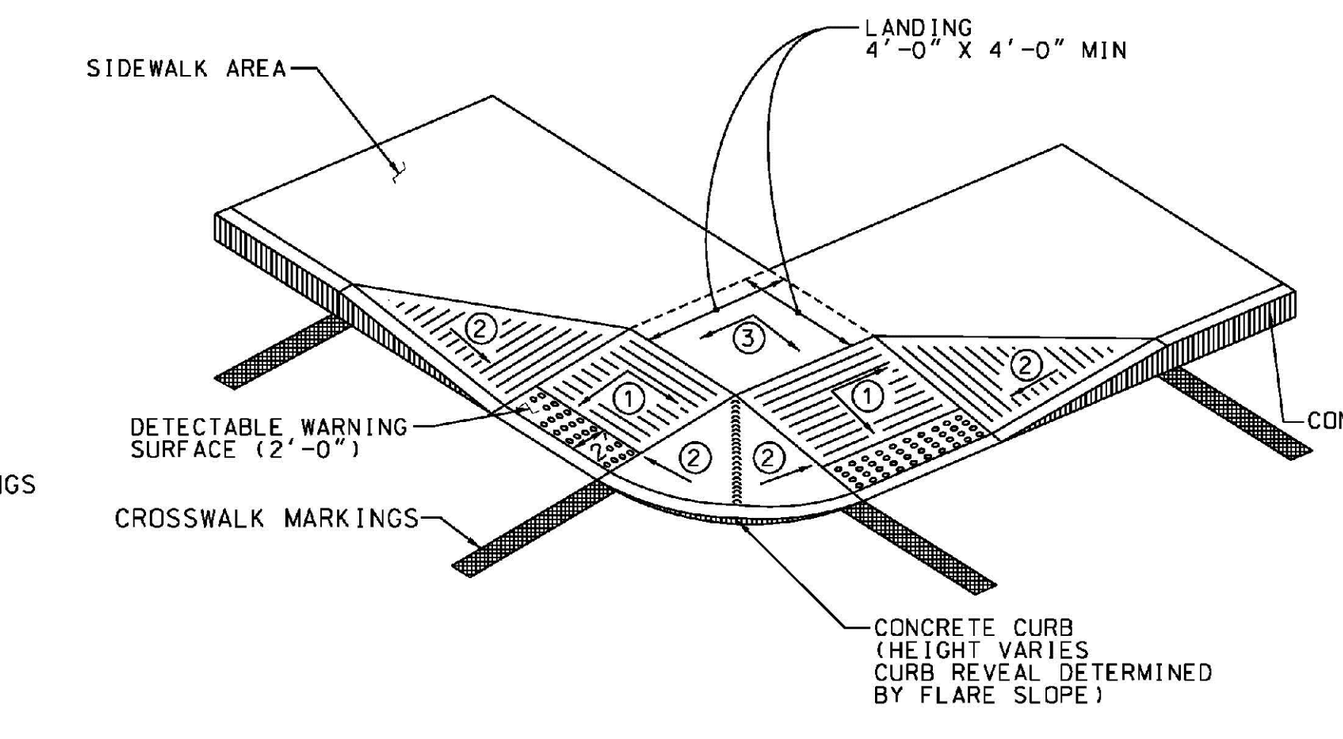

TYPE 3A: PERPENDICULAR CORNER

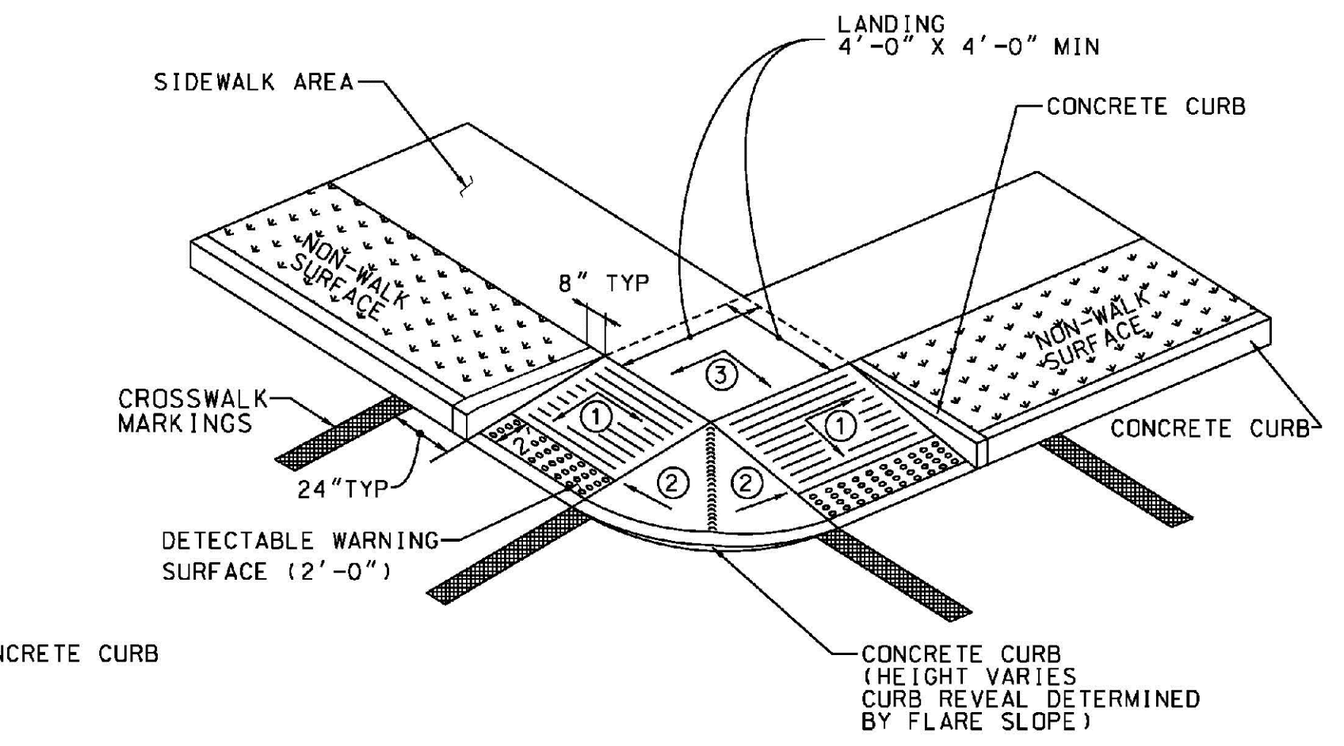

TYPE 3C: PERPENDICULAR CORNER

•SEE SHEET 1 OF 4 FOR DETAIL CALL OUTS ①, ②, ③, ④.
•SEE SHEET 1 OF 4 FOR GENERAL NOTES FOR CURB RAMPS AND SIDEWALKS.

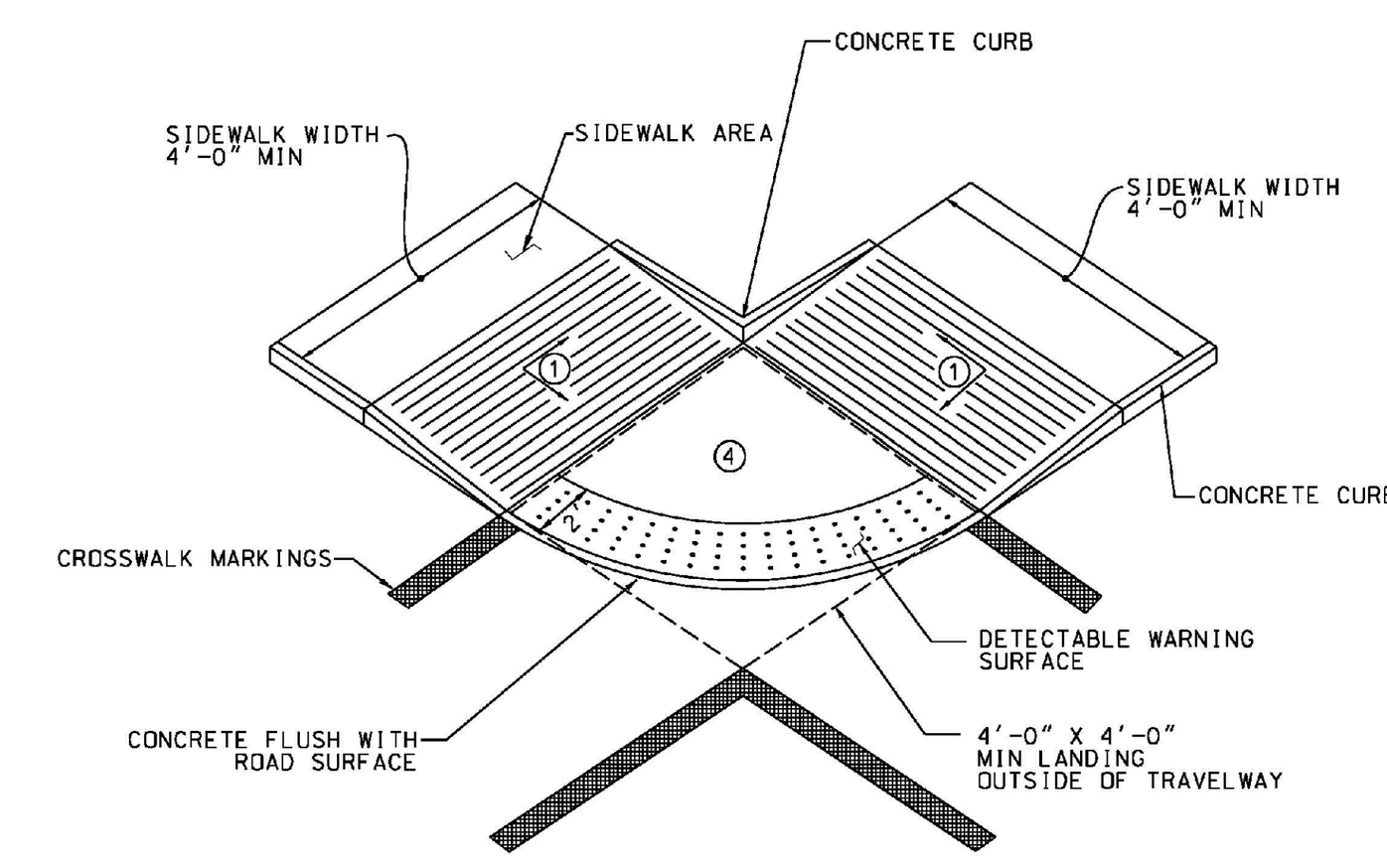

TYPE 2: BLENDED CORNER

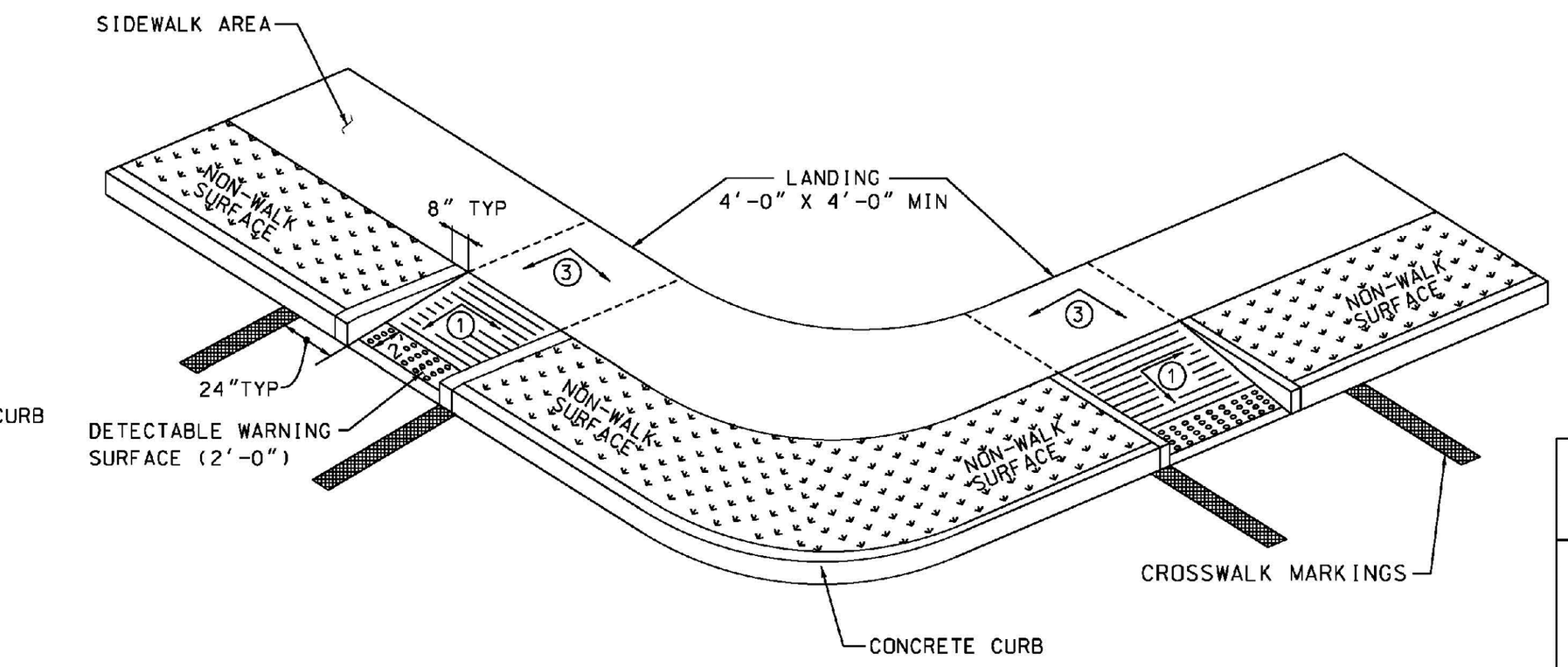

TYPE 3B: PERPENDICULAR CORNER

--SPECIFICATIONS--
CURRENT ALABAMA DEPARTMENT OF TRANSPORTATION

THIS DRAWING REPRESENTS DESIGNS PREPARED FOR USE BY THE ALABAMA DEPARTMENT OF TRANSPORTATION AND IS NOT TO BE COPIED, REPRODUCED, ALTERED, OR USED BY ANYONE, OR ANY ORGANIZATION, WITHOUT THE EXPRESSED WRITTEN CONSENT OF THE ALABAMA DEPARTMENT OF TRANSPORTATION REPRESENTATIVE AUTHORIZED TO APPROVE THIS USE. ANYONE MAKING UNAUTHORIZED USE OF THIS DRAWING MAY BE PROSECUTED TO THE FULLEST EXTENT OF THE LAW.

REVISIONS

ALABAMA DEPARTMENT OF TRANSPORTATION
1409 COLISEUM BOULEVARD
MONTGOMERY, AL 36130-3050

DESIGN BUREAU SPECIAL DRAWING

CORNER CURB RAMPS

DRAWN BY:
DATE DRAWN:

SPECIAL DRAWING NO. SW-618 (SHEET 2 OF 4) INDEX NO. 735

NOT TO SCALE

REFERENCE PROJECT NO	FISCAL YEAR	SHEET NO

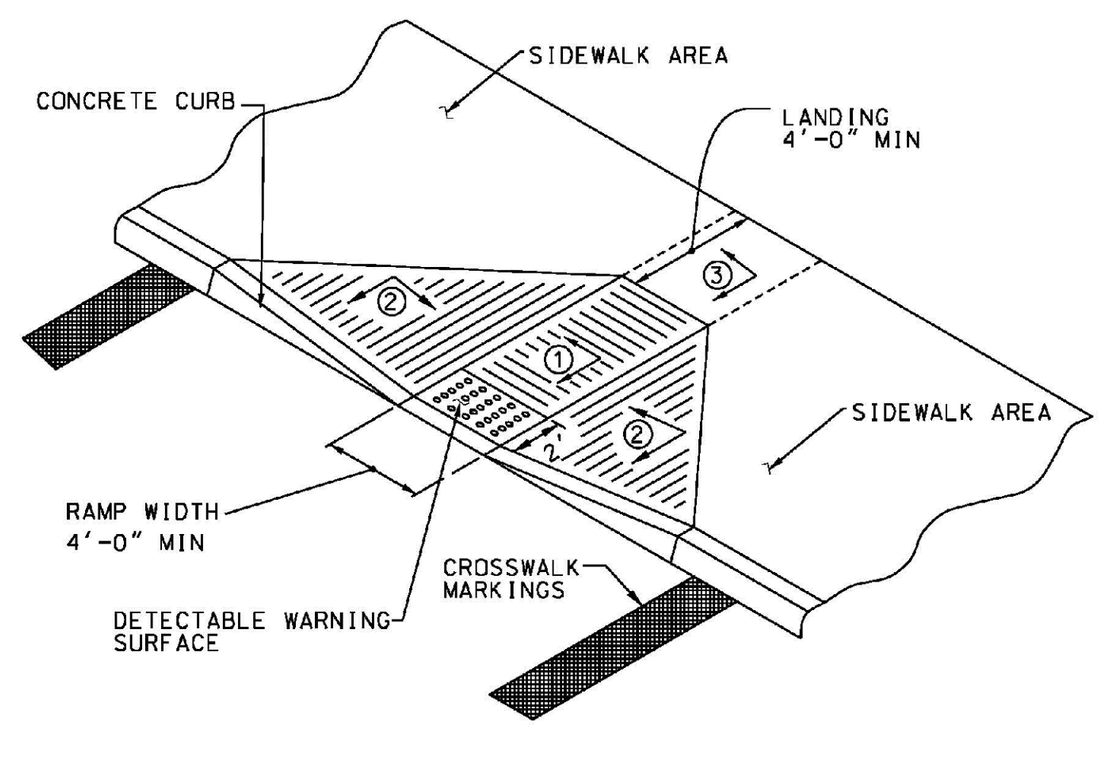

TYPE 1: PERPENDICULAR MIDBLOCK

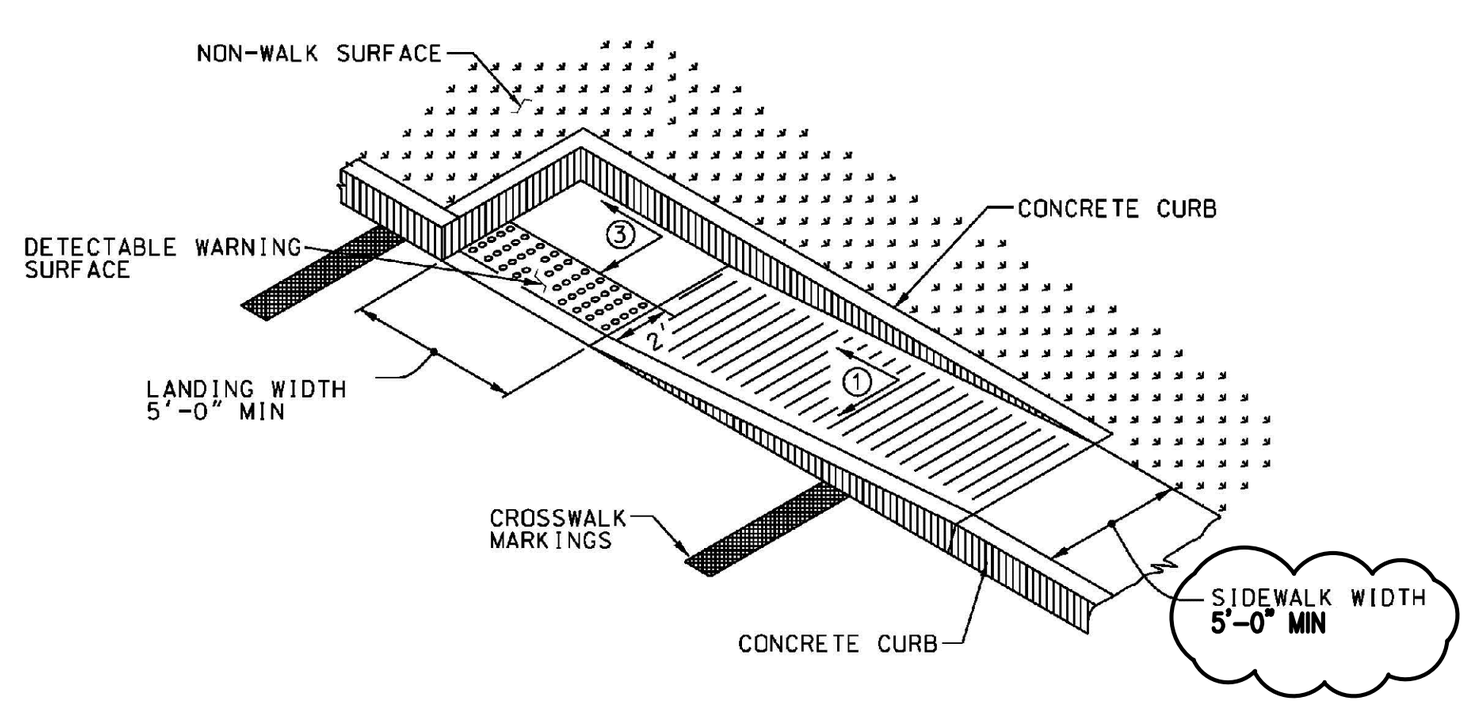

TYPE 2: PARALLEL MIDBLOCK

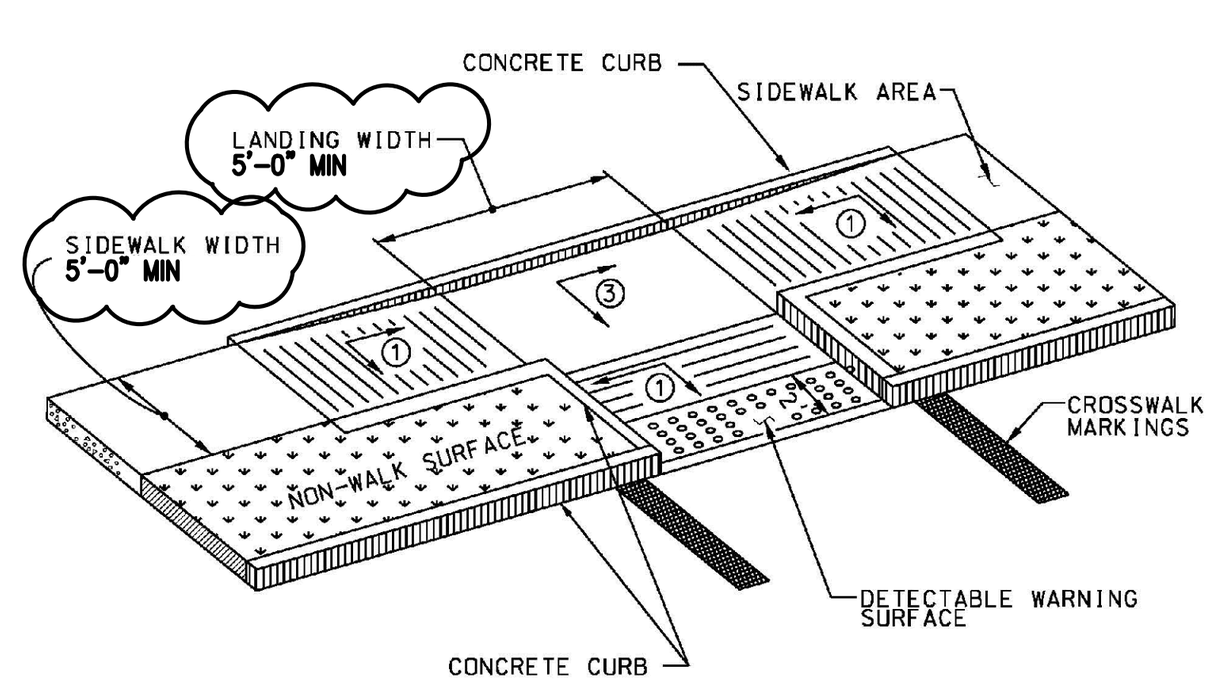

TYPE 3: COMBINATION MIDBLOCK

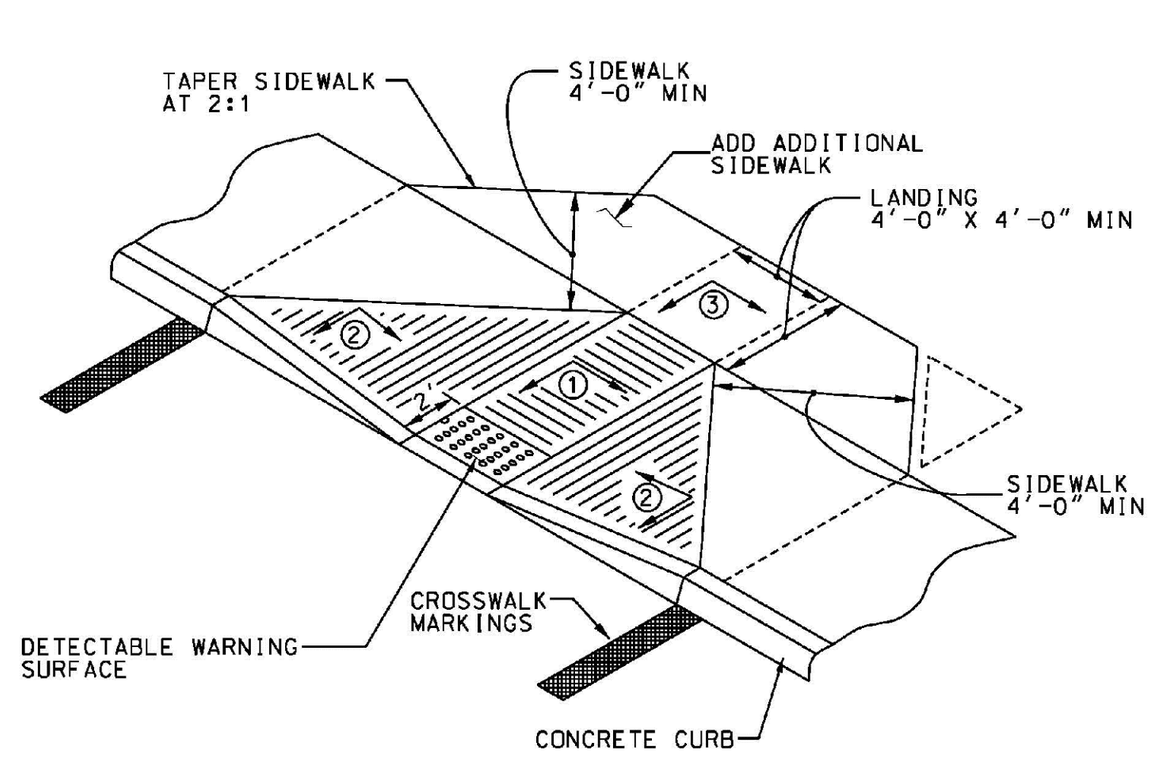

TYPE 1A: PERPENDICULAR MIDBLOCK

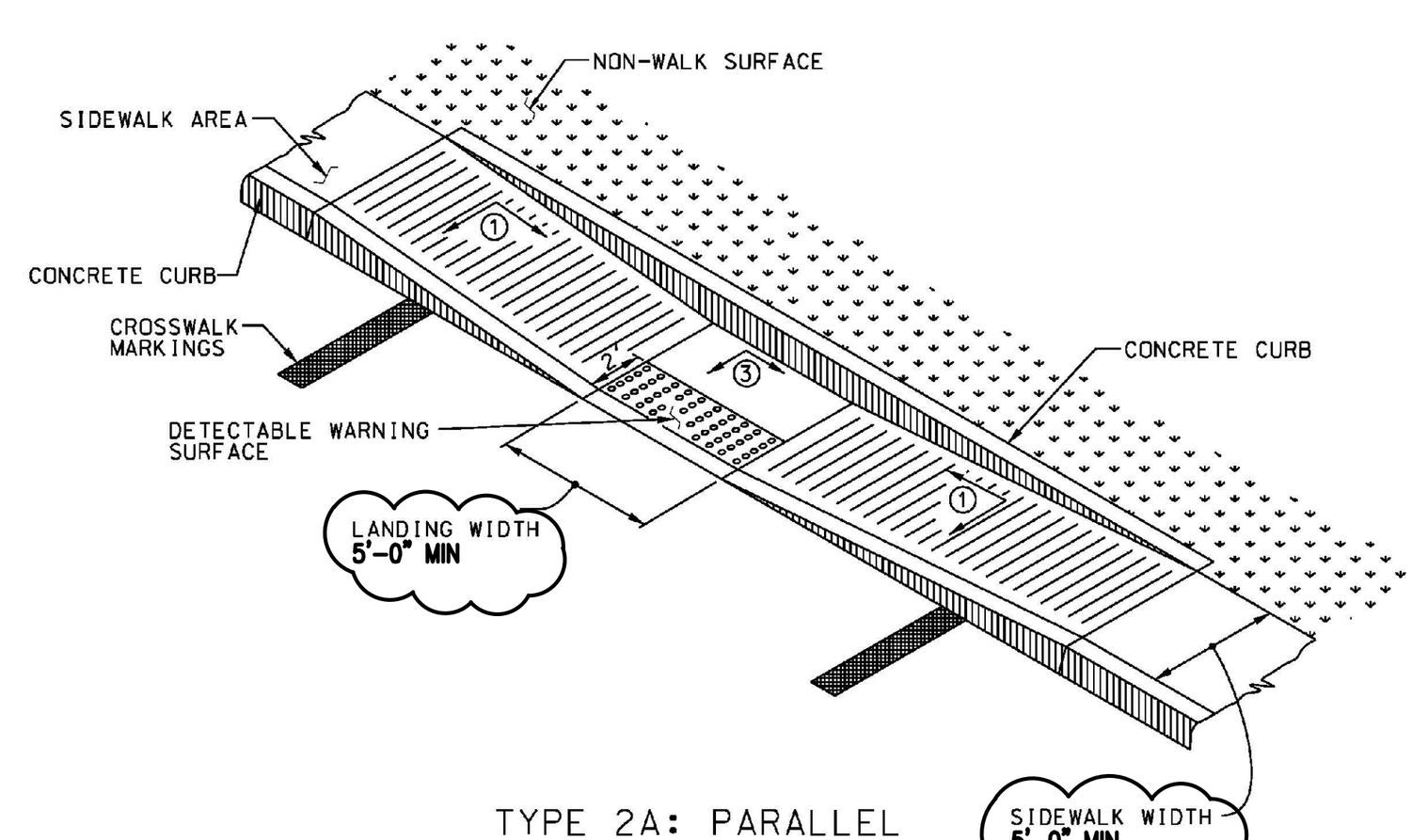

TYPE 2A: PARALLEL MIDBLOCK

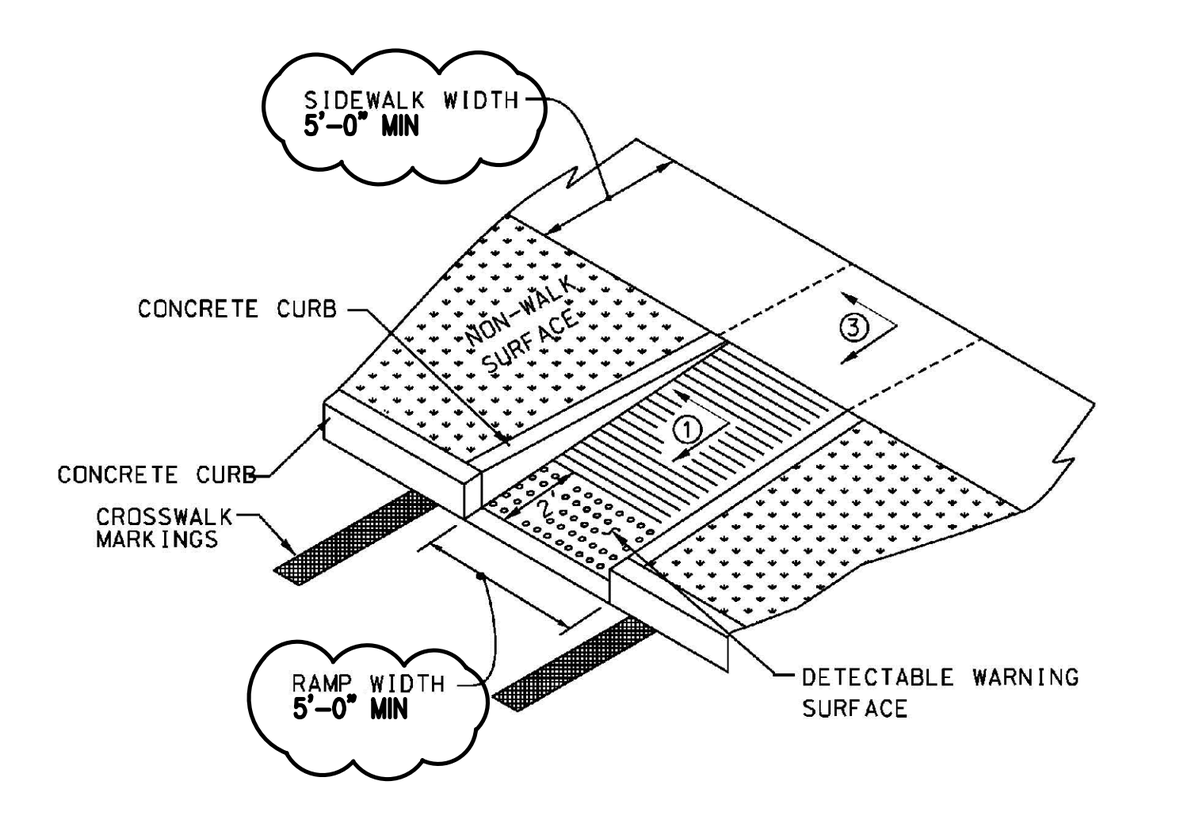

TYPE 4: PERPENDICULAR MIDBLOCK

NOTE:
THIS DETAIL HAS BEEN MODIFIED BY JOHNSON & ASSOCIATES

•SEE SHEET 1 OF 4 FOR DETAIL CALL OUTS ①, ②, ③.
•SEE SHEET 1 OF 4 FOR GENERAL NOTES FOR CURB RAMPS AND SIDEWALKS.

--SPECIFICATIONS--
CURRENT ALABAMA DEPARTMENT OF TRANSPORTATION

THIS DRAWING REPRESENTS DESIGNS PREPARED FOR USE BY THE ALABAMA DEPARTMENT OF TRANSPORTATION AND IS NOT TO BE COPIED, REPRODUCED, ALTERED, OR USED BY ANYONE, OR ANY ORGANIZATION, WITHOUT THE EXPRESSED WRITTEN CONSENT OF THE ALABAMA DEPARTMENT OF TRANSPORTATION REPRESENTATIVE AUTHORIZED TO APPROVE THIS USE. ANYONE MAKING UNAUTHORIZED USE OF THIS DRAWING MAY BE PROSECUTED TO THE FULLEST EXTENT OF THE LAW.

REVISIONS

ALABAMA DEPARTMENT OF TRANSPORTATION
1409 COLISEUM BOULEVARD
MONTGOMERY, AL 36130-3050

DESIGN BUREAU SPECIAL DRAWING

MIDBLOCK CURB RAMPS

DRAWN BY:
DATE DRAWN:

SPECIAL DRAWING NO. SW-618 (SHEET 3 OF 4) INDEX NO. 736

NOT TO SCALE

REFERENCE PROJECT NO	FISCAL YEAR	SHEET NO

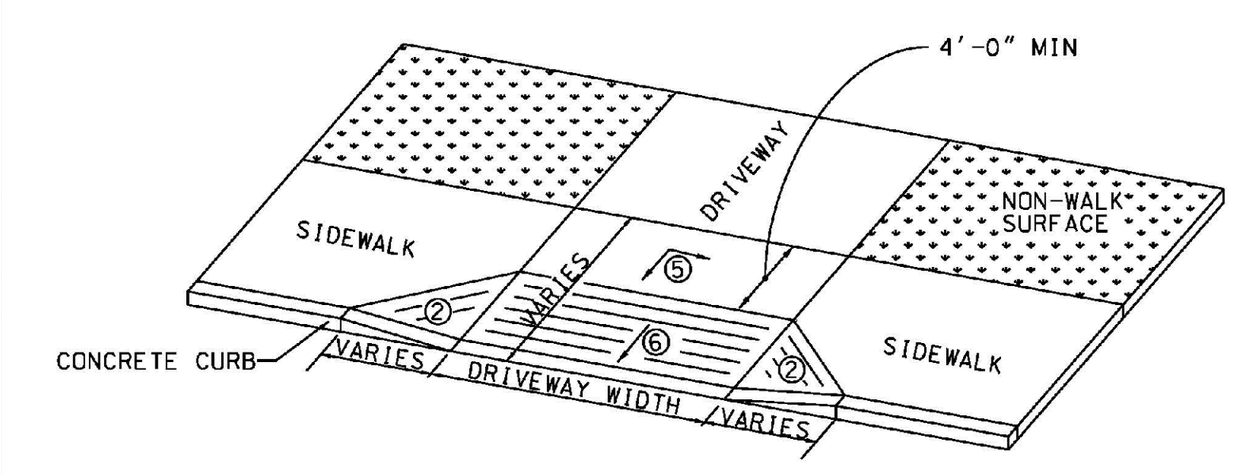

TYPE 1: DRIVEWAY CROSSING
(NOTE: DRIVEWAY AND SIDEWALK SURFACES AT SAME ELEVATION)

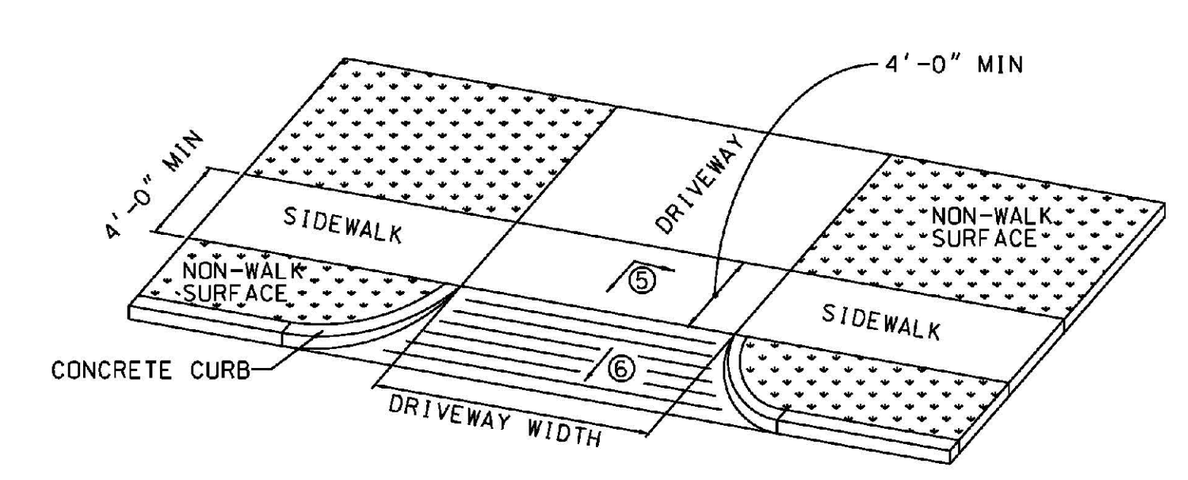

TYPE 2: DRIVEWAY CROSSING
(NOTE: DRIVEWAY AND SIDEWALK SURFACES AT SAME ELEVATION)

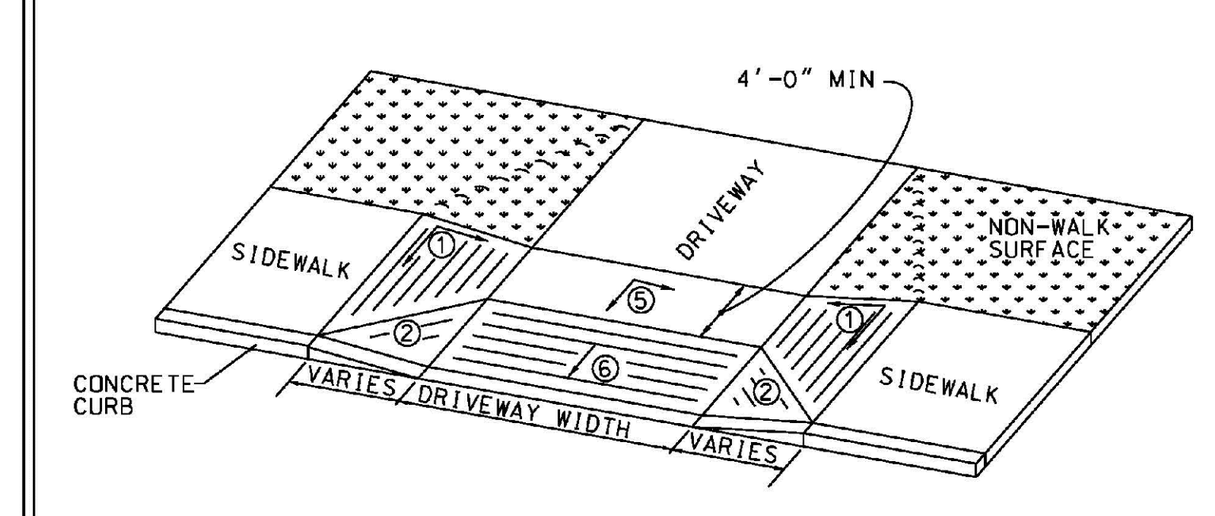

TYPE 3: DRIVEWAY CROSSING
(NOTE: DRIVEWAY SURFACE AT LOWER ELEVATION THAN SIDEWALK SURFACE)

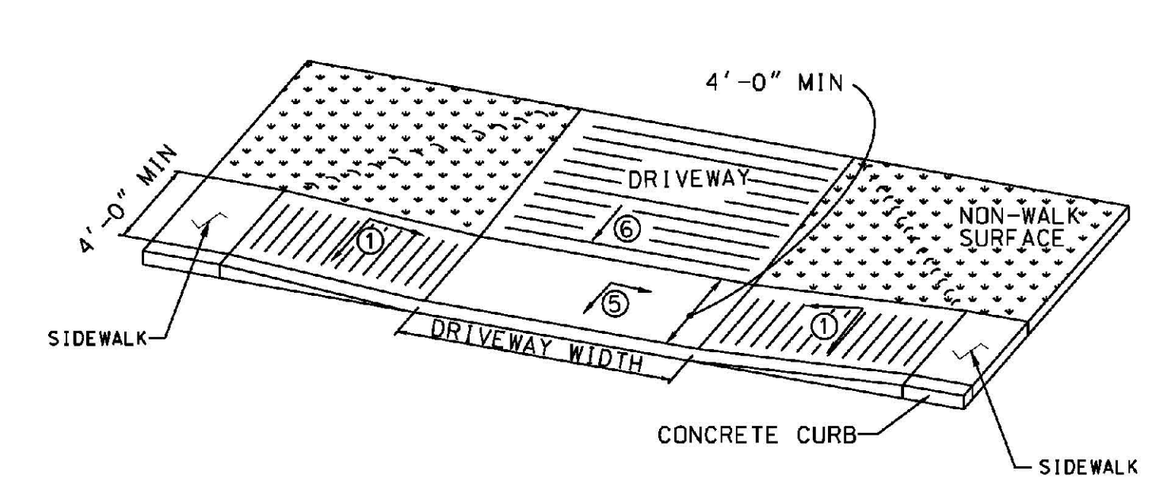

TYPE 3A: DRIVEWAY CROSSING
(NOTE: DRIVEWAY SURFACE AT LOWER ELEVATION THAN SIDEWALK SURFACE)

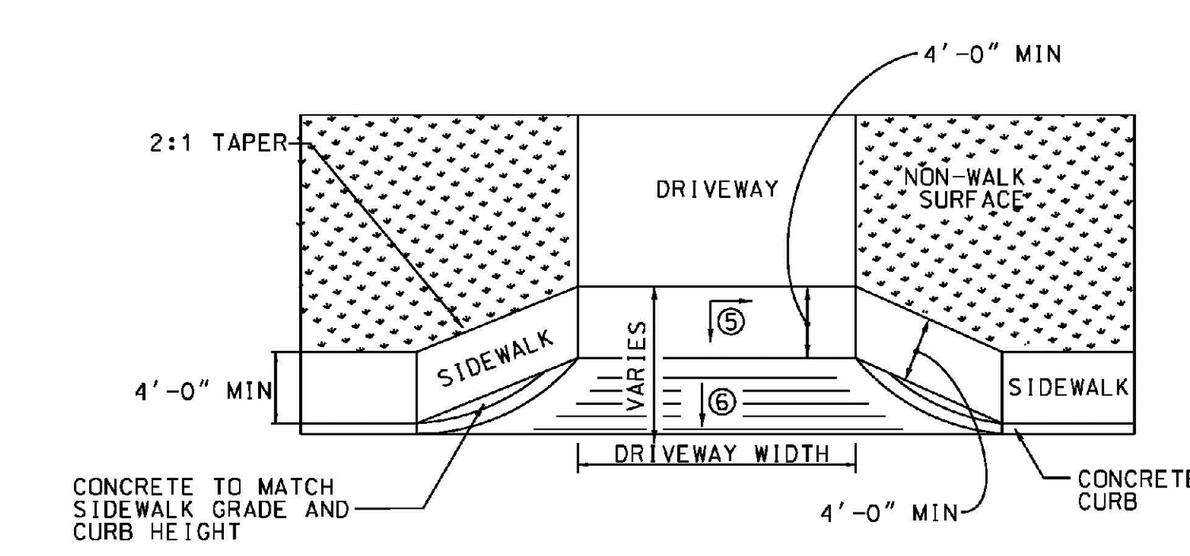

TYPE 4: DRIVEWAY CROSSING
(NOTE: DRIVEWAY AND SIDEWALK SURFACES AT SAME ELEVATION)

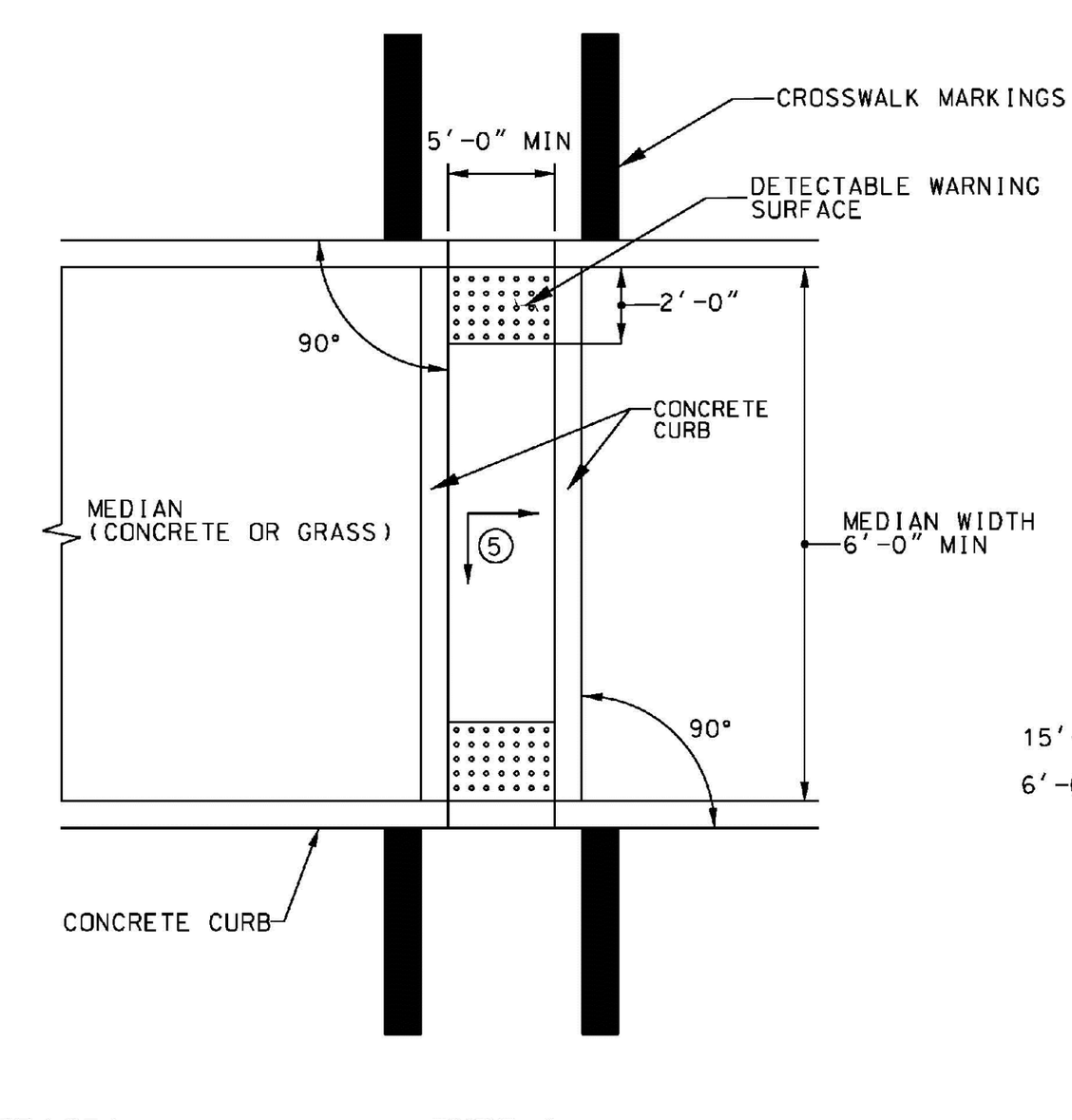

TYPE 1:
MEDIAN OR ISLAND
CUT-THROUGH OPENING

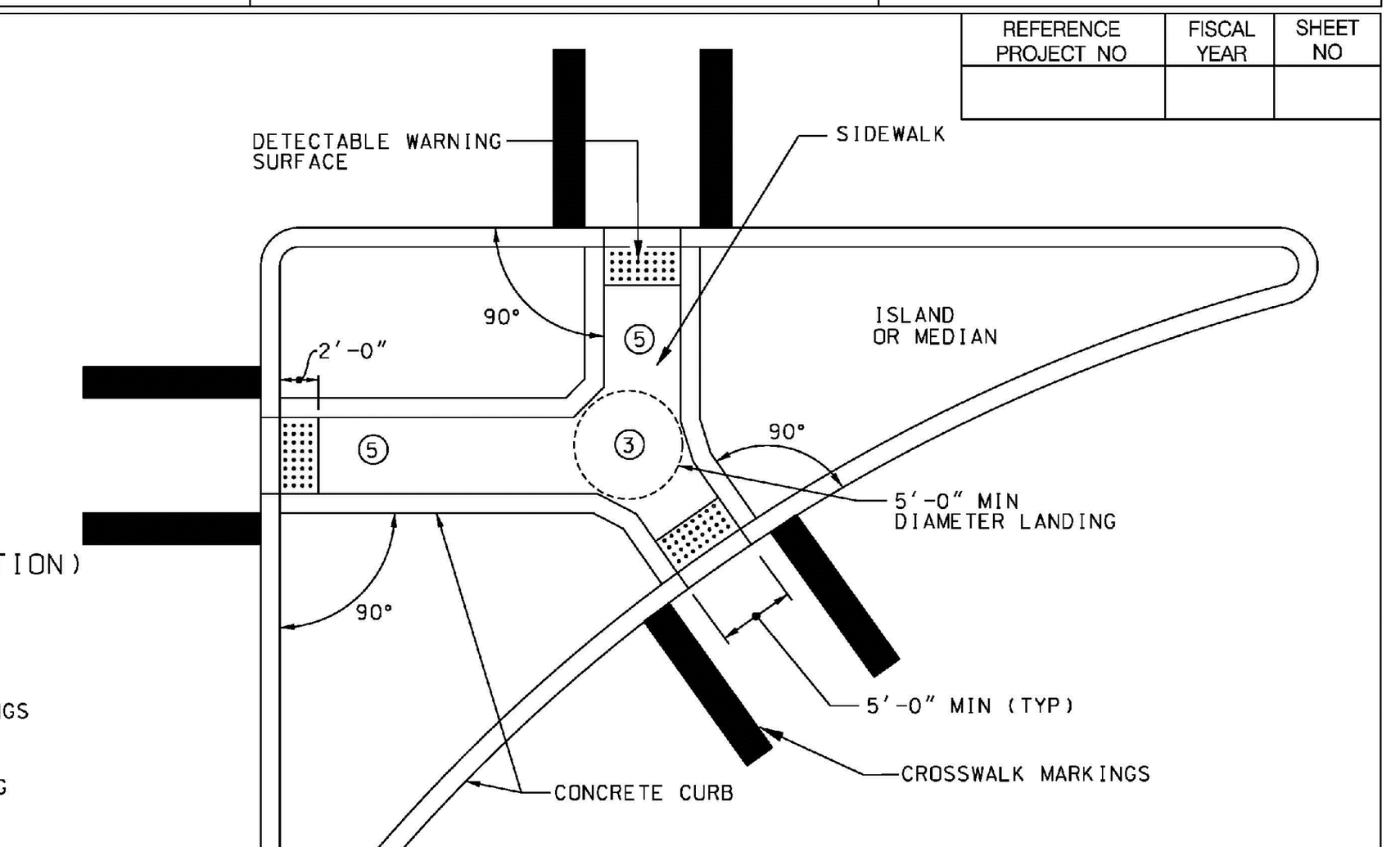

TYPE 2:
TURN-LANE ISLAND
CUT-THROUGH OPENING

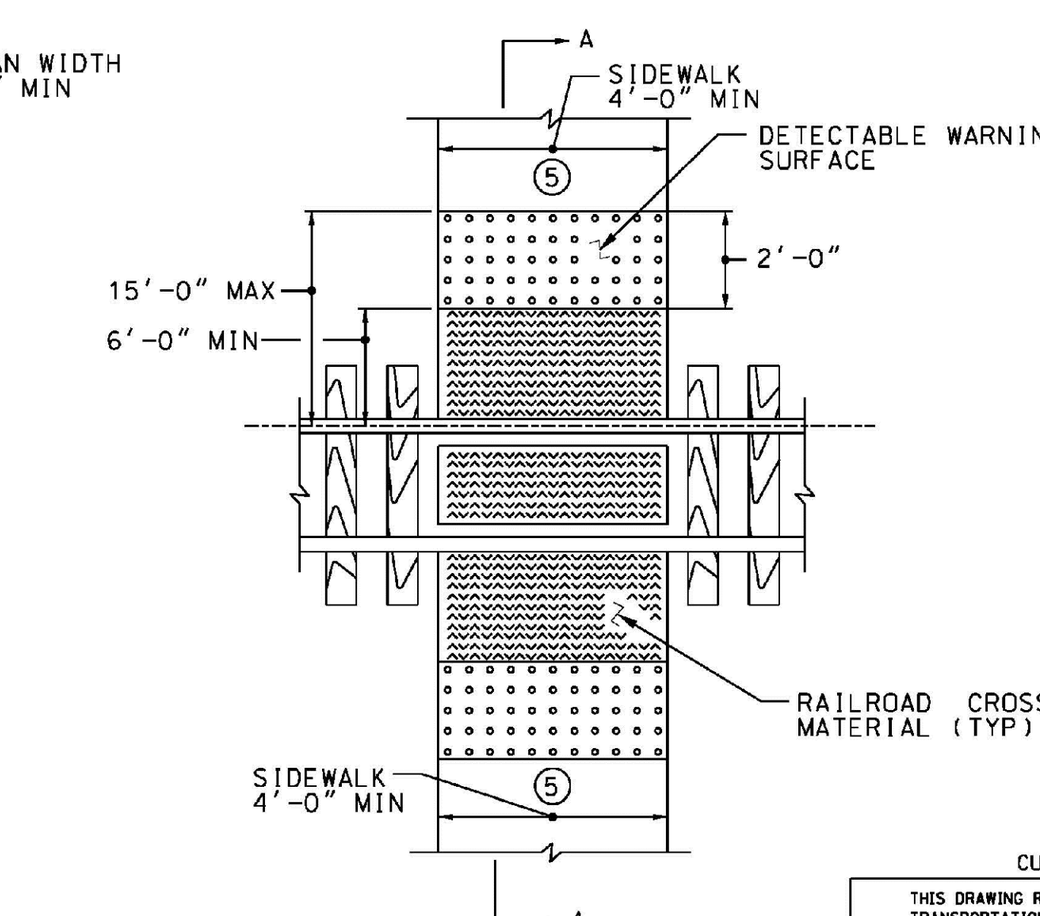

TYPE 3:
RAILROAD CROSSING

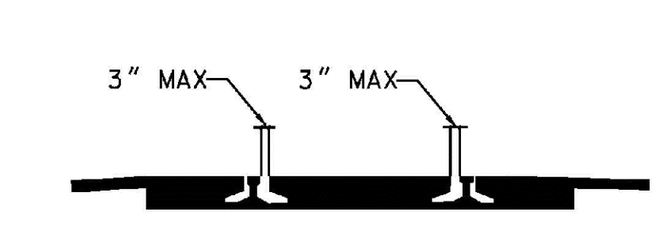

SECTION A-A

•SEE SHEET 1 OF 4 FOR DETAIL CALL OUTS ①, ②, ③, ⑤, ⑥.
•SEE SHEET 1 OF 4 FOR GENERAL NOTES FOR CURB RAMPS AND SIDEWALKS.

--SPECIFICATIONS--
CURRENT ALABAMA DEPARTMENT OF TRANSPORTATION

THIS DRAWING REPRESENTS DESIGNS PREPARED FOR USE BY THE ALABAMA DEPARTMENT OF TRANSPORTATION AND IS NOT TO BE COPIED, REPRODUCED, ALTERED, OR USED BY ANYONE, OR ANY ORGANIZATION, WITHOUT THE EXPRESSED WRITTEN CONSENT OF THE ALABAMA DEPARTMENT OF TRANSPORTATION REPRESENTATIVE AUTHORIZED TO APPROVE THIS USE. ANYONE MAKING UNAUTHORIZED USE OF THIS DRAWING MAY BE PROSECUTED TO THE FULLEST EXTENT OF THE LAW.

REVISIONS

ALABAMA DEPARTMENT OF TRANSPORTATION
1409 COLISEUM BOULEVARD
MONTGOMERY, AL 36130-3050

DESIGN BUREAU SPECIAL DRAWING

SIDEWALKS & CURB RAMPS AT DRIVEWAYS, RAILROAD, MEDIAN, & ISLAND CROSSINGS

DRAWN BY:
DATE DRAWN:

SPECIAL DRAWING NO. SW-618 (SHEET 4 OF 4) INDEX NO. 737

NOT TO SCALE

1 (C8.3) STANDARD HANDICAP RAMPS
NOT TO SCALE

CONTRACTOR SHALL CONSULT WITH THE CONTROLLING MUNICIPALITY OR JURISDICTION WHEN DETERMINING RAMP/SIDEWALK TYPE PRIOR TO INSTALLATION. ALL CONSTRUCTION SHALL COMPLY WITH THE STANDARDS OUTLINED IN THE LATEST EDITION OF "PEDESTRIAN RIGHT-OF-WAY ACCESSIBILITY GUIDELINES" (PROWAG)

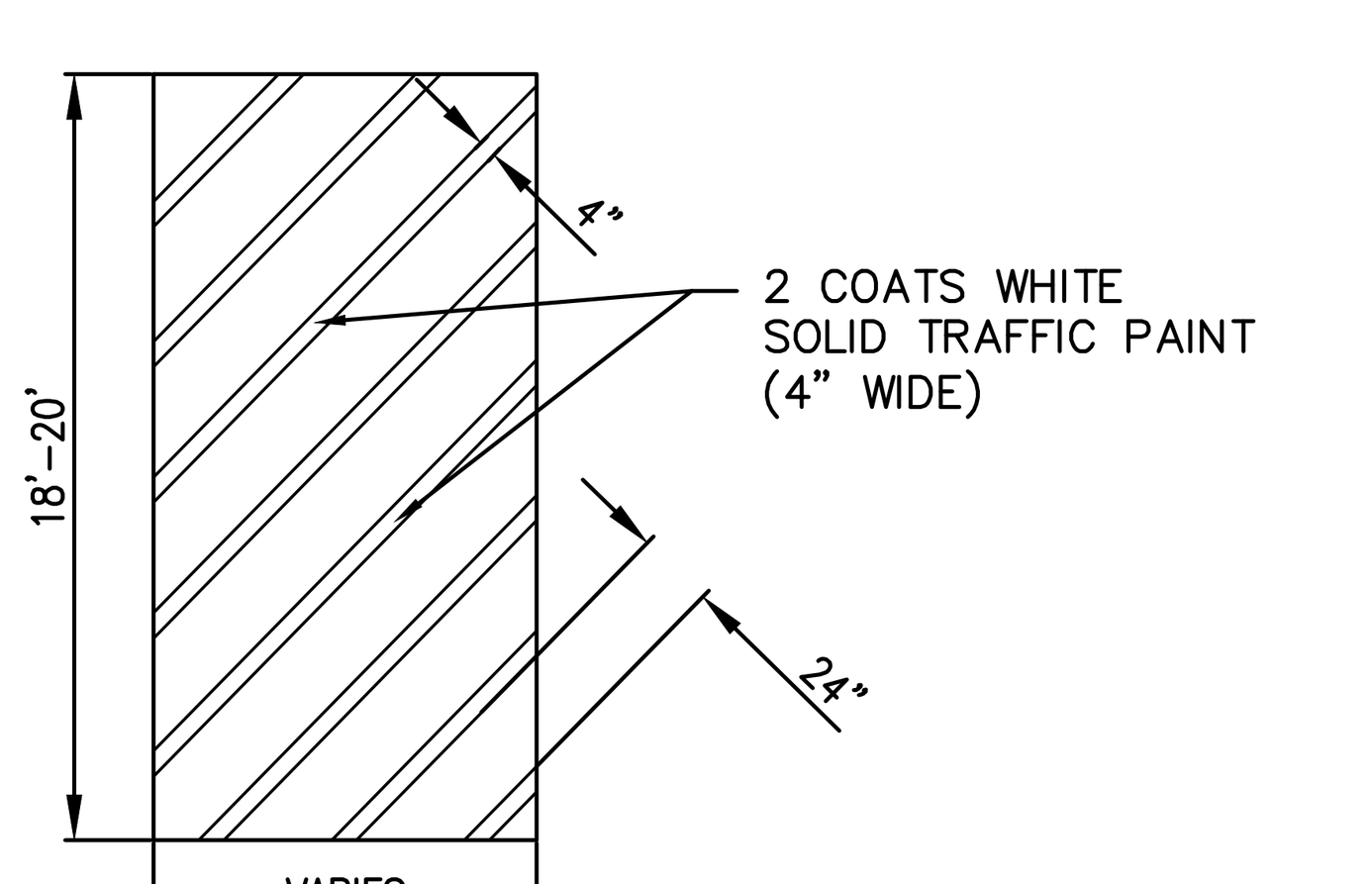

2 (C8.3) DIAGONAL STRIPING
NOT TO SCALE

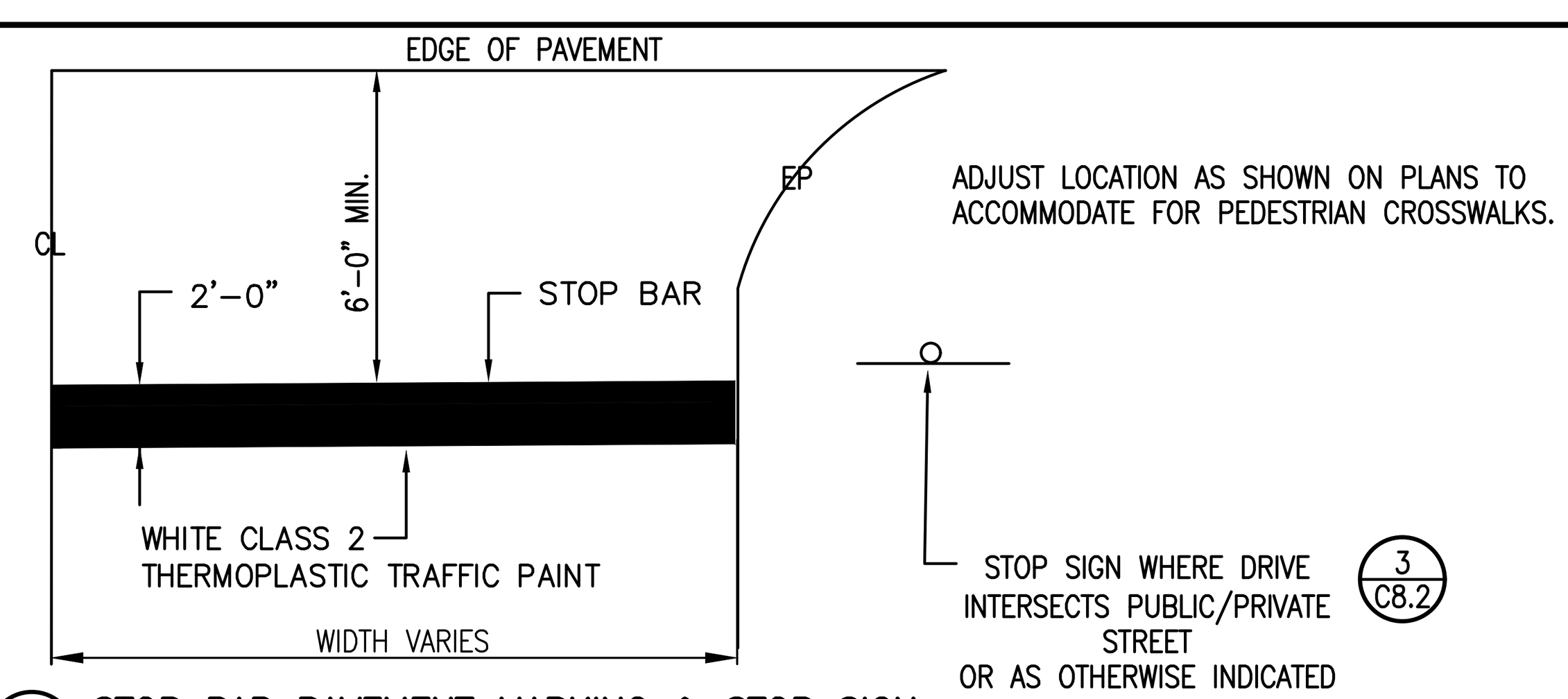

ADJUST LOCATION AS SHOWN ON PLANS TO ACCOMMODATE FOR PEDESTRIAN CROSSWALKS.

3 (C8.3) STOP BAR PAVEMENT MARKING & STOP SIGN
NOT TO SCALE

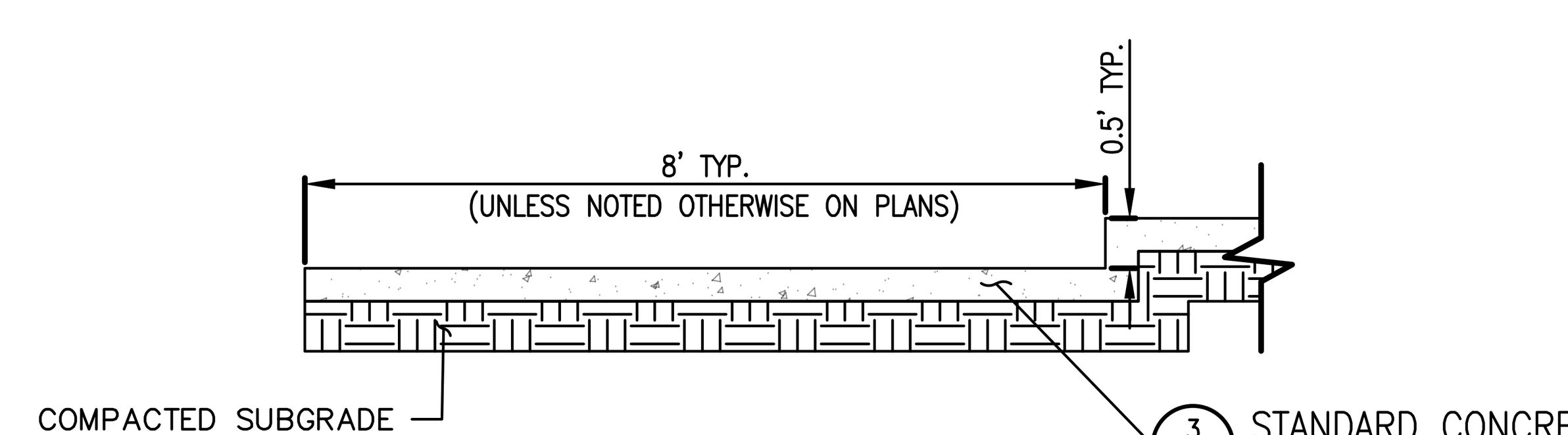

4 (C8.3) STEPPED SIDEWALK
NOT TO SCALE

JOHNSON & ASSOCIATES
ENGINEERING SURVEYING
1218 CHURCH STREET
HUNTSVILLE, ALABAMA 35801
1-256-533-7331
FAX 1-256-533-7332

REVISIONS

no.	date	description

NO. 16165 PROFESSIONAL ENGINEER STEPHEN L. WALKER
02/14/2022
SEAL

PHASE II - ROAD IMPROVEMENTS, PARKING LOT REPAIRS
ALABAMA A&M UNIVERSITY

Charles Williams & Associates, Inc
ARCHITECTS
3601 8TH AVE. SOUTH
BIRMINGHAM, ALABAMA 35222
PH: 205-250-0700
FAX: 205-250-0515

SHEET TITLE: CONSTRUCTION DETAILS
PROJECT NUMBER: CWA 2019-06B JA 1791EN
DATE: 02-14-2022
DRAWN BY: ATC/RDH
CHECKED BY: SW/ATC

SHEET NUMBER
C8.3

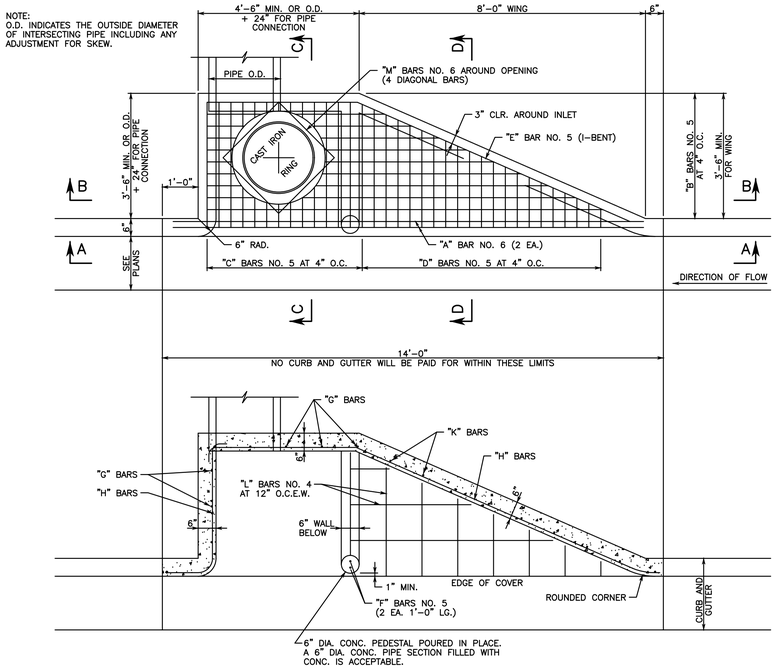

1 C8.4 "S" TYPE INLET PLAN VIEW
SCALE 1/2" = 1'-0"

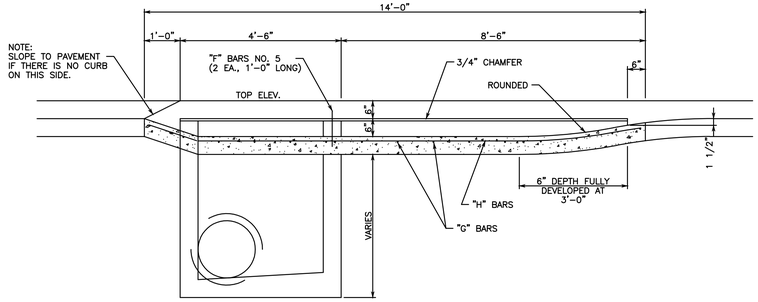

SECTION "A-A"
SCALE: 1/2" = 1'-0"

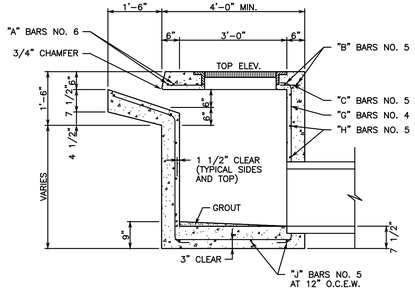

SECTION "C-C"
SCALE: 1/2" = 1'-0"

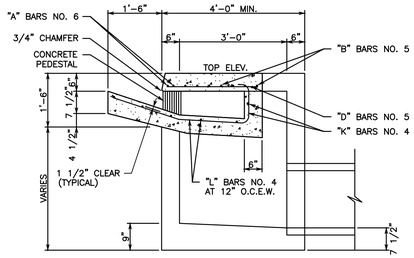

SECTION "D-D"
SCALE: 1/2" = 1'-0"

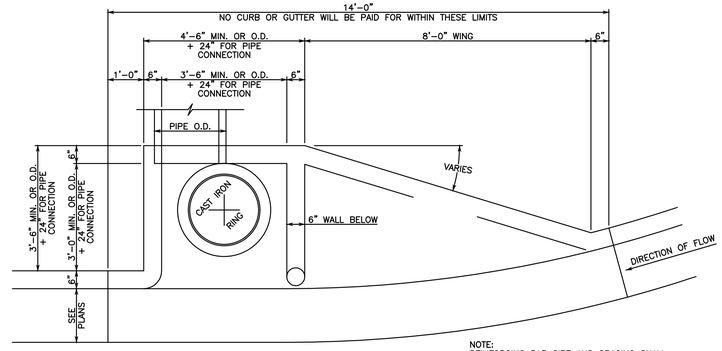

PLAN ON RADIUS
SCALE: 1/2"=1'-0"

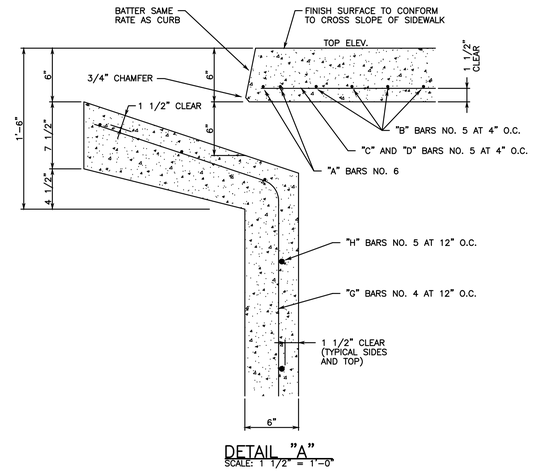

DETAIL "A"
SCALE: 1 1/2" = 1'-0"

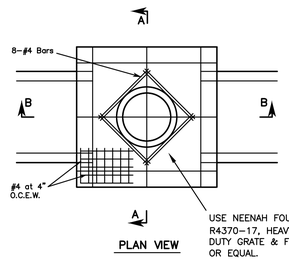

PLAN VIEW

NOTES

1. Dimension "A" is determined by the largest diameter pipe entering the Open Throat Inlet.
2. Steps are required on all inlets when dimension from bottom slab flow line to top of top slab is greater than 4'-0".
3. All concrete shall be class "A" and shall develope a minimum compressive strength of 3500 PSI in 28 days.
4. Reinforcing shall be intermediate grade deformed bars and shall conform to the requirements of the Standard Specifications for billet steel concrete reinforcement bars,ASTM A-15 and deformations conforming to ASTM A-305.
5. When brick construction is used, walls will be 8" brick when "H" is less than 5'-0". Use 12" brick when "H"is more than 5'-0". Float with 1/2" mortar on both sides.

INLET DIMENSIONS					
Pipe Size	A	B & F	D	E	W
12"	4'-4"	3'-0"	12"	8"	5'-4"
15"	4'-4"	3'-0"	15"	8"	5'-4"
18"	4'-4"	3'-0"	18"	8"	5'-4"
21"	4'-6"	3'-2"	21"	8"	5'-6"
24"	4'-9"	3'-5"	24"	8"	5'-9"
30"	5'-4"	4'-0"	30"	8"	6'-4"
36"	5'-10"	4'-6"	36"	8"	6'-10"

USE NEENAH FOUNDRY R4370-17, HEAVY DUTY GRATE & FRAME OR EQUAL.

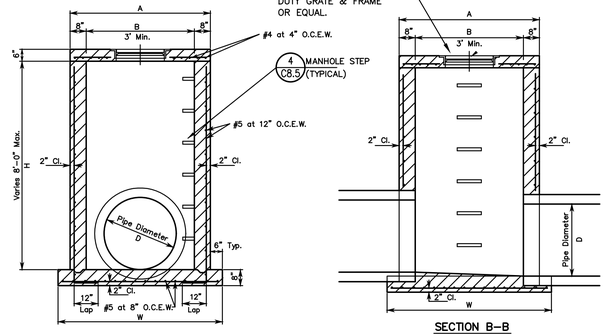

SECTION A-A

SECTION B-B

2 C8.4 GRATE INLET DETAILS - TRAFFIC TYPE
NOT TO SCALE

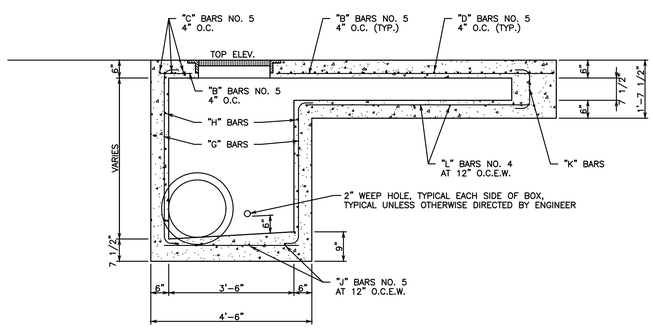

SECTION "B-B"
SCALE: 1/2" = 1'-0"

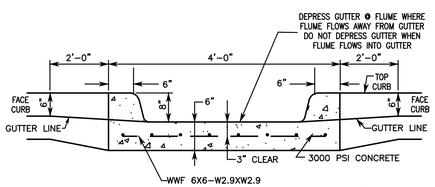

CONCRETE FLUME AT CURB & GUTTER OUTLET/INLET
NOT TO SCALE

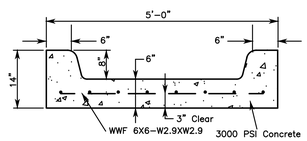

CONCRETE FLUME SECTION
NOT TO SCALE

3 C8.4 CONCRETE FLUME DETAILS
NOT TO SCALE

GENERAL NOTES

CONCRETE	ALL CONCRETE SHALL BE 3,000 PSI, 28 DAY COMPRESSIVE STRENGTH.
REINFORCING	ALL REINFORCEMENT SHALL BE DEFORMED BAR, GRADE 60.
INLET WINGS	WHERE THE DIRECTION OF FLOW IS FROM BOTH SIDES OF THE INLET, SIDE WING OPENINGS (AS SHOWN ON ONE SIDE ONLY) SHALL BE BUILT ON BOTH SIDES OF INLET. FOR EACH INLET SO BUILT PAYMENT WILL BE MADE UNDER ITEM "INLETS TYPE S, (DOUBLE WING)". WHERE ONE WING ONLY IS BUILT PAYMENT WILL BE MADE UNDER ITEM "INLETS TYPE S, (SINGLE WING)".
LARGE PIPE	TO ACCOMMODATE LARGE DIAMETER PIPE, OR TO FIT OTHER CONDITIONS, IT MAY BE NECESSARY TO INCREASE ONE OR BOTH PLAN DIMENSIONS OF THE INLET BOX AND COVER SLAB. NO ADDITIONAL COMPENSATION WILL BE ALLOWED FOR THE CORRESPONDING INCREASE IN CONSTRUCTION MATERIALS WHERE CHANGES IN DIMENSIONS ARE REQUIRED.
PIPE CONNECTIONS	PIPE MAY CONNECT WITH INLETS FROM ANY DIRECTION, AND AS MANY CONNECTIONS SHALL BE MADE AS ARE NECESSARY.
WEEP HOLES	2" MINIMUM DIAMETER WEEP HOLES SHALL BE CONSTRUCTED IN INLETS AS DIRECTED BY THE ENGINEER TO FACILITATE SUBGRADE DRAINAGE.
RING AND COVER	SHALL CONFORM TO THE REQUIREMENTS OF CLASS 30 FOR GRAY IRON CASTING A.S.T.M. DESIGNATION A48.
MANHOLE STEPS	MANHOLE STEPS ARE REQUIRED WHEN DIMENSION FROM BOTTOM SLAB FLOW LINE TO TOP SLAB IS GREATER THAN 4'-0". STEPS SHALL BE INSTALLED AT 1'-4" O.C. VERTICALLY.

JOHNSON & ASSOCIATES
ENGINEERING SURVEYING
1218 CHURCH STREET
HUNTSVILLE, ALABAMA 35801
1-256-533-7331
FAX 1-256-533-7332

REVISIONS

no	date	description

STATE OF ALABAMA
NO. 10165
PROFESSIONAL
ENGINEER
STEPHEN L. WALKER
02/14/2022
SEAL

PHASE II - ROAD IMPROVEMENTS, PARKING LOT REPAIRS
ALABAMA A&M UNIVERSITY

Charles Williams & Associates, Inc
ARCHITECTS
3601 8TH AVE. SOUTH
BIRMINGHAM, ALABAMA 35222
PH: 205-250-0700
FAX: 205-250-0515

SHEET TITLE: CONSTRUCTION DETAILS
PROJECT NUMBER: CWA 2019-06B JA 1791EN
DATE: 02-14-2022
DRAWN BY: ATC/RDH
CHECKED BY: SW/ATC

SHEET NUMBER
C8.4

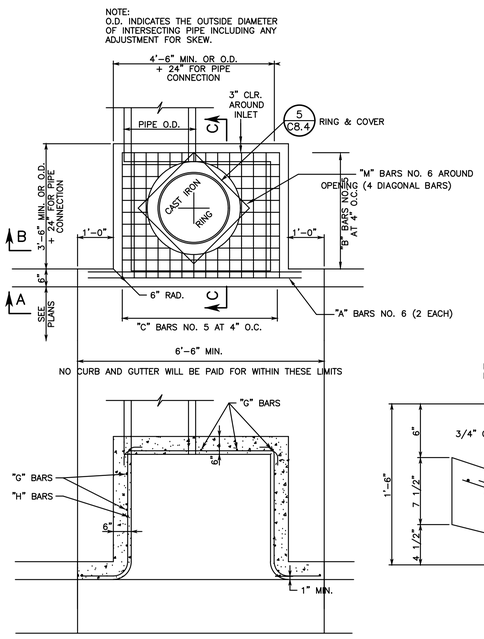

PLAN VIEW
SCALE: 1/2"=1'-0"

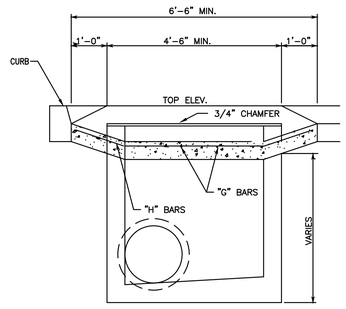

SECTION "A-A"
SCALE: 1/2" = 1'-0"

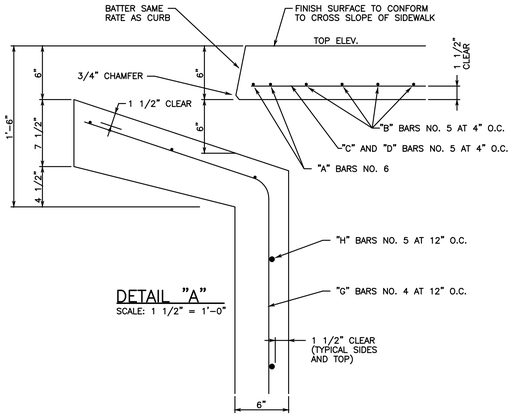

DETAIL "A"
SCALE: 1 1/2" = 1'-0"

GENERAL NOTES

CONCRETE
ALL CONCRETE SHALL BE 3,000 PSI, 28 DAY COMPRESSIVE STRENGTH.

REINFORCING
ALL REINFORCEMENT SHALL BE DEFORMED BAR, GRADE 60.

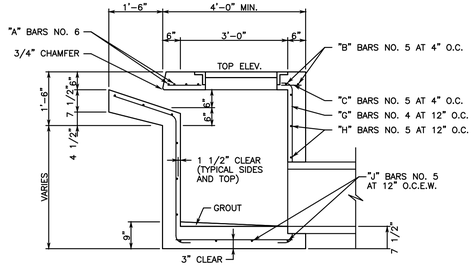

SECTION "C-C"
SCALE: 1/2" = 1'-0"

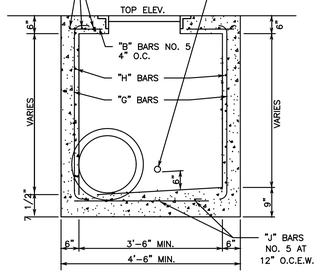

SECTION "B-B"
SCALE: 1/2" = 1'-0"

1 C8.5 STANDARD CURB INLET
NOT TO SCALE



COVER DETAIL

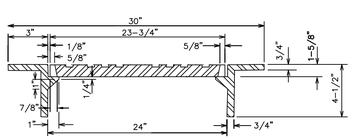

SECTION

NOTE:
COVER AND FRAME SHALL CONFORM TO THE REQUIREMENTS OF CLASS 30 FOR GRAY IRON CASTING. ASTM (A 48) FRAME B COVER SHALL BE CERTIFIED BY MFG. TO BE TRAFFIC BEARING WHEN APPLICABLE.

5 C8.5 RING AND COVER FOR STORM DRAIN
NOT TO SCALE CITY OF HUNTSVILLE

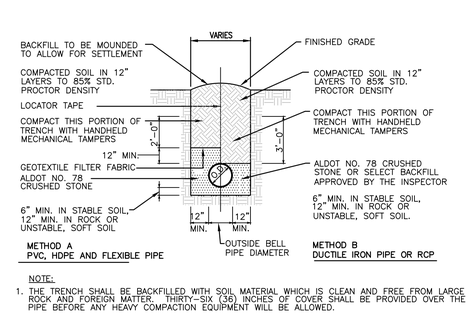

NOTE:
1. THE TRENCH SHALL BE BACKFILLED WITH SOIL MATERIAL WHICH IS CLEAN AND FREE FROM LARGE ROCK AND FOREIGN MATTER. THIRTY-SIX (36) INCHES OF COVER SHALL BE PROVIDED OVER THE PIPE BEFORE ANY HEAVY COMPACTION EQUIPMENT WILL BE ALLOWED.
2. COMPACTION TESTS WILL NOT BE REQUIRED AS LONG AS THE CONTRACTOR IS FOLLOWING THE PROPER PROCEDURES AND USING PROPER EQUIPMENT AND TECHNIQUES IN BACKFILLING OPERATIONS.

UNDERGROUND UTILITY PIPE BEDDING DETAILS IN NON-TRAFFIC AREAS
NOT TO SCALE

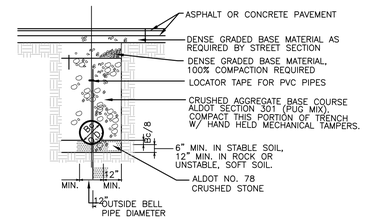

UNDERGROUND UTILITY PIPE BEDDING DETAILS WITHIN PROPOSED TRAFFIC AREAS
NOT TO SCALE

NOTE: USE THESE DETAILS FOR ALL UNDERGROUND UTILITY PIPES INCLUDING, BUT NOT LIMITED TO STORM, SANITARY SEWER, GAS, ELECTRIC, TELEPHONE, WATER, ETC. SIDE SLOPES AND REQUIREMENTS FOR TRENCHING SHALL COMPLY WITH OSHA GUIDLINES.

2 C8.5 UNDERGROUND UTILITY PIPE BEDDING
NOT TO SCALE

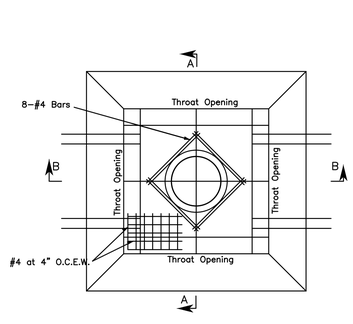

PLAN VIEW

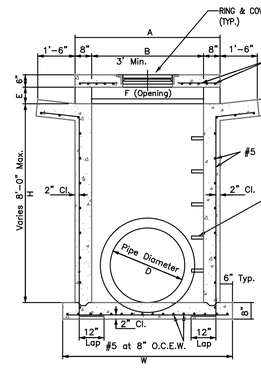

SECTION A-A

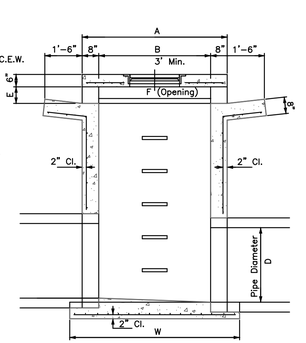

SECTION B-B

NOTES
1. DIMENSION "A" IS DETERMINED BY THE LARGEST DIAMETER PIPE ENTERING THE OPEN THROAT INLET.
2. STEPS ARE REQUIRED ON ALL INLETS WHEN DIMENSION FROM BOTTOM SLAB FLOW LINE TO TOP OF TOP OF SLAB IS GREATER THAN 4'-0".
3. ALL CONCRETE SHALL BE CLASS "A" AND SHALL DEVELOP A MINIMUM COMPRESSIVE STRENGTH OF 3500 PSI IN 28 DAYS.
4. REINFORCING SHALL BE GRADE 60 DEFORMED BARS AND SHALL CONFORM TO THE REQUIREMENTS OF THE STANDARD SPECIFICATIONS FOR BILLET STEEL CONCRETE REINFORCEMENT BARS, ASTM A-15 AND DEFORMATIONS CONFORMING TO ASTM A-305.
5. WHEN BRICK CONSTRUCTION US USED, WALLS WILL BE 8" BRICK WHEN "H" IS LESS THAN 5'-0". USE 12" BRICK WHEN "H" IS MORE THAN 5'-0". FLOAT WITH 1/2" MORTAR ON BOTH SIDES.
6. PROVIDE CONCRETE APRON AT THROAT OPENINGS.

INLET DIMENSIONS					
Pipe Size	A	B & F	D	E	W
12"	4'-4"	3'-0"	12"	8"	5'-4"
15"	4'-4"	3'-0"	15"	8"	5'-4"
18"	4'-4"	3'-0"	18"	8"	5'-4"
21"	4'-6"	3'-2"	21"	8"	5'-6"
24"	4'-9"	3'-5"	24"	8"	5'-9"
30"	5'-4"	4'-0"	30"	8"	6'-4"
36"	5'-10"	4'-6"	36"	8"	6'-10"
48"	6'-4"	5'-0"	48"	8"	7'-4"

3 C8.5 OPEN THROAT INLET
NOT TO SCALE

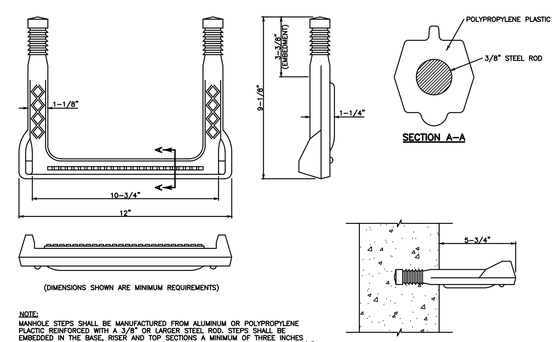

SECTION A-A

(DIMENSIONS SHOWN ARE MINIMUM REQUIREMENTS)

NOTE:
MANHOLE STEPS SHALL BE MANUFACTURED FROM ALUMINUM OR POLYPROPYLENE PLASTIC REINFORCED WITH A 3/8" OR LARGER STEEL ROD. STEPS SHALL BE EMBEDDED IN THE BASE, RISER AND TOP SECTIONS A MINIMUM OF THREE INCHES AT THE TIME OF CONSTRUCTION. MANHOLE STEPS SHALL BE A MINIMUM OF 10-3/4" WIDE AND EXTEND FROM THE MANHOLE A MINIMUM OF 5-3/4".

4 C8.5 MANHOLE STEP DETAIL
NOT TO SCALE

REVISIONS

no	date	description

ALABAMA
NO. 10165
PROFESSIONAL
ENGINEER
STEPHEN L. WALKER
02/14/2022
SEAL

PHASE II - ROAD IMPROVEMENTS, PARKING LOT REPAIRS
ALABAMA A&M UNIVERSITY

Charles Williams & Associates, Inc
ARCHITECTS
3601 8TH AVE. SOUTH
BIRMINGHAM, ALABAMA 35222
PH: 205-250-0700
FAX: 205-250-0515

SHEET TITLE:
CONSTRUCTION DETAILS
PROJECT NUMBER:
CWA 2019-06B JA 1791EN
DATE:
02-14-2022
DRAWN BY:
ATC/RDH
CHECKED BY:
SW/ATC

SHEET NUMBER
C8.5

JOHNSON & ASSOCIATES
ENGINEERING SURVEYING
1218 CHURCH STREET
HUNTSVILLE, ALABAMA 35801
1-256-533-7331
FAX 1-256-533-7332

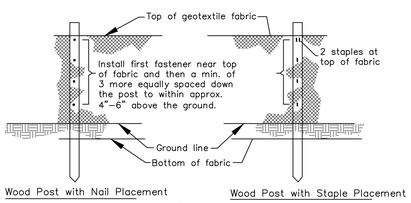

FASTENERS FOR SILT FENCES
(Not to scale)

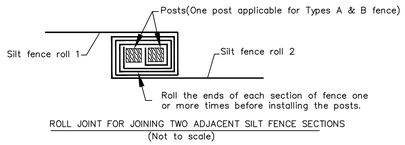

ROLL JOINT FOR JOINING TWO ADJACENT SILT FENCE SECTIONS
(Not to scale)

INSTALLATION

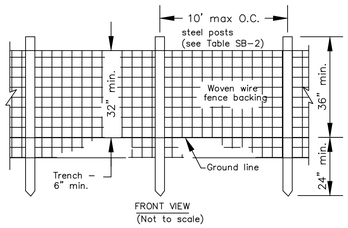

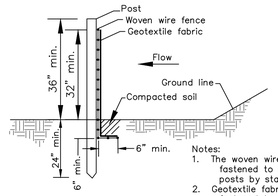

Notes:
1. The woven wire fencing shall be fastened to the upstream side of posts by staples or wire ties.
2. Geotextile fabric shall be securely fastened to the woven wire fencing.
3. Machine trenched geotextile shall be trenched vertical at least 8" deep.

TYPE "A" SILT FENCE

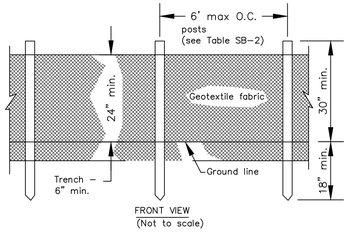

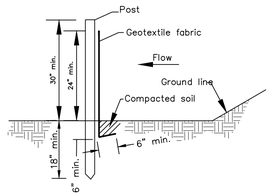

TYPE "B" SILT FENCE

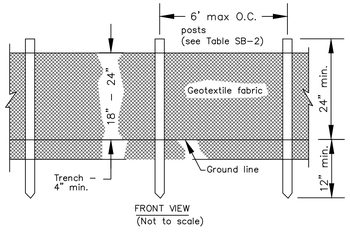

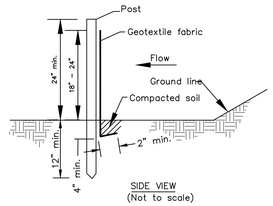

TYPE "C" SILT FENCE



SILT FENCE "J" HOOK DETAIL

1 C8.6 **SILT FENCE**
NOT TO SCALE

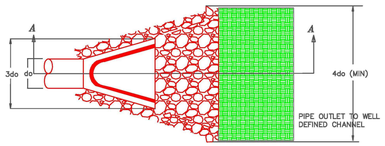

PLAN

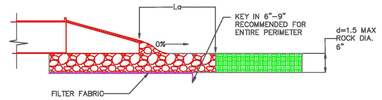

SECTION

PIPE DIAMETER INCHES	DISCHARGE ft3/s	APRON LENGTH,La ft	RIP RAP D50 DIAMETER MIN INCHES
12	5	10	4
	10	13	6
18	10	10	6
	20	16	8
	30	23	12
	40	26	16
24	30	16	8
	40	26	8
	50	26	12
	60	30	16

5 C8.6 **END TREATMENT**
NOT TO SCALE

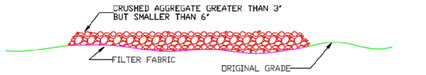

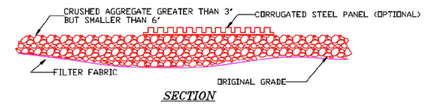

SECTION

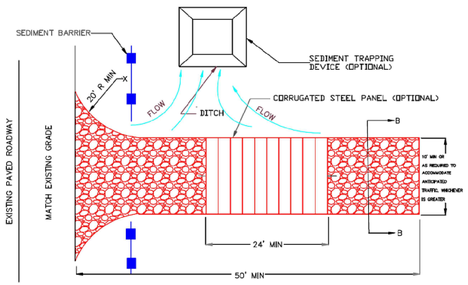

PLAN

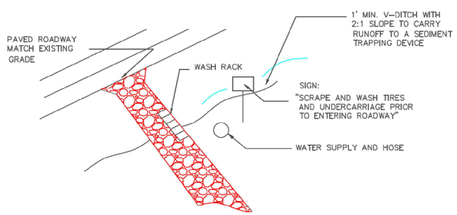

PLAN VIEW

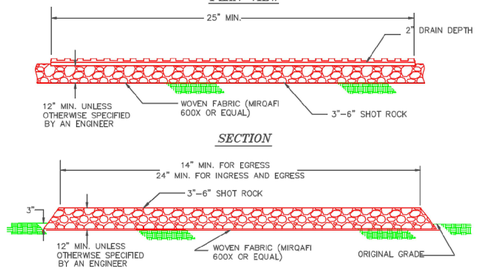

SECTION

SECTION

WASHDOWN STATION

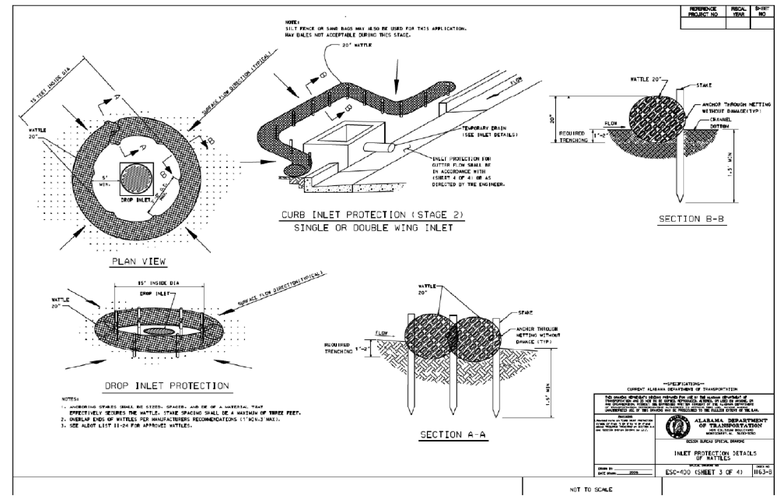

POSITION WATTLES SO THAT THE TOP OF WATTLE IS LEVEL WITH THE BOTTOM OF THE WATTLE ABOVE IT. TALLER WATTLE MAY BE USED TO MEET THIS REQUIREMENT.

SAND BAGS SHALL BE USED TO HOLD WATTLES IN PLACE IN PAVED AREAS

2 C8.6 **WATTLE DETAILS**
NOT TO SCALE

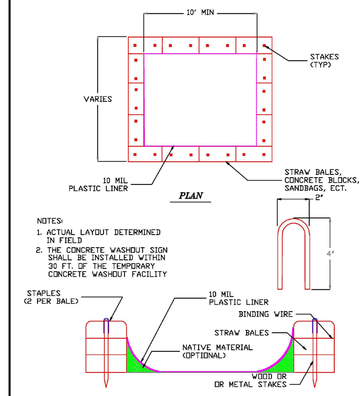

NOTES:
1. ACTUAL LAYOUT DETERMINED IN FIELD
2. THE CONCRETE WASHOUT SIGN SHALL BE INSTALLED WITHIN 30 FT. OF THE TEMPORARY CONCRETE WASHOUT FACILITY

6 C8.6 **CONCRETE WASHDOWN CONTAINMENT DETAIL**
NOT TO SCALE

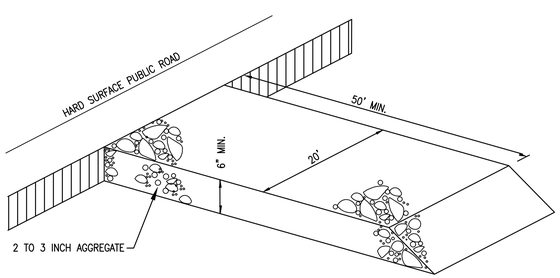

3 C8.6 **GRAVEL CONSTRUCTION ENTRANCE**
NOT TO SCALE

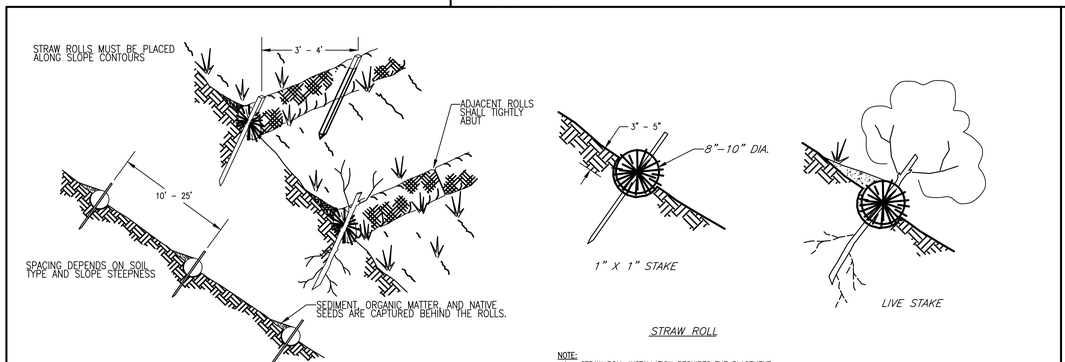

STRAW ROLL

NOTE:
1. STRAW ROLL INSTALLATION REQUIRES THE PLACEMENT AND SECURE STAKING OF THE ROLL IN A TRENCH, 3"–5" DEEP, DUG ON CONTOUR. RUNOFF MUST NOT BE ALLOWED TO RUN UNDER OR AROUND ROLL.

4 C8.6 **STRAW ROLL**
NOT TO SCALE

REVISIONS

no	date	description

ALABAMA
NO. 10165
PROFESSIONAL
ENGINEER
STEPHEN L. WALKER
02/14/2022
SEAL

PHASE II - ROAD IMPROVEMENTS, PARKING LOT REPAIRS
ALABAMA A&M UNIVERSITY

Charles Williams & Associates, Inc
ARCHITECTS
3601 6TH AVE. SOUTH
BIRMINGHAM, ALABAMA 35222
PH: 205-250-0700
FAX: 205-250-0515

SHEET TITLE:
CONSTRUCTION DETAILS
PROJECT NUMBER:
CWA 2019-06B JA 1791EN
DATE:
02-14-2022
DRAWN BY:
ATC/RDH
CHECKED BY:
SW/ATC

SHEET NUMBER
C8.6

JOHNSON & ASSOCIATES
ENGINEERING SURVEYING
1218 CHURCH STREET
HUNTSVILLE, ALABAMA 35801
1–256–533–7331
FAX 1–256–533–7332

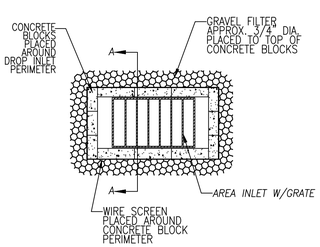

CONCRETE BLOCK FILTER
PLAN VIEW

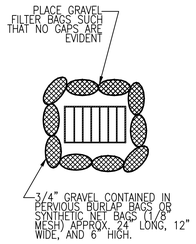

GRAVEL FILTER BAGS
PLAN VIEW

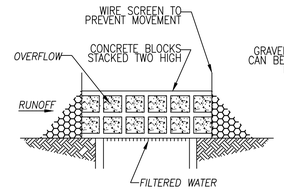

CONCRETE BLOCK FILTER
PROFILE SECTION A-A

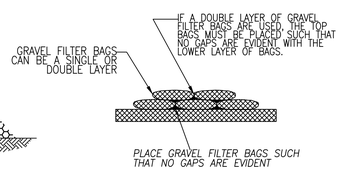

GRAVEL FILTER BAGS
PROFILE VIEW

NOTE:
1. GRAVEL FILTERS CAN BE USED ON PAVEMENT OR BARE GROUND.

1 C8.7 **TYPICAL EXCAVATED DROP INLET PROTECTION (EIP)**

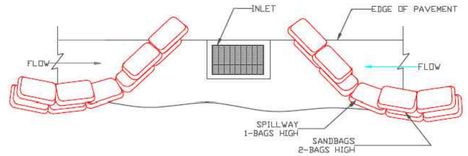

TYPICAL PROTECTION FOR INLET ON SUMP

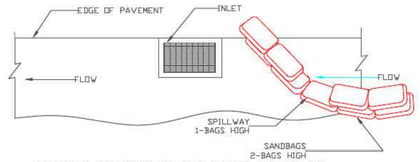

TYPICAL PROTECTION FOR INLET ON GRADE

NOTES:
1. INTENDED FOR SHORT TERM USE.
2. USE TO INHIBIT NON-STORM WATER FLOW
3. ALLOW FOR PROPER MAINTENANCE AND CLEANUP.
4. BAGS MUST BE REMOVED AFTER ADJACENT OPERATION IS COMPLETED.
5. NOT APPLICABLE IN AREAS WITH HIGH SILTS AND CLAYS WITHOUT FILTER FABRIC.

DANDY CURB SACK™

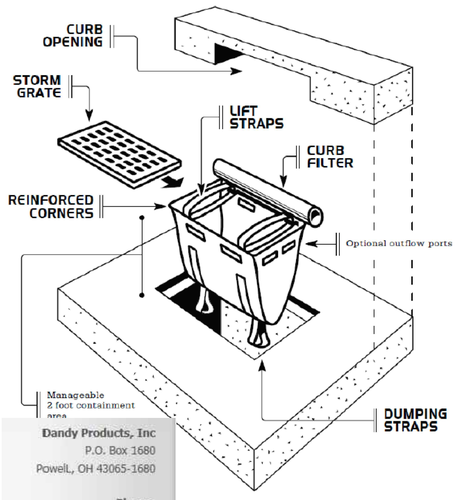

Dandy Products, Inc
P.O. Box 1680
Powell, OH 43065-1680

Phone:
800-591-2284
740-881-2790
Customer Service:
800-591-2284, Ext. 2

2 C8.7 **DANDY CURB SACK**

SILT-SAVER ROUND FRAME
P/N SS-100

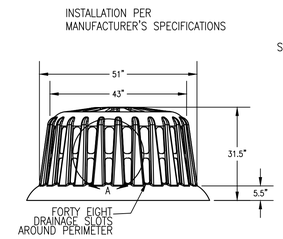

PROFILE VIEW

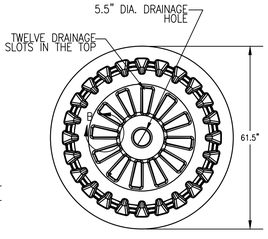

PLAN VIEW

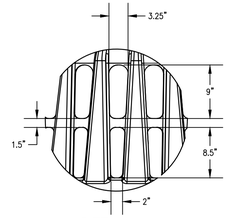

DETAIL A

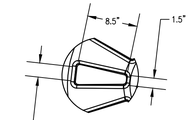

DETAIL B

CONTRACTOR MAY SUBSTITUTE AN EQUIVALENT PRODUCT

SILT-SAVER LOGO AND PATENT NO. MOLDED INTO PART. SILT-SAVER LABEL IS PLACED OVER LOGO AREA ON OUTSIDE OF PART

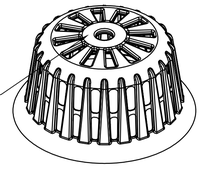

ISOMETRIC VIEW

3 C8.7 **SILVER ROUND FRAME**
NOT TO SCALE

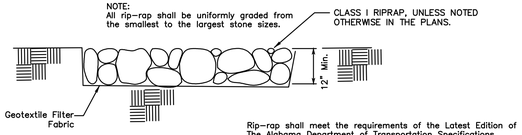

Rip-rap shall meet the requirements of the Latest Edition of The Alabama Department of Transportation Specifications, Section 814.01 (a) Class 1 Rip-rap. H=12" Min.

4 C8.7 **RIPRAP DETAIL**
NOT TO SCALE



6 C8.7 **PREFABRICATED SPEED BUMP**
NOT TO SCALE

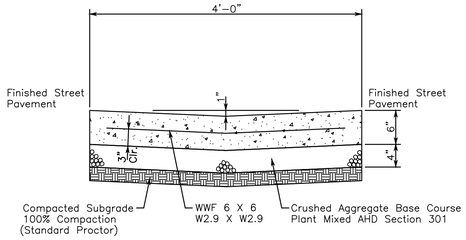

7 C8.7 **VALLEY GUTTER**
NOT TO SCALE

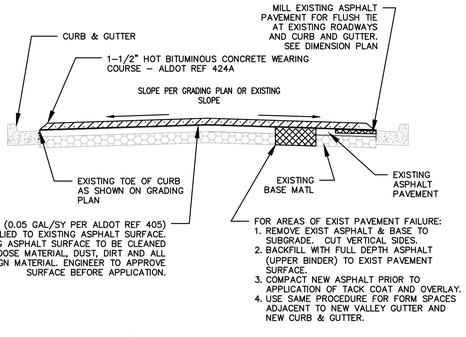

5 C8.7 **ASPHALT PAVEMENT OVERLAY DETAIL**
NOT TO SCALE

MATERIALS, BRANDS, & SUPPLIER'S INFORMATION, ETC. AS SHOWN HEREON, ARE RECOMMENDED FOR THIS PROJECT. CONTRACTOR MAY SUBSTITUTE AN EQUIVALENT PRODUCT, BRAND OR MATERIAL THAT MEETS THE SPECIFICATIONS, CODES, AND OTHER REQUIREMENTS OUTLINED IN THE PLANS AND SPECIFICATIONS FOR THIS PROJECT. CONTRACTOR WILL BE REQUIRED TO SUBMIT SHOP DRAWINGS, PIPING AND BRACING PLANS, EQUIPMENT, ETC. FOR THE VARIOUS COMPONENTS SHOWN HEREON, FOR REVIEW AND APPROVAL BY THE PROJECT ENGINEER(S).

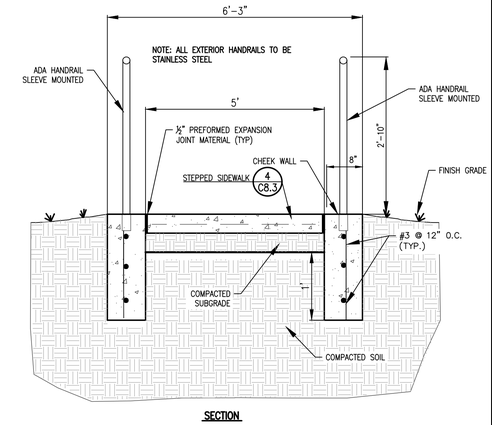

SECTION

8 C8.7 **HANDRAIL FOR STEPPED SIDEWALK (WITH CHEEK WALL)**
NOT TO SCALE

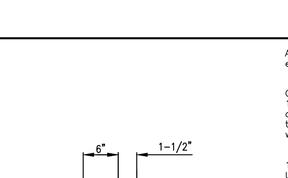

9 C8.7 **VERTICAL CONCRETE CURB**
NOT TO SCALE

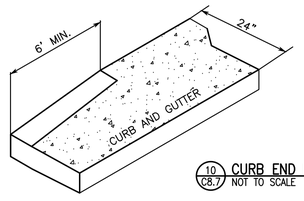

10 C8.7 **CURB END DETAIL**
NOT TO SCALE

JOHNSON & ASSOCIATES
ENGINEERING SURVEYING
1218 CHURCH STREET
HUNTSVILLE, ALABAMA 35801
1-256-533-7331
FAX 1-256-533-7332

REVISIONS
no. | date | description

STATE OF ALABAMA
STEPHEN L. WALKER
NO. 16165
PROFESSIONAL ENGINEER
02/14/2022
SEAL

PHASE II - ROAD IMPROVEMENTS, PARKING LOT REPAIRS
ALABAMA A&M UNIVERSITY

Charles Williams & Associates, Inc
ARCHITECTS
3601 6TH AVE. SOUTH
BIRMINGHAM, ALABAMA 35222
PH: 205-250-0700
FAX: 205-250-0515

SHEET TITLE:
CONSTRUCTION DETAILS
PROJECT NUMBER:
CWA 2019-06B JA 1791EN
DATE:
02-14-2022
DRAWN BY:
ATC/RDH
CHECKED BY:
SW/ATC

SHEET NUMBER
C8.7

Section 2723

Engineered Surface Drainage Products

GENERAL
PVC surface drainage inlets shall be of the curb inlet structure type as indicated on the contract drawings and referenced within the contract specifications. The **ductile iron frame, grate and hood** for each of these structures are to be considered an integral part of the surface drainage inlet and shall be furnished by the same manufacturer. The curb inlet structure shall be as manufactured by Nyloplast a division of Advanced Drainage Systems, Inc. or prior approved equal.

MATERIALS
The curb inlet structure required for this contract shall be manufactured from PVC pipe stock, utilizing a thermo-molding process to reform the pipe stock to the specified configuration. The drainage pipe connection stubs shall be manufactured form PVC pipe stock and formed to provide a watertight connection with the specified pipe system. This joint tightness shall conform to ASTM D3212 for joints for drain and sewer plastic pipe using flexible elastomeric seals. The flexible elastomeric seals shall conform to ASTM F477. The pipe bell spigot shall be joined to the main body of the structure. The raw material used to manufacture the pipe stock that is used to manufacture the main body and pipe stubs of the surface drainage inlets shall conform to ASTM D1784 cell class 12454.

The grate, frame and hood for all curb inlet structures shall be ductile iron and shall be made specifically for each so as to provide a round bottom flange that closely matches the diameter of the PVC structure body. The grate, frame and hood shall be capable of supporting H-20 wheel loading for traffic areas. The hood section will have a solid back and be adjustable by use of three (3) locking hex head bolts. The metal used in the manufacture of the castings shall conform to ASTM A536 grade 70-50-05 for ductile iron.

INSTALLATION
The specified PVC surface drainage inlet shall be installed using conventional flexible pipe backfill materials and procedures. The backfill material shall be crushed stone or other granular material meeting the requirements of class 1, class 2, or class 3 material as defined in ASTM D2321. Bedding and backfill for the curb inlet structure shall be placed and compacted uniformly in accordance with ASTM D2321. The curb inlet structure body will be cut at the time of the final grade. No brick, stone or concrete block will be required to set the grate to the final grade height. For H-20 load rated installations, a concrete ring will be poured under the frame, grate, and hood. The concrete slab must be designed taking into consideration local soil conditions, traffic loading, and other applicable design factors. For other installation considerations such as migration of fines, ground water, and soft foundations refer to ASTM D2321 guidelines.

THIS PRINT DISCLOSES SUBJECT MATTER IN WHICH NYLOPLAST HAS PROPRIETARY RIGHTS. THE RECEIPT OR POSSESSION OF THIS PRINT DOES NOT CONFER, TRANSFER, OR LICENSE THE USE OF THE DESIGN OR TECHNICAL INFORMATION SHOWN HEREIN REPRODUCTION OF THIS PRINT OR ANY INFORMATION CONTAINED HEREIN, OR MANUFACTURE OF ANY ARTICLE HEREFROM, FOR THE DISCLOSURE TO OTHERS IS FORBIDDEN, EXCEPT BY SPECIFIC WRITTEN PERMISSION FROM NYLOPLAST. ©2013 NYLOPLAST	DRAWN BY CJA; DATE 03-10-00; REVISED BY NMH; DATE 03-10-16; DWG SIZE A	MATERIAL; PROJECT NO./NAME; SCALE 1:1 SHEET 1 OF 1	Nyloplast 3130 VERONA AVE BUFORD, GA 30518 PHN (770) 932-2443 FAX (770) 932-2490 www.nyloplast-us.com; TITLE 2 FT X 2 FT & 2 FT X 3 FT CURB INLET STRUCTURE SPECIFICATIONS; DWG NO. 7002-110-005 REV H

NYLOPLAST 2 FT X 3FT CURB INLET STRUCTURE: 30 _ _ AGR _ _ X

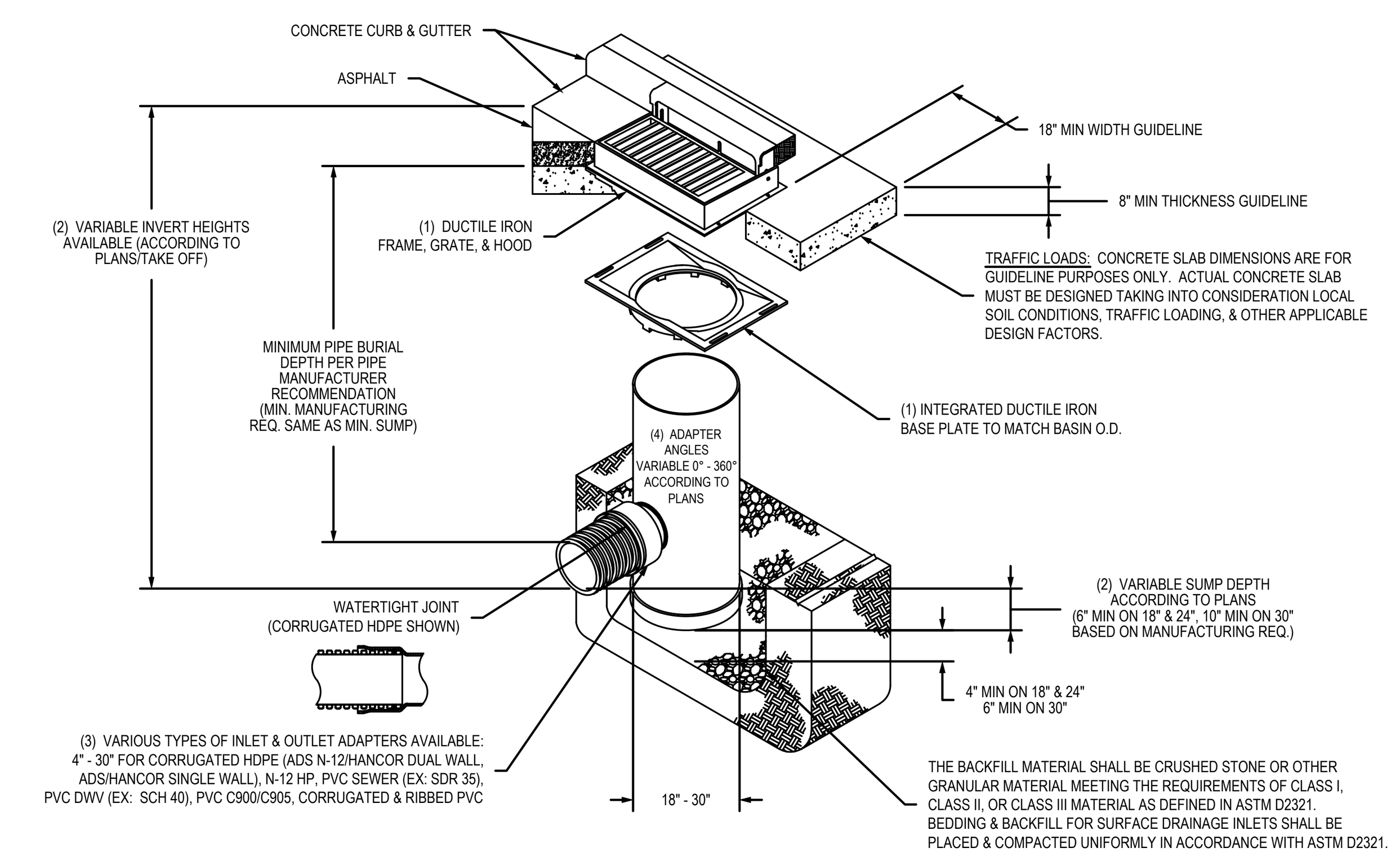

1 - 18" - 30" FRAMES, GRATES, HOODS, & BASE PLATES SHALL BE DUCTILE IRON PER ASTM A536 GRADE 70-50-05.
2 - DRAIN BASIN TO BE CUSTOM MANUFACTURED ACCORDING TO PLAN DETAILS.
3 - DRAINAGE CONNECTION STUB JOINT TIGHTNESS SHALL CONFORM TO ASTM D3212 FOR CORRUGATED HDPE (ADS N-12/HANCOR DUAL WALL), N-12 HP, & PVC SEWER (4" - 24").
4 - ADAPTERS CAN BE MOUNTED ON ANY ANGLE 0° TO 360°. TO DETERMINE MINIMUM ANGLE BETWEEN ADAPTERS SEE DRAWING NO. 7001-110-012.
5 - ALL CURB INLET GRATE OPTIONS (DIAGONAL & HIGH FLOW) SHALL MEET H-20 LOAD RATING

THIS PRINT DISCLOSES SUBJECT MATTER IN WHICH NYLOPLAST HAS PROPRIETARY RIGHTS. THE RECEIPT OR POSSESSION OF THIS PRINT DOES NOT CONFER, TRANSFER, OR LICENSE THE USE OF THE DESIGN OR TECHNICAL INFORMATION SHOWN HEREIN REPRODUCTION OF THIS PRINT OR ANY INFORMATION CONTAINED HEREIN, OR MANUFACTURE OF ANY ARTICLE HEREFROM, FOR THE DISCLOSURE TO OTHERS IS FORBIDDEN, EXCEPT BY SPECIFIC WRITTEN PERMISSION FROM NYLOPLAST. ©2013 NYLOPLAST	DRAWN BY EBC; DATE 03-22-10; REVISED BY NMH; DATE 03-10-16; DWG SIZE A	MATERIAL; PROJECT NO./NAME; SCALE 1:40 SHEET 1 OF 1	Nyloplast 3130 VERONA AVE BUFORD, GA 30518 PHN (770) 932-2443 FAX (770) 932-2490 www.nyloplast-us.com; TITLE DRAIN BASIN WITH 2 FT X 3 FT CURB INLET QUICK SPEC INSTALLATION DETAIL; DWG NO. 7002-110-087 REV C

ROAD & HIGHWAY

32 _ _ AGS _ _ X
32 _ _ AGR _ _ X

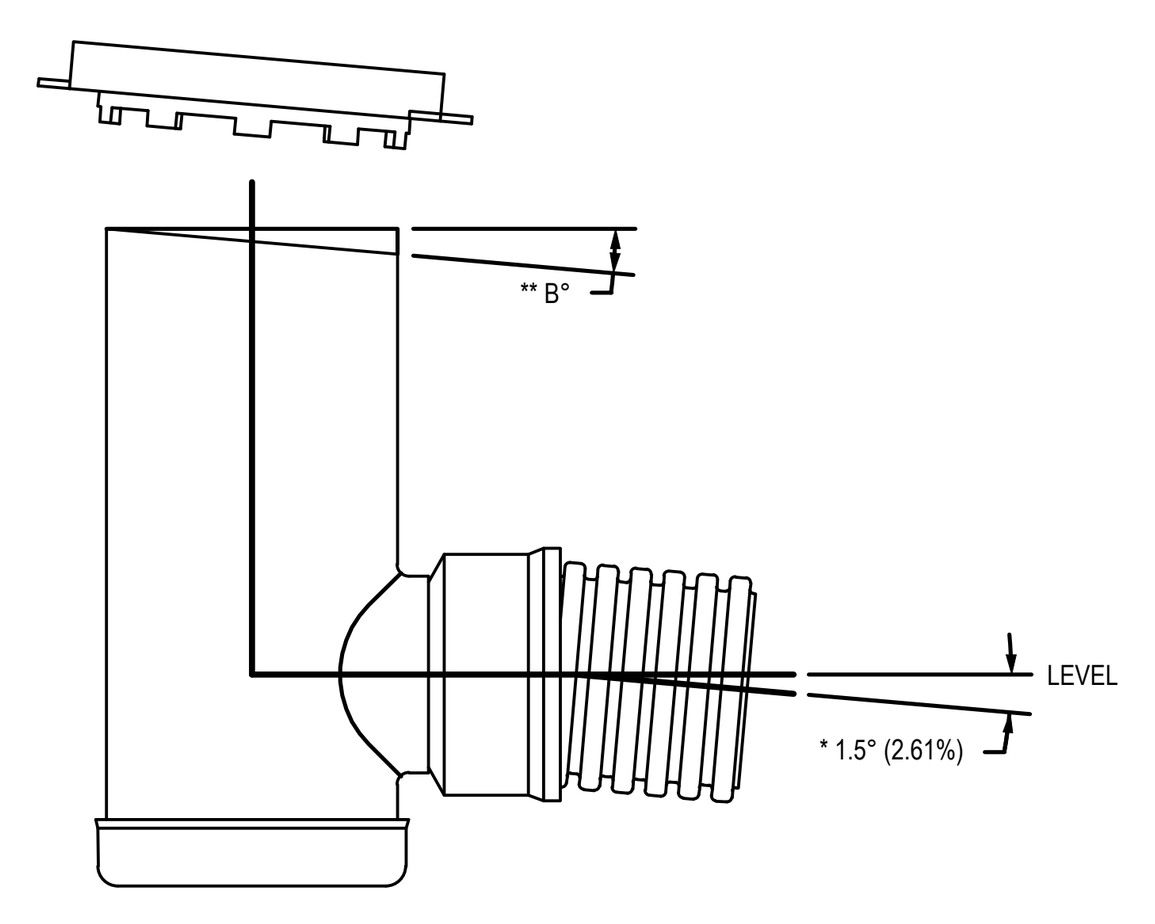

CURB INLET

30 _ _ AGS _ _ X
30 _ _ AGR _ _ X

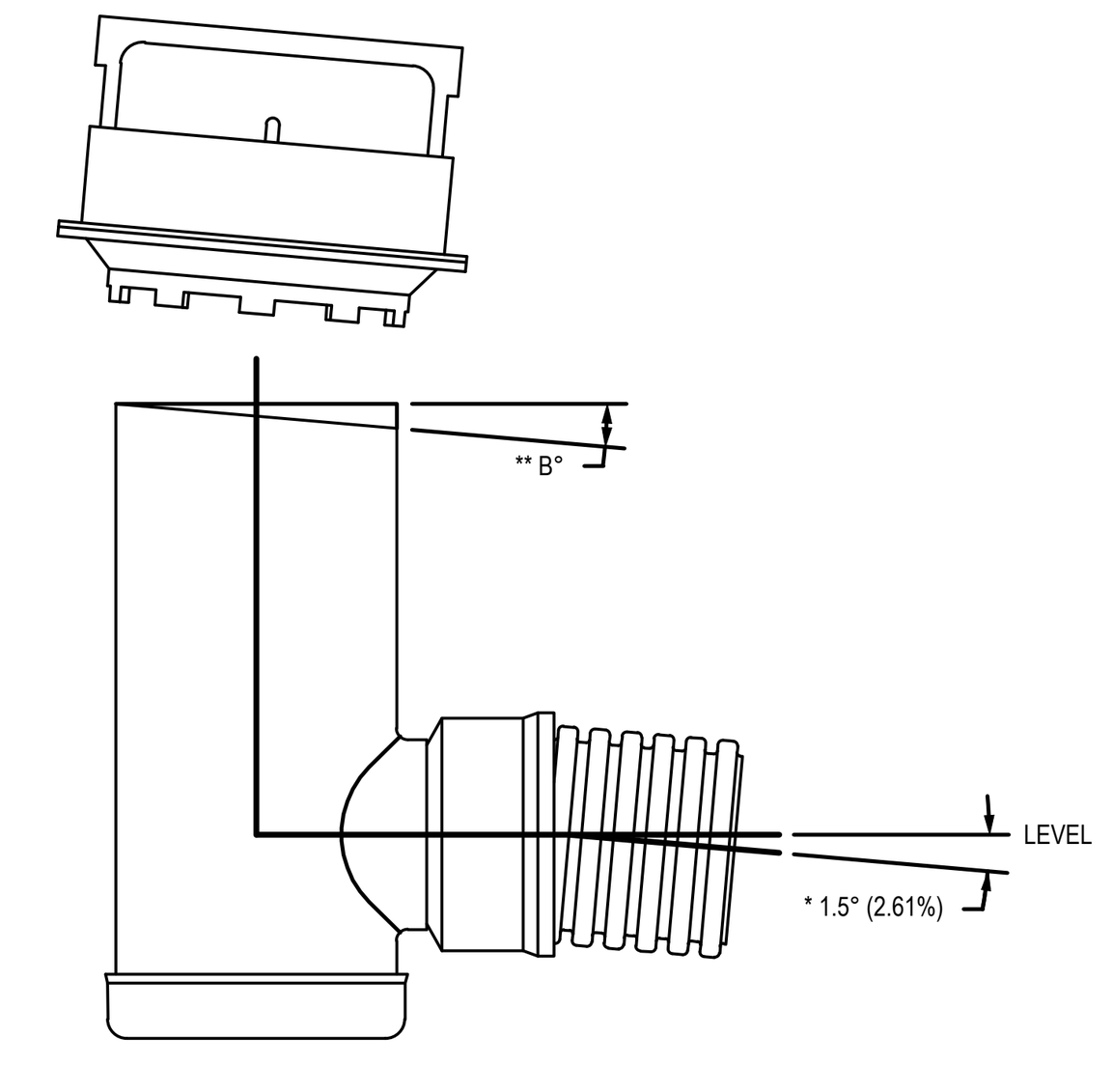

STRUCTURE SIZE	B°	B%
12"	3.15	5.50
15"	3.15	5.50
18"	3.01	5.25
24"	3.15	5.50
30"	2.86	5.00

* MAXIMUM DEFLECTION FOR 4" - 30" ADS N-12/HANCOR DUAL WALL CORRUGATED HDPE PIPE IN ANY DIRECTION

** MAXIMUM FIELD GRADE TRIM ADJUSTMENT

THIS PRINT DISCLOSES SUBJECT MATTER IN WHICH NYLOPLAST HAS PROPRIETARY RIGHTS. THE RECEIPT OR POSSESSION OF THIS PRINT DOES NOT CONFER, TRANSFER, OR LICENSE THE USE OF THE DESIGN OR TECHNICAL INFORMATION SHOWN HEREIN REPRODUCTION OF THIS PRINT OR ANY INFORMATION CONTAINED HEREIN, OR MANUFACTURE OF ANY ARTICLE HEREFROM, FOR THE DISCLOSURE TO OTHERS IS FORBIDDEN, EXCEPT BY SPECIFIC WRITTEN PERMISSION FROM NYLOPLAST. ©2013 NYLOPLAST	DRAWN BY EBC; DATE 02-05-09; REVISED BY CCA; DATE 09-04-13; DWG SIZE A	MATERIAL; PROJECT NO./NAME; SCALE 1:16 SHEET 1 OF 1	Nyloplast 3130 VERONA AVE BUFORD, GA 30518 PHN (770) 932-2443 FAX (770) 932-2490 www.nyloplast-us.com; TITLE 12 IN - 30 IN ROAD & HIGHWAY & CURB INLET FIELD ADJUSTMENTS; DWG NO. 7001-110-346 REV C

3099CGRHF & 3099CGRFH

APPROX. GRATE DRAIN AREA = 327.25 SQ IN
*APPROX. WEIGHT WITH FRAME & HOOD = 354.50 LBS

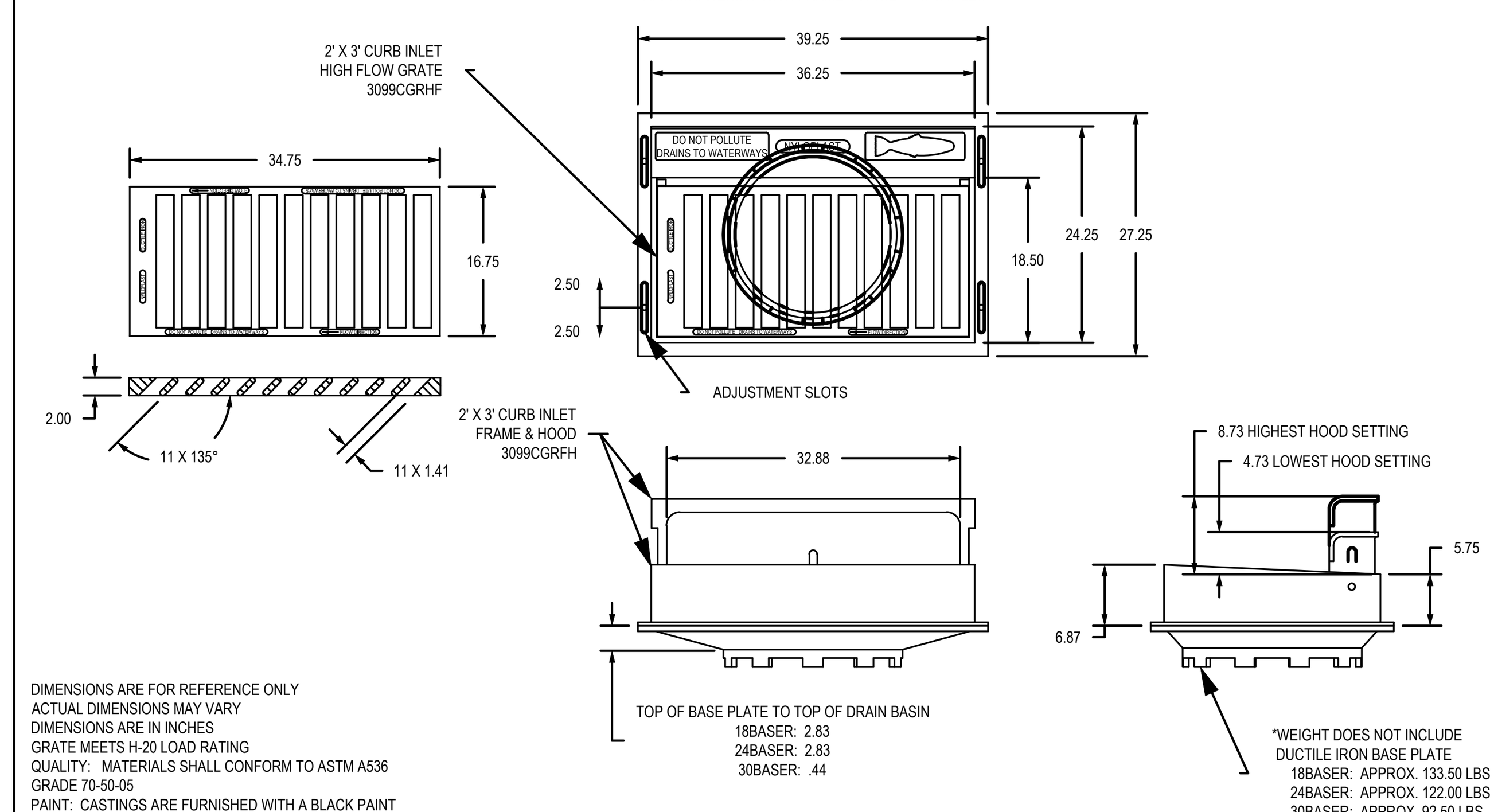

DIMENSIONS ARE FOR REFERENCE ONLY
ACTUAL DIMENSIONS MAY VARY
DIMENSIONS ARE IN INCHES
GRATE MEETS H-20 LOAD RATING
QUALITY: MATERIALS SHALL CONFORM TO ASTM A536 GRADE 70-50-05
PAINT: CASTINGS ARE FURNISHED WITH A BLACK PAINT
LOCKING DEVICE AVAILABLE UPON REQUEST SEE DRAWING NO. 7002-110-058
SLOPE OF GRATE SURFACE IS 5.2%
CURB INLET FRAME INSIDE VOLUME IS APPROX 2.73 CU FT
APPROX. DRAIN AREA OF GRATE & HOOD
LOWEST SETTING = 463.92 SQ IN
LOWEST + 1" SETTING = 496.79 SQ IN
LOWEST + 2" SETTING = 529.67 SQ IN
LOWEST + 3" SETTING = 562.54 SQ IN
HIGHEST SETTING = 595.42 SQ IN

THIS PRINT DISCLOSES SUBJECT MATTER IN WHICH NYLOPLAST HAS PROPRIETARY RIGHTS. THE RECEIPT OR POSSESSION OF THIS PRINT DOES NOT CONFER, TRANSFER, OR LICENSE THE USE OF THE DESIGN OR TECHNICAL INFORMATION SHOWN HEREIN REPRODUCTION OF THIS PRINT OR ANY INFORMATION CONTAINED HEREIN, OR MANUFACTURE OF ANY ARTICLE HEREFROM, FOR THE DISCLOSURE TO OTHERS IS FORBIDDEN, EXCEPT BY SPECIFIC WRITTEN PERMISSION FROM NYLOPLAST. ©2013 NYLOPLAST	DRAWN BY EBC; DATE 04-10-06; REVISED BY CCA; DATE 09-05-13; DWG SIZE A	MATERIAL DUCTILE IRON; PROJECT NO./NAME; SCALE 1:16 SHEET 1 OF 1	Nyloplast 3130 VERONA AVE BUFORD, GA 30518 PHN (770) 932-2443 FAX (770) 932-2490 www.nyloplast-us.com; TITLE 2 FT X 3 FT CURB INLET HIGH FLOW GRATE ASSEMBLY; DWG NO. 7002-110-047 REV D

1 / C8.8 NYLOPLAST COMBINATION CURB GRATE INLET (CCG)
NOT TO SCALE

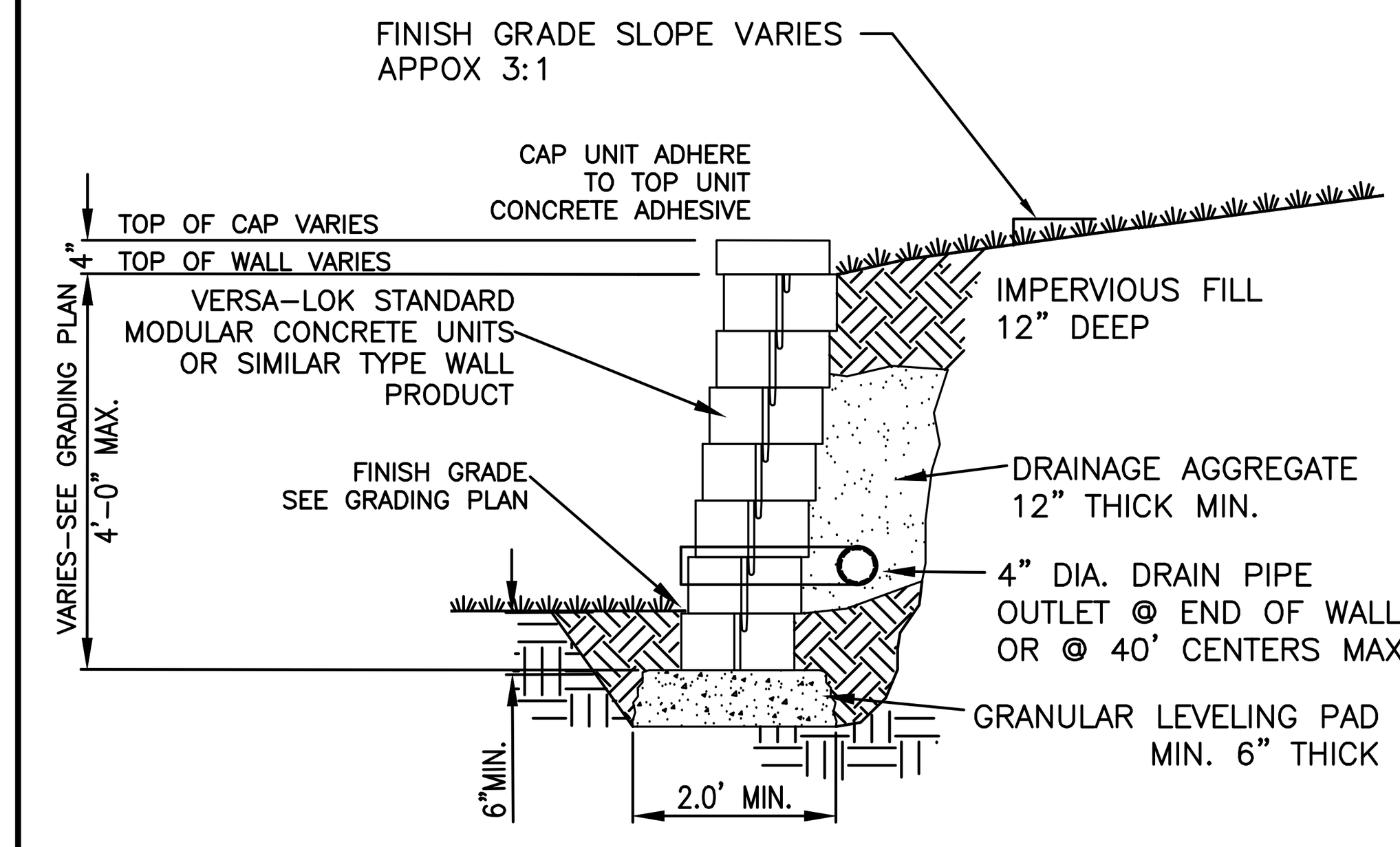

3 / C8.8 MODULAR RETAINING WALL
NOT TO SCALE

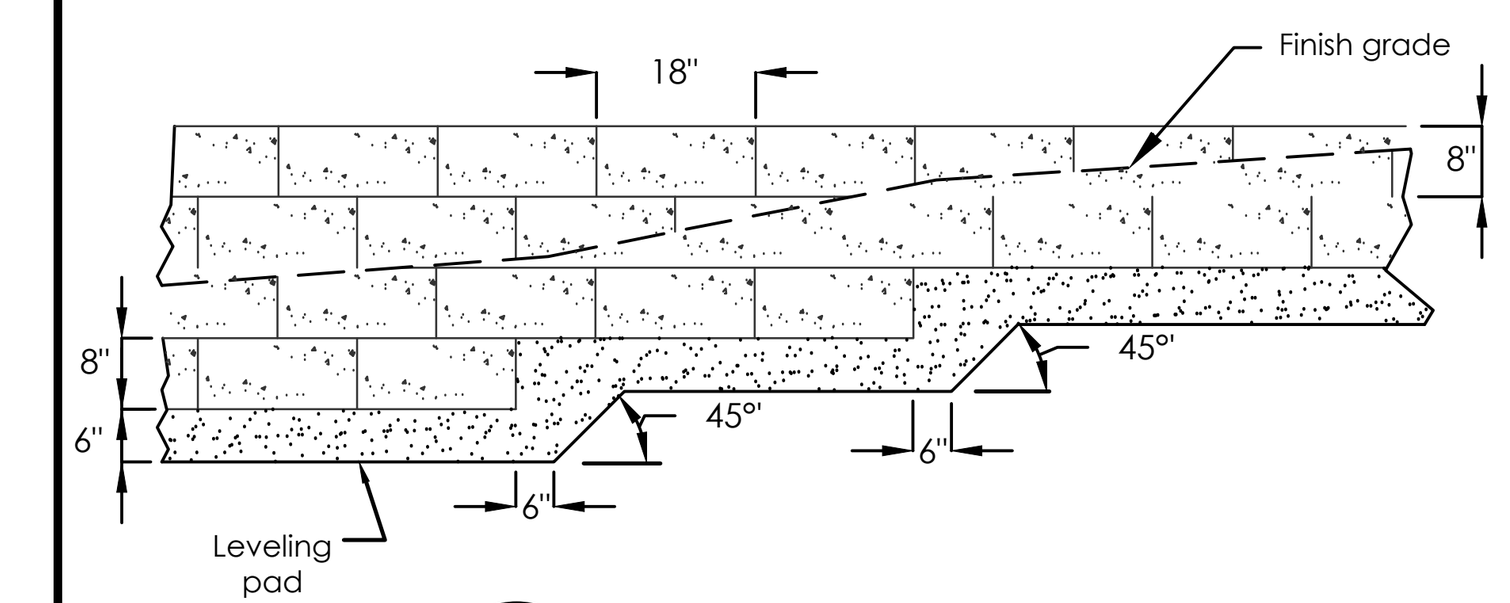

9 / C8.8 LEVELING PAD STEP DETAIL
NOT TO SCALE

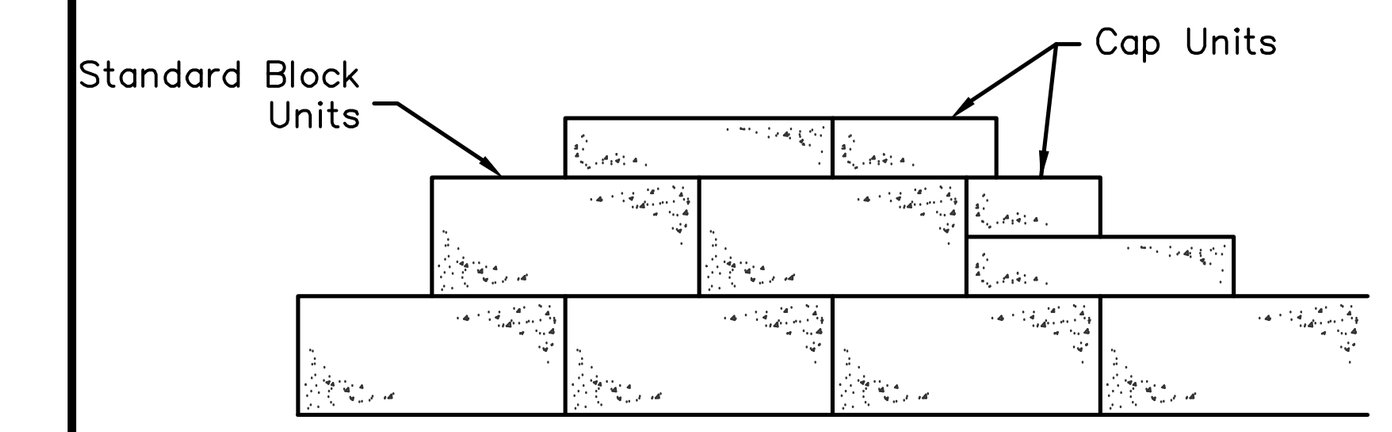

8 / C8.8 CAP STEP DETAIL
NOT TO SCALE

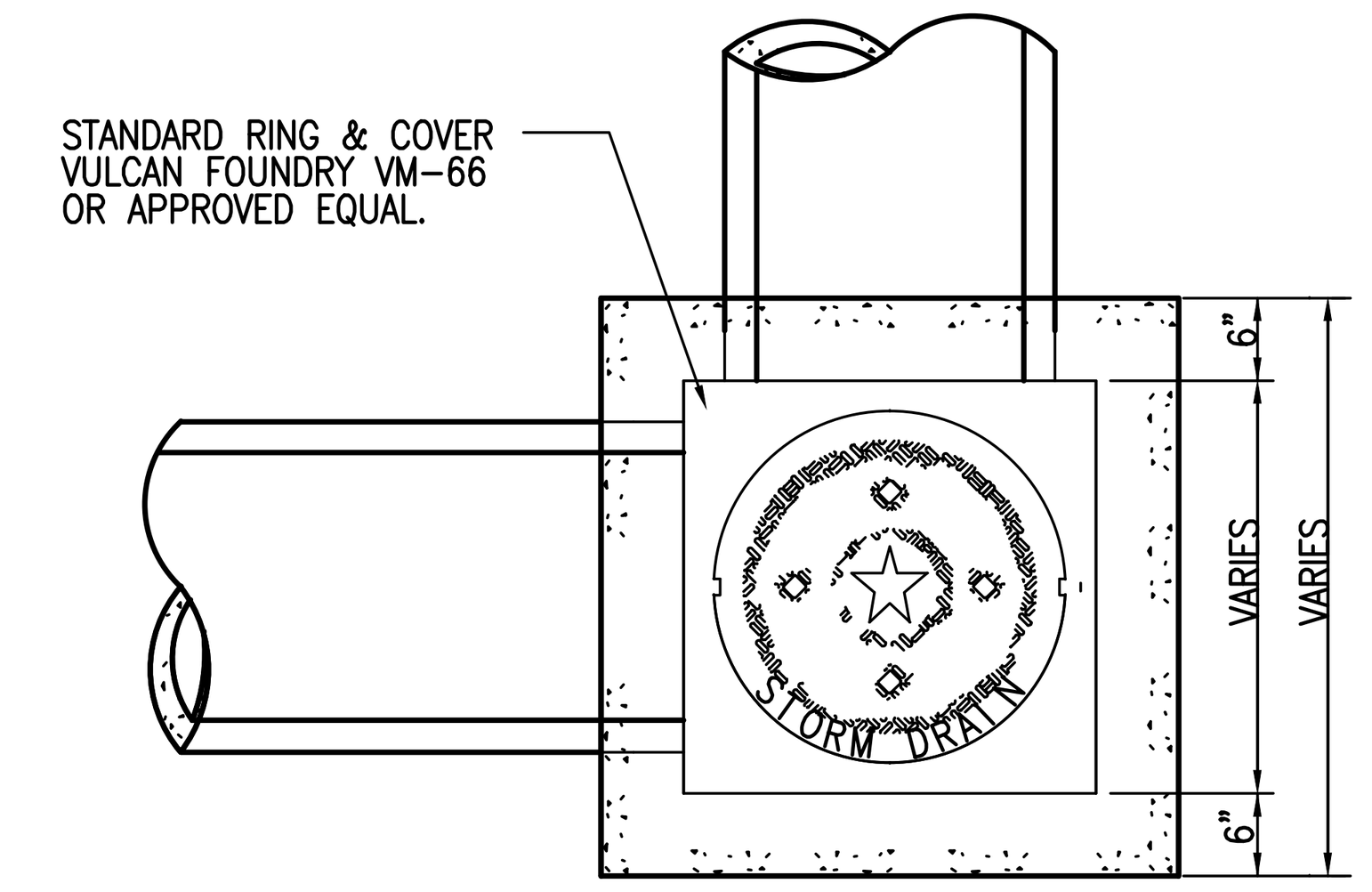

PLAN

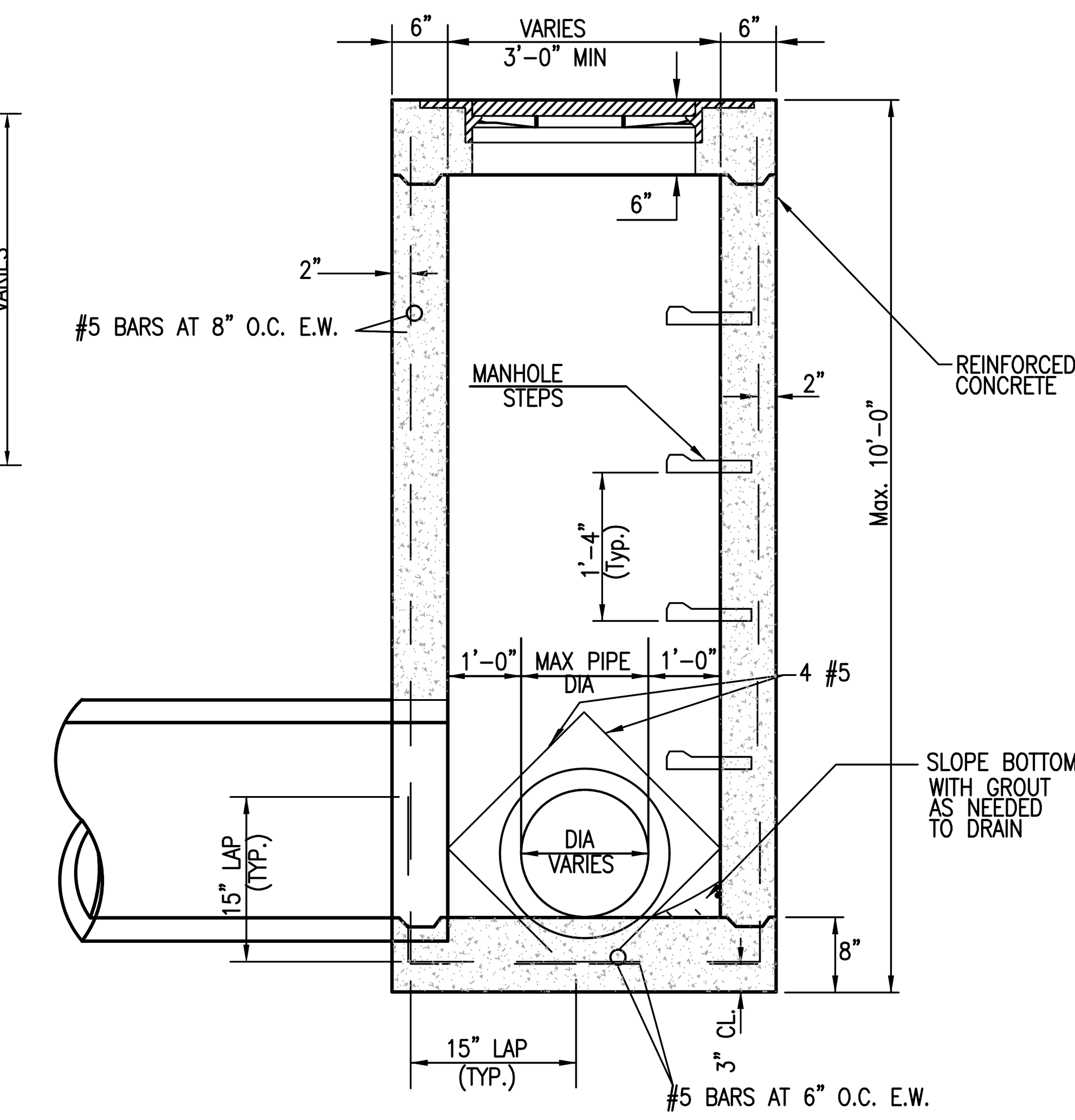

SECTION

GENERAL NOTES

1. MINIMUM INTERIOR SIZE OF BOX IS 3'-0" X 3'-0".
2. MAXIMUM INTERIOR SIZE OF BOX IS 4'-0" X 4'-0" FOR 12" TO 24" PIPES.
3. MAXIMUM HEIGHT OF BOX IS 10'-0". SPECIAL DESIGN REQUIRED FOR GREATER HEIGHT.
4. ALL CONCRETE SHALL BE 3,000 PSI, 28 DAY COMPRESSIVE STRENGTH.
5. ALL REINFORCEMENT SHALL BE DEFORMED BAR, GRADE 60.
6. STEPS ARE REQUIRED ON ALL BOXES WHEN DIMENSION FROM BOTTOM SLAB FLOW LINE TO TOP OF TOP SLAB IS GREATER THAN 4'-0".

4 / C8.8 JUNCTION BOX DETAIL
NOT TO SCALE

NOTE:
COVER AND FRAME SHALL CONFORM TO THE REQUIREMENTS OF CLASS 30 FOR GRAY IRON CASTING. ASTM (A 48) FRAME B COVER SHALL BE CERTIFIED BY MFG. TO BE TRAFFIC BEARING WHEN APPLICABLE.

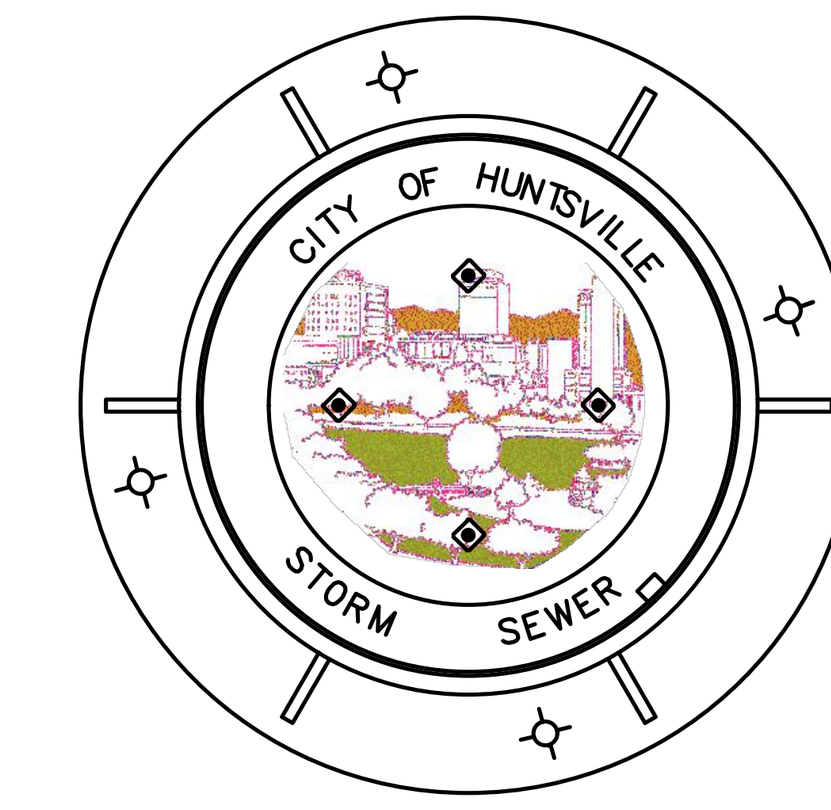

COVER DETAIL

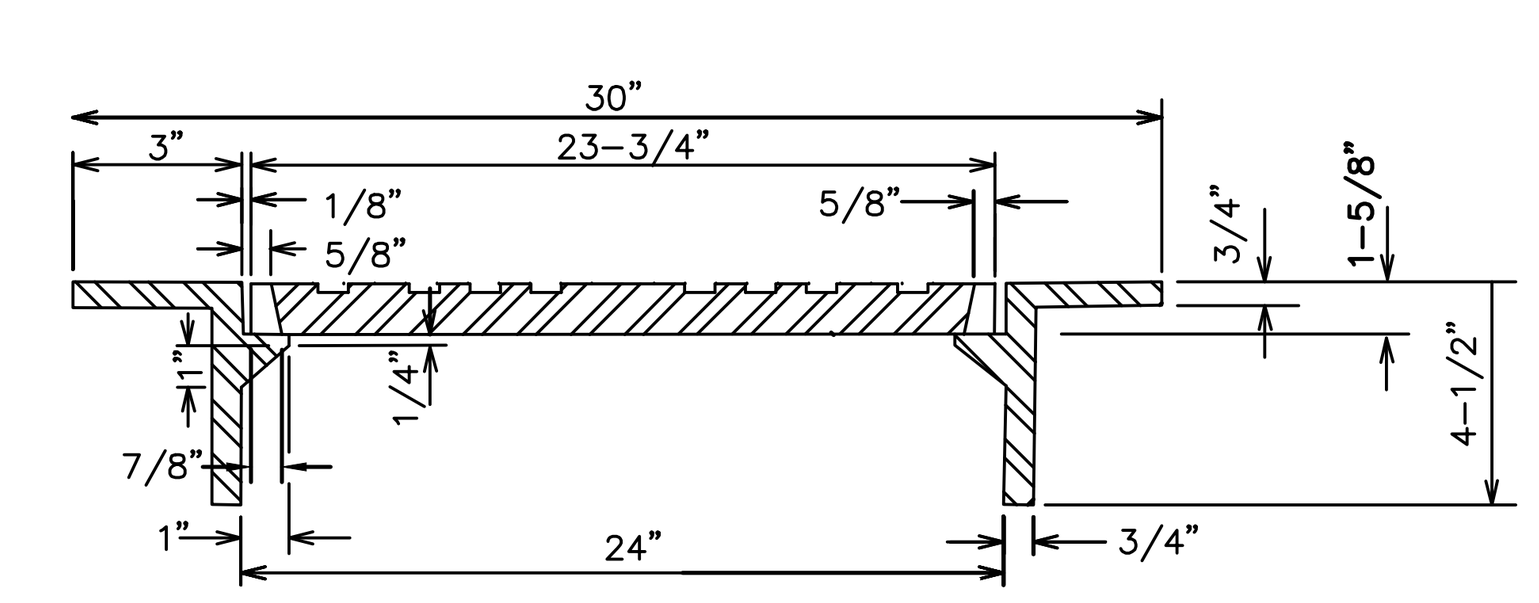

SECTION

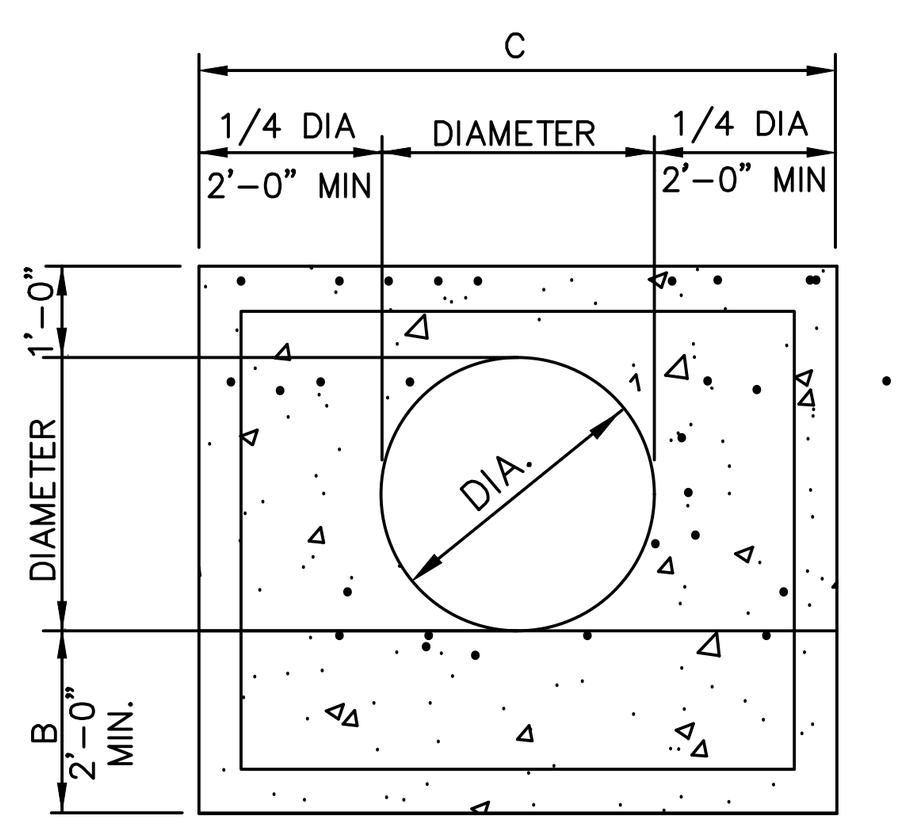

ELEVATION OF ROUND PIPE HEADWALL

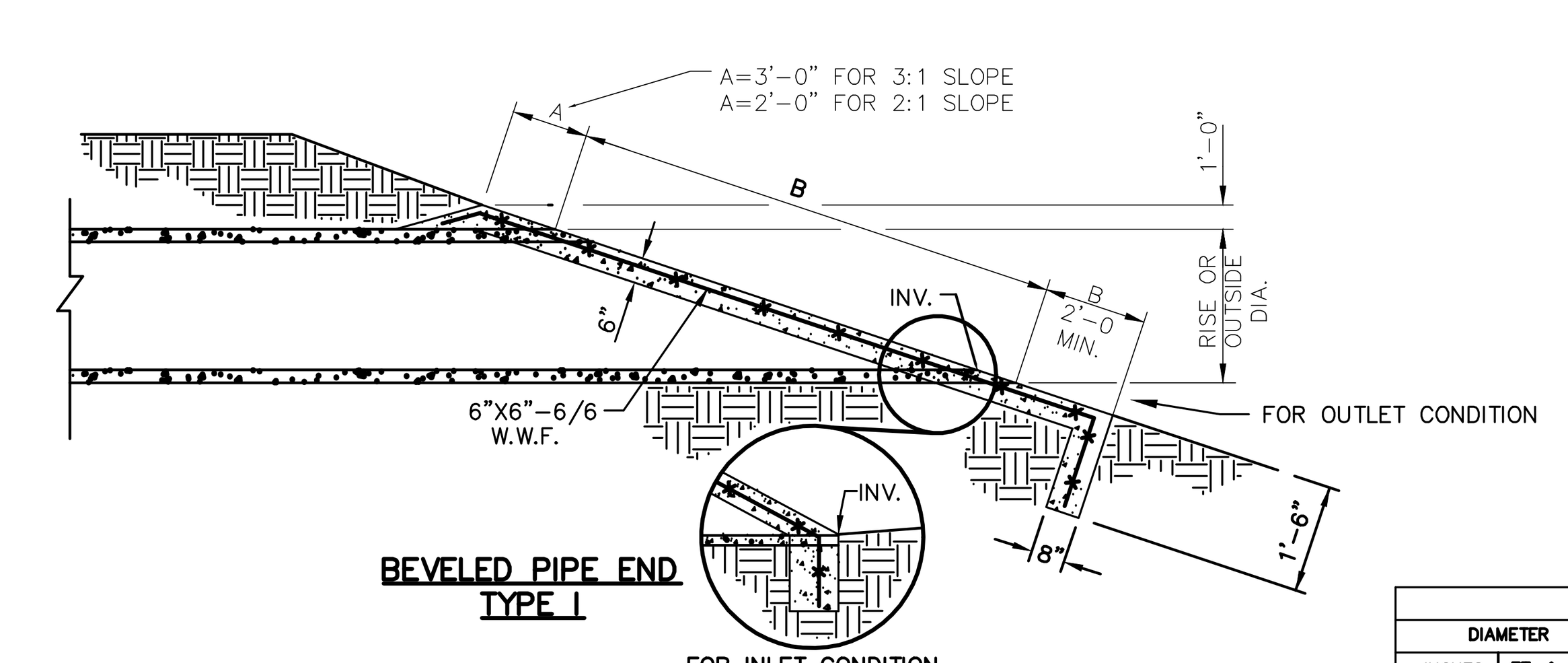

BEVELED PIPE END TYPE I

GENERAL NOTES:

1. THIS HEADWALL IS NOT DESIGNED TO OFFER ANY SUPPORT TO THE PIPE. THE FILL IS TO BE PLACED AND ALL SHORING REMOVED BEFORE THE SLOPE PAVING IS PLACED.
2. ALL SLOPE PAVING SHALL CONFORM TO THE CURRENT ALABAMA DEPARTMENT OF TRANSPORTATION STANDARD SPECIFICATIONS.
3. QUANTITIES SHOWN INCLUDE TWO SLOPE PAVED WALLS AND TWO TOE WALLS.
4. CONTRACTOR SHALL INSURE THROUGH MECHANICAL MEANS OR OTHER APPROVED DEVICES THAT CONNECTION BETWEEN BEVELED PIPE END AND CONCRETE WILL NOT BE DETACHED.
5. CONCRETE SHALL BE CLASS "A" WITH A MINIMUM 28 DAY STRENGTH OF 3000 P.S.I.
6. PROVIDE 6" x 6" – 6/6 GAGE WELDED WIRE FABRIC FOR PIPES LARGER THAN 36" OR EQUIVALENT.
7. RIPRAP SHALL BE UNIFORM SIZE THROUGHOUT, AND AT LEAST 6" THICK AT THE SMALLEST DIMENSION.

DIMENSIONS FOR ROUND PIPE

DIAMETER		OPEN AREA	2 TO 1 SLOPE			3 TO 1 SLOPE		
INCHES	FT. & IN.		B	C	D	B	C	D
8"	0'-8"	0.4	1'-6"	4'-8"	1'-0"	2'-2"	4'-8"	1'-0"
10"	0'-10"	0.5	1'-11"	4'-10"	1'-3"	2'-8"	4'-10"	1'-3"
12"	1'-0"	0.8	2'-5"	5'-0"	1'-6"	3'-2"	5'-0"	1'-6"
15"	1'-3"	1.2	2'-10"	5'-3"	1'-11"	4'-0"	5'-3"	1'-11"
18"	1'-6"	1.8	3'-3"	5'-6"	2'-3"	4'-9"	5'-6"	2'-3"
21"	1'-9"	2.4	3'-11"	5'-9"	2'-7 1/2"	5'-7"	5'-9"	2'-7 1/2"
24"	2'-0"	3.1	4'-6"	6'-0"	3'-0"	6'-4"	6'-0"	3'-0"
30"	2'-6"	4.9	5'-3"	6'-6"	3'-9"			
36"	3'-0"	7.1	6'-9"	7'-0"	4'-6"			
42"	3'-6"	9.6	7'-0"	7'-6"	5'-3"			
48"	4'-0"	12.6	9'-0"	8'-0"	6'-0"			
54"	4'-6"	15.9	10'-1"	8'-6"	6'-9"			
60"	5'-0"	19.6	11'-3"	9'-0"	7'-6"			

2 / C8.8 SLOPE PAVED HEADWALL
NOT TO SCALE

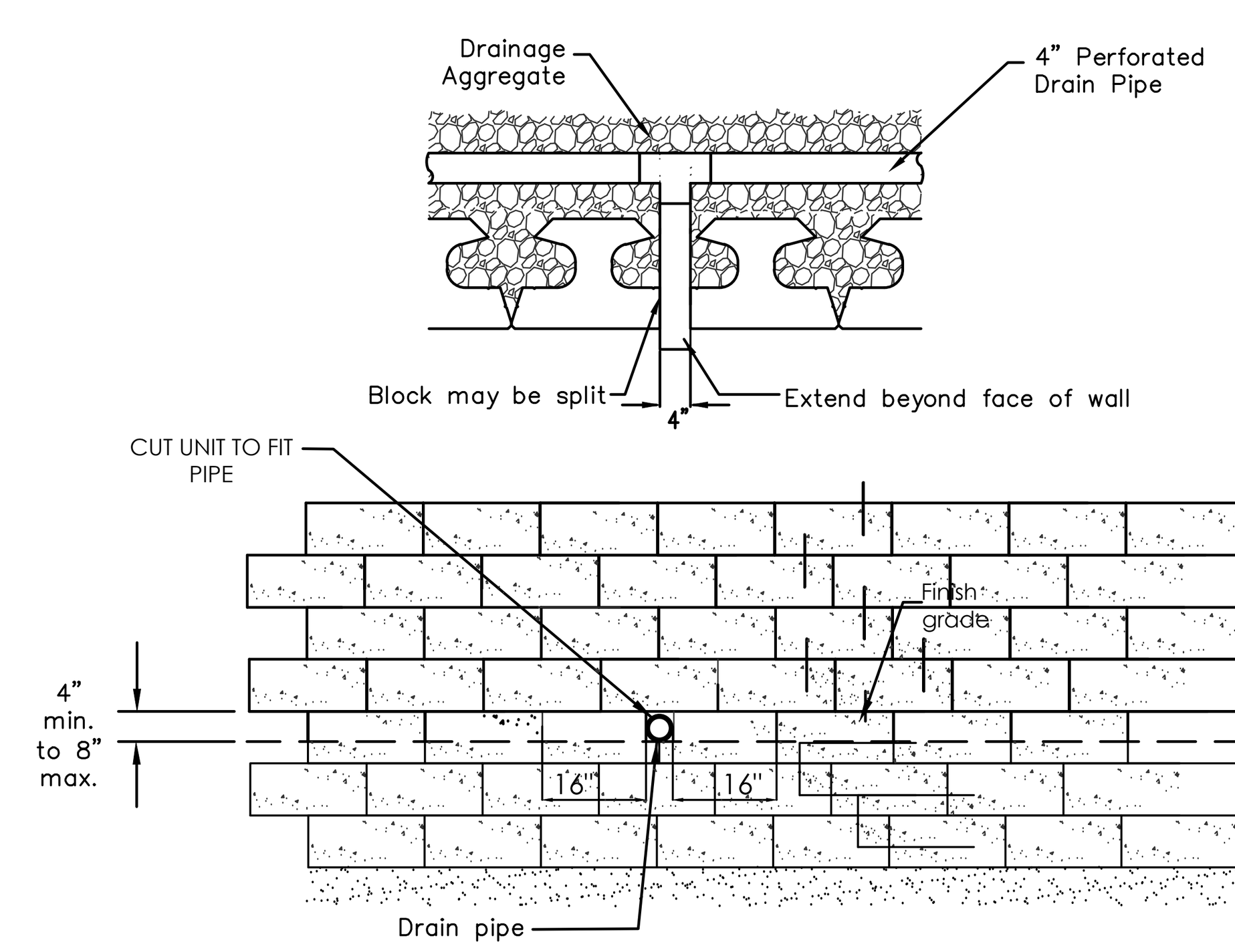

Note: Locate drain tile at lowest elevation above adjacent finish grade.

7 / C8.8 DRAIN TILE OUTLET
NOT TO SCALE

JOHNSON & ASSOCIATES ENGINEERING SURVEYING
1218 CHURCH STREET HUNTSVILLE, ALABAMA 35801
1-256-533-7331 FAX 1-256-533-7332

REVISIONS

no.	date	description

SEAL: ALABAMA NO. 16165 PROFESSIONAL ENGINEER STEPHEN L. WALKER 02/14/2022

PHASE II - ROAD IMPROVEMENTS, PARKING LOT REPAIRS
ALABAMA A&M UNIVERSITY

Charles Williams & Associates, Inc ARCHITECTS
3601 8TH AVE. SOUTH
BIRMINGHAM, ALABAMA 35222
PH: 205-250-0700
FAX: 205-250-0515

SHEET TITLE: CONSTRUCTION DETAILS
PROJECT NUMBER: CWA 2019-06B JA 1791EN
DATE: 02-14-2022
DRAWN BY: ATC/RDH
CHECKED BY: SW/ATC

SHEET NUMBER C8.8