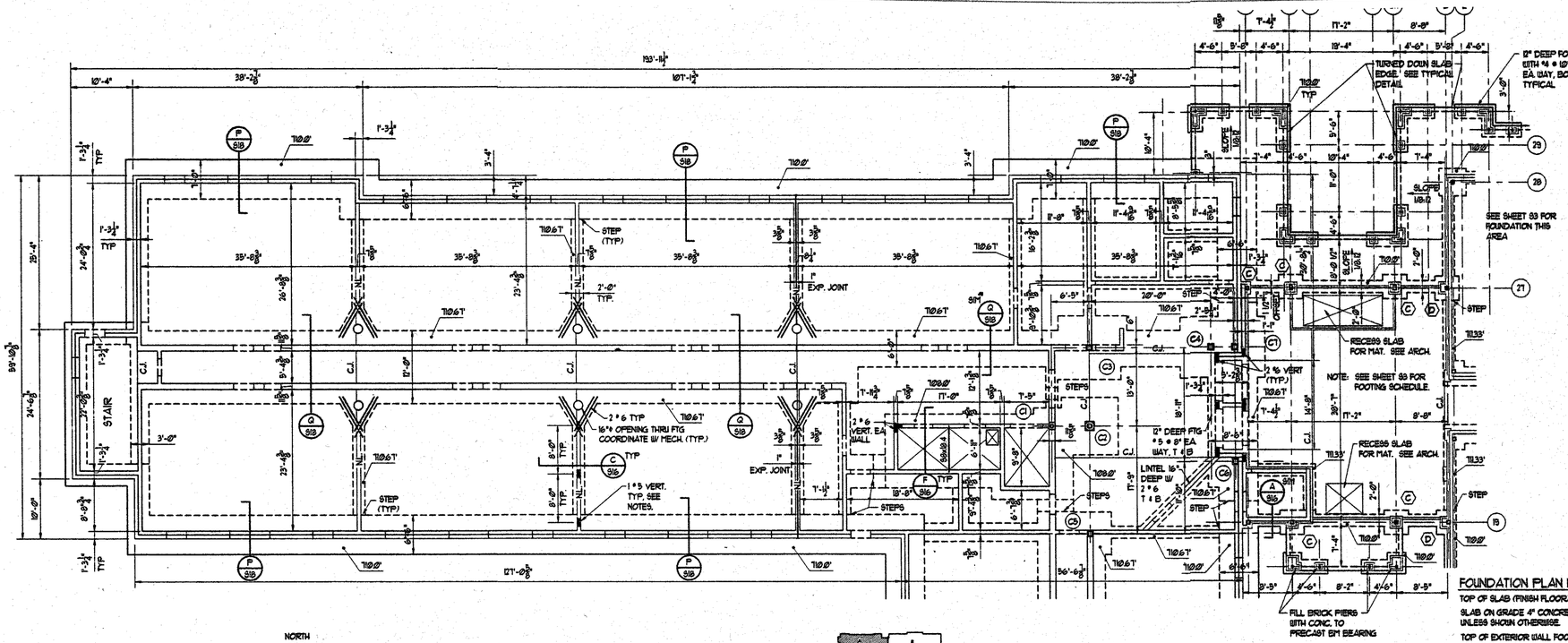

NORTH

FIRST FLOOR/FOUNDATION PLAN - PART A

SCALE 1/8" = 1'-0"

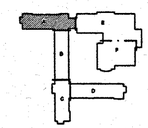

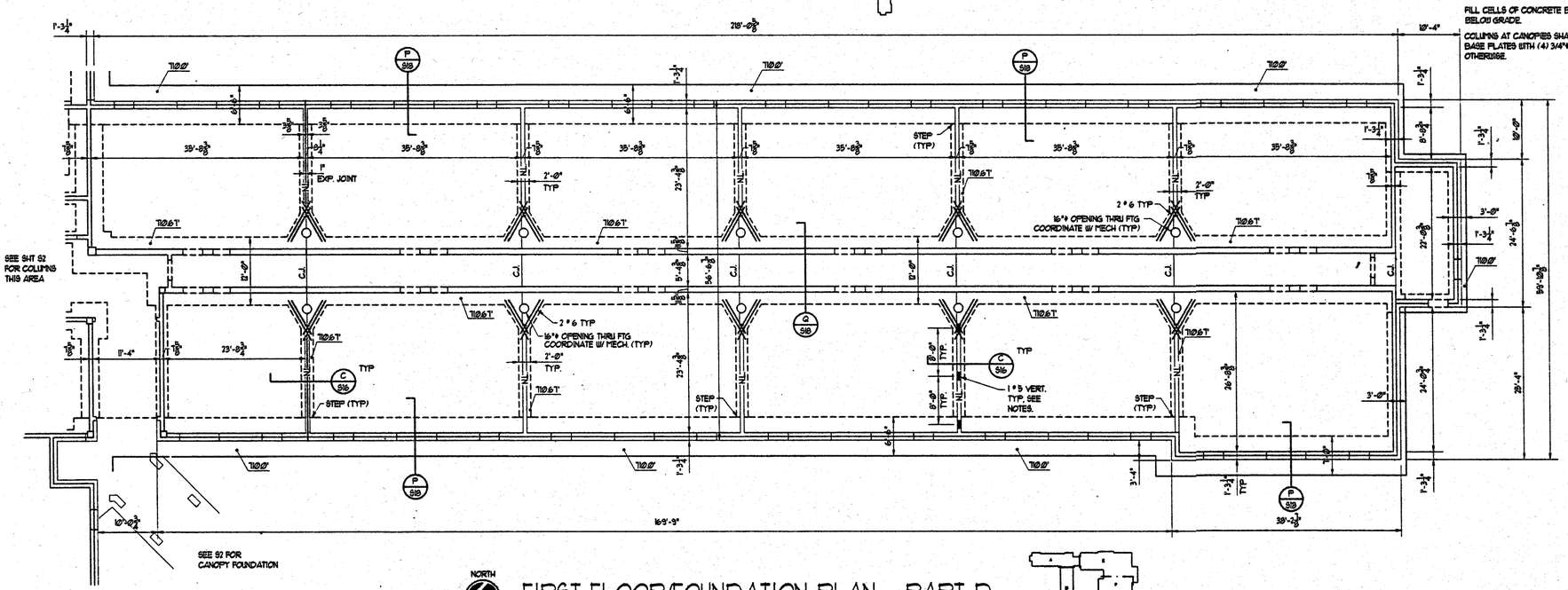

NORTH

FIRST FLOOR/FOUNDATION PLAN - PART D

SCALE: 1/8" = 1'-0"

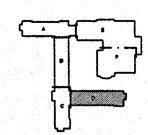

TYPICAL WALL REINFORCING

1. ALL BEARING WALLS (ALL WALLS EXCEPT THOSE NOTED AS NL = NONLOADBEARING WALLS) 3RD FLR TO ROOF: #5 @ 48" O.C. 2ND FLR TO 3RD FLR: #5 @ 16" O.C. 1ST FLR TO 2ND FLR: #5 @ 8" O.C. AND AS NOTED ON PLANS.
2. ALL NONLOADBEARING WALLS SHALL BE REINFORCED WITH 1 #5 VERTICAL FULL HEIGHT AT 8'-0" O.C., STARTING ADJACENT TO OPENINGS. SEE PLAN FOR EXAMPLE.
3. ALL LOADBEARING MASONRY WALLS SHALL HAVE A CONTINUOUS 8" DEEP BOND BEAM REINFORCED WITH 2 #5 AT 9'-4" ABOVE EACH FLOOR LEVEL. BOND BEAM REINFORCING SHALL BE CONTINUOUS. IF BOND BEAM CONFLICTS WITH LINTELS, EXTEND BOND BEAM REINFORCING THROUGH LINTELS.
4. ALL JAMBS IN LOADBEARING WALLS SHALL HAVE 2 #5 VERTICAL REINFORCING.

NOTE: ALL CELLS OF MASONRY WITH REINFORCING SHALL BE FILLED. ALL WALLS LESS THAN 4'-0" BETWEEN OPENINGS SHALL BE FILLED.

FOUNDATION PLAN NOTES:

TOP OF SLAB (FINISH FLOOR) ELEVATION 710.0' UNLESS SHOWN OTHERWISE.

SLAB ON GRADE 4" CONCRETE, REINFORCED WITH 6x6 W4.0/W4.0 WWF, UNLESS SHOWN OTHERWISE.

TOP OF EXTERIOR WALL FOOTINGS 24" BELOW FINISH FLOOR, UNLESS SHOWN OTHERWISE.

TOP OF INTERIOR WALL FOOTINGS 16" BELOW FINISH FLOOR, EXCEPT AS SHOWN OTHERWISE.

FOOTING ELEVATIONS ARE SHOWN TO TOP OF FOOTINGS.

WALL FOOTINGS TO BE AT LEAST 12" WIDER THAN SUPPORTED WALL WIDTH, UNLESS SHOWN OTHERWISE. FOOTINGS TO BE CENTERED UNDER WALL.

FILL CELLS OF CONCRETE BLOCK FOUNDATION WALLS WITH CONCRETE BELOW GRADE.

COLUMNS AT CANOPIES SHALL BE 3"# STD PIPE WITH 3/4"x10"x10" BASE PLATES WITH (4) 3/4"#x12" ANCHOR BOLTS, UNLESS NOTED OTHERWISE.

STATE OF ALABAMA REGISTERED ARCHITECT ROBERT H. HOBBY

ALABAMA REGISTERED ROBERT H. HOBBY

WEST CAMPUS LIVING/LEARNING COMPLEX
ALABAMA A&M UNIVERSITY

SMITH, KRANERT, TOMBLIN & ASSOCIATES
A. I. A.
ARCHITECTS, P.C.
FLORENCE HUNTSVILLE ALABAMA

JOB NUMBER

DRAWN BY: | CHECKED BY: | DATE: 8-23-99

REVISED

SHEET TITLE

FOUNDATION PLAN PARTS A & D

SHEET NUMBER

S1 OF 23

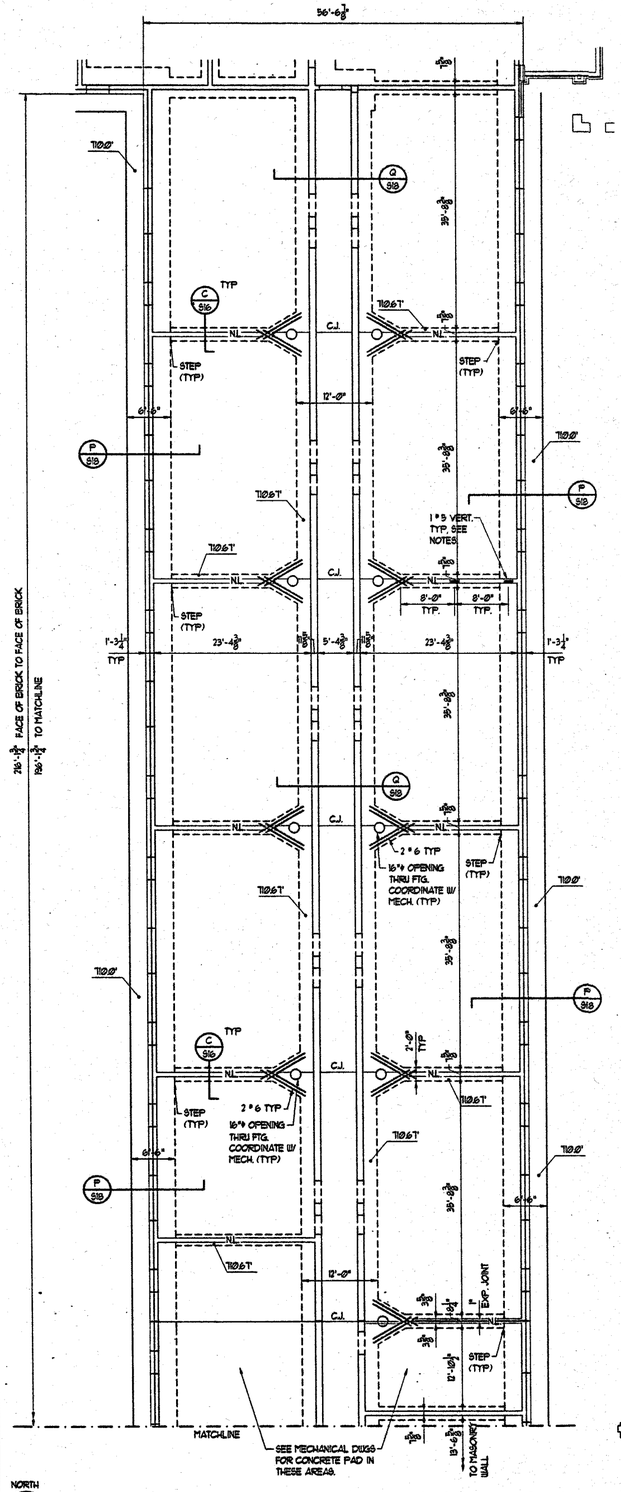

FIRST FLOOR/FOUNDATION PLAN - PART B

SCALE: 1/8" = 1'-0"

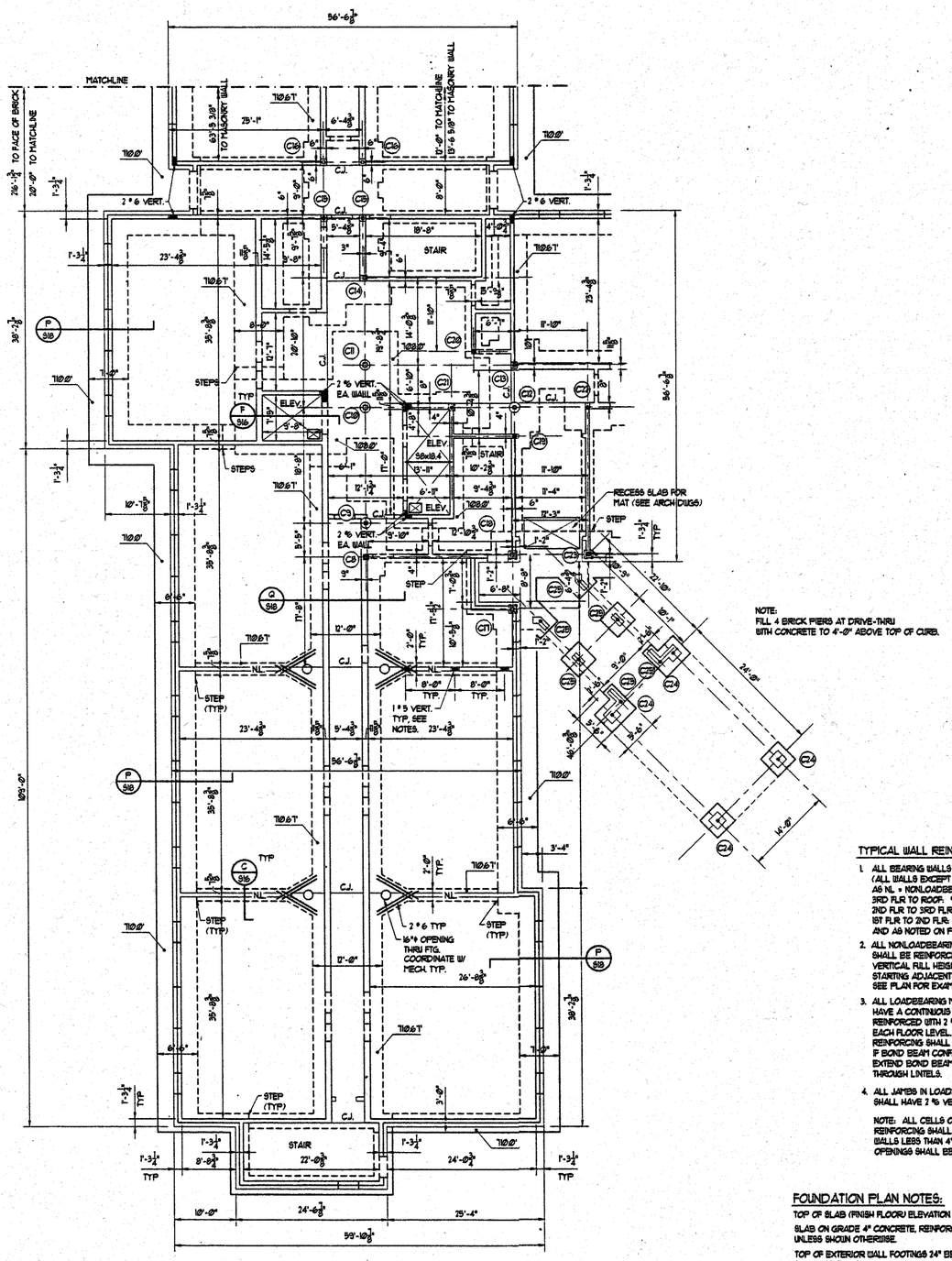

FIRST FLOOR/FOUNDATION PLAN - PART C

SCALE: 1/8" = 1'-0"

NOTE:
FILL 4 BRICK PIERS AT DRIVE-THRU WITH CONCRETE TO 4'-0" ABOVE TOP OF CURB.

TYPICAL WALL REINFORCING

1. ALL BEARING WALLS
   (ALL WALLS EXCEPT THOSE NOTED AS NL = NONLOADBEARING WALLS)
   3RD FLR TO ROOF: #5 @ 48" O.C.
   2ND FLR TO 3RD FLR: #5 @ 16" O.C.
   1ST FLR TO 2ND FLR: #5 @ 8" O.C.
   AND AS NOTED ON PLANS.
2. ALL NONLOADBEARING WALLS SHALL BE REINFORCED WITH 1 #5 VERTICAL BILL HEIGHT AT 8'-0" O.C., STARTING ADJACENT TO OPENINGS. SEE PLAN FOR EXAMPLE.
3. ALL LOADBEARING MASONRY WALLS SHALL HAVE A CONTINUOUS 8" DEEP BOND BEAM REINFORCED WITH 2 #5 AT 9'-4" ABOVE EACH FLOOR LEVEL. BOND BEAM REINFORCING SHALL BE CONTINUOUS. IF BOND BEAM CONFLICTS WITH LINTELS, EXTEND BOND BEAM REINFORCING THROUGH LINTELS.
4. ALL JAMBS IN LOADBEARING WALLS SHALL HAVE 2 #5 VERTICAL REINFORCING.

NOTE: ALL CELLS OF MASONRY WITH REINFORCING SHALL BE FILLED. ALL WALLS LESS THAN 4'-0" BETWEEN OPENINGS SHALL BE FILLED.

FOUNDATION PLAN NOTES:

TOP OF SLAB (FINISH FLOOR) ELEVATION "110.0" UNLESS SHOWN OTHERWISE.

SLAB ON GRADE 4" CONCRETE, REINFORCED WITH 6x6 W4/W4 WWF, UNLESS SHOWN OTHERWISE.

TOP OF EXTERIOR WALL FOOTINGS 24" BELOW FINISH FLOOR, UNLESS SHOWN OTHERWISE.

TOP OF INTERIOR WALL FOOTINGS 16" BELOW FINISH FLOOR, EXCEPT AS SHOWN OTHERWISE.

FOOTING ELEVATIONS ARE SHOWN TO TOP OF FOOTINGS.

WALL FOOTINGS TO BE AT LEAST 12" WIDER THAN SUPPORTED WALL WIDTH, UNLESS SHOWN OTHERWISE. FOOTINGS TO BE CENTERED UNDER WALL.

FILL CELLS OF CONCRETE BLOCK FOUNDATION WALLS WITH CONCRETE BELOW GRADE.

COLUMNS AT CANOPIES SHALL BE 3"ø STD PIPE WITH 3/4"x12"x12" BASE PLATES WITH (4) 3/4"øx12" ANCHOR BOLTS, UNLESS NOTED OTHERWISE.

STATE OF ALABAMA REGISTERED ARCHITECTS

ALABAMA REGISTERED ENGINEER No. 10452 Power & Signal ROBERT H. HODNETT

WEST CAMPUS LIVING/LEARNING COMPLEX
ALABAMA A&M UNIVERSITY

SMITH, KRANERT, TOMBLIN & ASSOCIATES
ARCHITECTS, P.C.
FLORENCE A. L. A. HUNTSVILLE ALABAMA

JOB NUMBER

MSH | RHH | 8-21-99
DRAWN BY | CHECKED BY | DATE

REVISED

SHEET TITLE
FOUNDATION PLAN PARTS A & C

SHEET NUMBER
S2
OF
23

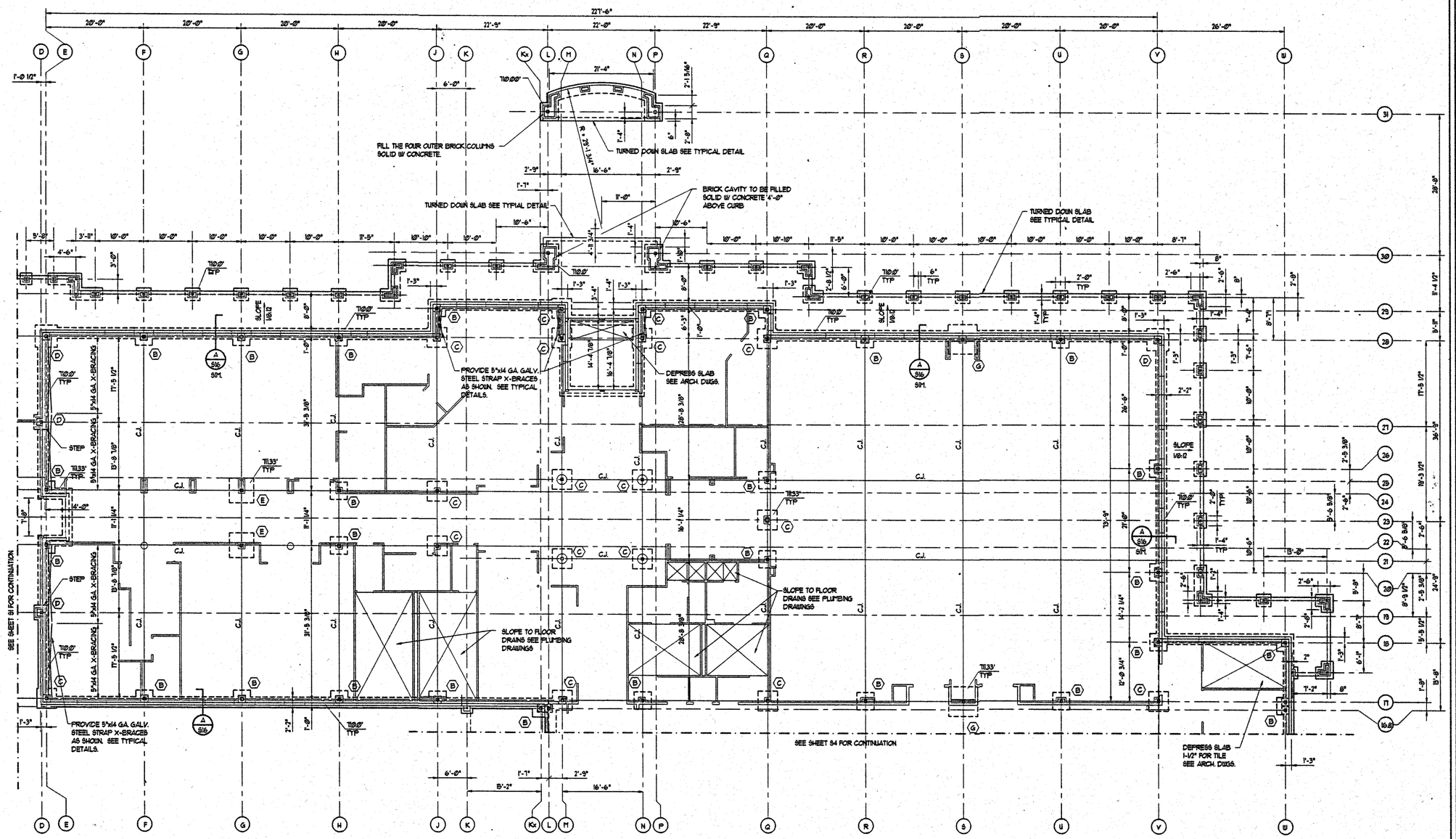

FOUNDATION PLAN - PART E

SCALE: 1/8"=1'-0"

TOP OF SLAB (FINISHED FLOOR) ELEVATION 110.0' EXCEPT AS SHOWN OTHERWISE.

SLAB ON GRADE 4" CONCRETE, REINFORCED WITH 6x6 W1.4/W1.4 WIF, UNLESS SHOWN OTHERWISE.

TOP OF EXTERIOR WALL FOOTINGS 24" BELOW FINISHED FLOOR, OR 12" MINIMUM BELOW FINISHED GRADE, WHICHEVER IS LOWER, UNLESS SHOWN OTHERWISE.

TOP OF INTERIOR WALL FOOTINGS 8" BELOW FINISHED FLOOR EXCEPT AS SHOWN OTHERWISE.

FOOTING ELEVATIONS ARE SHOWN TO TOP OF FOOTINGS.

WALL FOOTINGS TO BE AT LEAST 12" WIDER THAN SUPPORTED WALL, UNLESS SHOWN OTHERWISE. FOOTING TO BE CENTERED UNDER WALL.

FILL CELLS OF CONCRETE BLOCK FOUNDATION WALLS WITH CONCRETE BELOW GRADE.

CANOPY SUPPORT COLUMNS SHALL BE 3"ø STD PIPE WITH 3/4"x12x12 BASE PLATE AND (4) 3/4" DIA. x 12" ANCHOR BOLTS, UNLESS NOTED OTHERWISE.

COORDINATE LOCATION OF CONTROL JOINTS WITH FLOOR FINISHES. SEE ARCHITECTURAL DRAWINGS.

FOOTING SCHEDULE

	FOOTING SIZE: W x L x D	REINFORCING: (ONE-HALF EACH WAY)
A	3'-0"x3'-0"x12"	6 #4
B	3'-6"x3'-6"x12"	8 #4
C	4'-0"x4'-0"x12"	8 #5
D	4'-6"x4'-6"x12"	10 #5
E	5'-0"x5'-0"x12"	12 #5
F	5'-6"x5'-6"x14"	12 #6
G	6'-0"x6'-0"x14"	14 #6

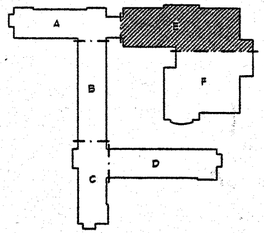

WEST CAMPUS LIVING/LEARNING COMPLEX
ALABAMA A&M UNIVERSITY

SMITH, KRANERT, TOMBLIN & ASSOCIATES, A. I. A.
ARCHITECTS, P.C.
HUNTSVILLE
FLORENCE
ALABAMA

JOB NUMBER

DRAWN BY-CHECKED BY-DATE 8-21-95

REVISED

SHEET TITLE
FOUNDATION PLAN PART E

SHEET NUMBER
S3 OF 23

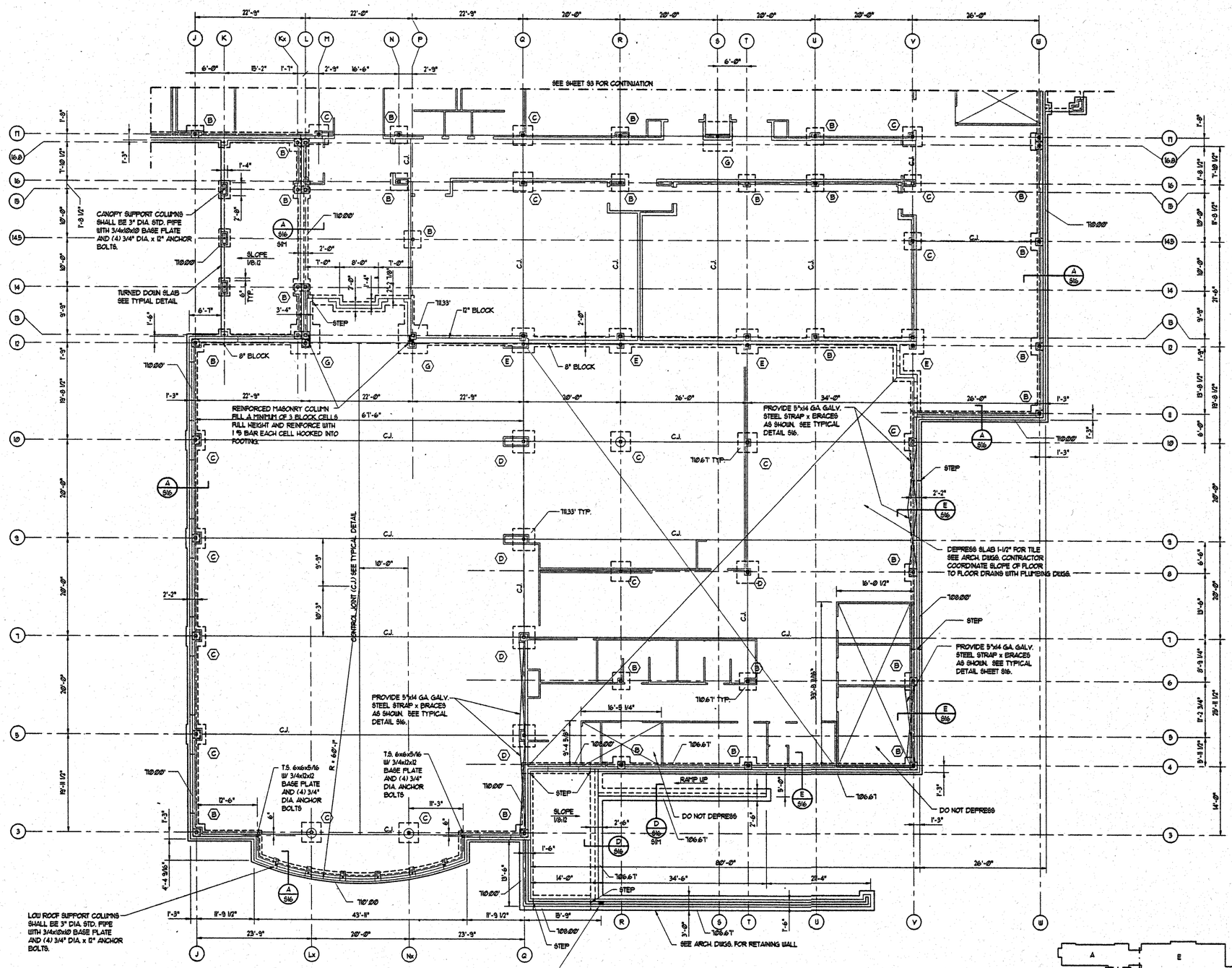

FOOTING SCHEDULE

	FOOTING SIZE: W x L x D	REINFORCING: (ONE-HALF EACH WAY)
A	3'-0"x3'-0"x12"	6 #4
B	3'-6"x3'-6"x12"	8 #4
C	4'-0"x4'-0"x12"	8 #5
D	4'-6"x4'-6"x12"	10 #5
E	5'-0"x5'-0"x12"	12 #5
F	5'-6"x5'-6"x14"	12 #6
G	6'-0"x6'-0"x14"	14 #6

FOUNDATION PLAN - PART F

SCALE: 1/8"=1'-0"

TOP OF SLAB (FINISHED FLOOR) ELEVATION 112.0' EXCEPT AS SHOWN OTHERWISE.
SLAB ON GRADE 4" CONCRETE, REINFORCED WITH 6x6 W4.0/W4.0 W.F. UNLESS SHOWN OTHERWISE.
TOP OF EXTERIOR WALL FOOTINGS 24" BELOW FINISHED FLOOR, OR 12" MINIMUM BELOW FINISHED GRADE, WHICHEVER IS LOWER, UNLESS SHOWN OTHERWISE.
TOP OF INTERIOR WALL FOOTINGS 8" BELOW FINISHED FLOOR EXCEPT AS SHOWN OTHERWISE.
FOOTING ELEVATIONS ARE SHOWN TO TOP OF FOOTINGS.
WALL FOOTINGS TO BE AT LEAST 12" WIDER THAN SUPPORTED WALL, UNLESS SHOWN OTHERWISE. FOOTING TO BE CENTERED UNDER WALL.
FILL CELLS OF CONCRETE BLOCK FOUNDATION WALLS WITH CONCRETE BELOW GRADE.
COORDINATE LOCATION OF CONTROL JOINTS WITH FLOOR FINISHES. SEE ARCH. DWGS.

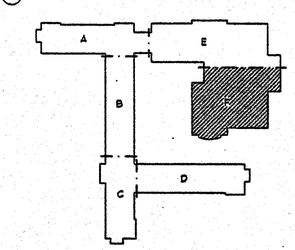

WEST CAMPUS LIVING/LEARNING COMPLEX
ALABAMA A&M UNIVERSITY

SMITH, KRANERT, TOMBLIN & ASSOCIATES
ARCHITECTS, P.C.
A. I. A.
FLORENCE HUNTSVILLE ALABAMA

JOB NUMBER

DRAWN BY: CHECKED BY: DATE: 8-21-99

REVISED

SHEET TITLE
FOUNDATION PLAN PART F

SHEET NUMBER
S4 OF 23

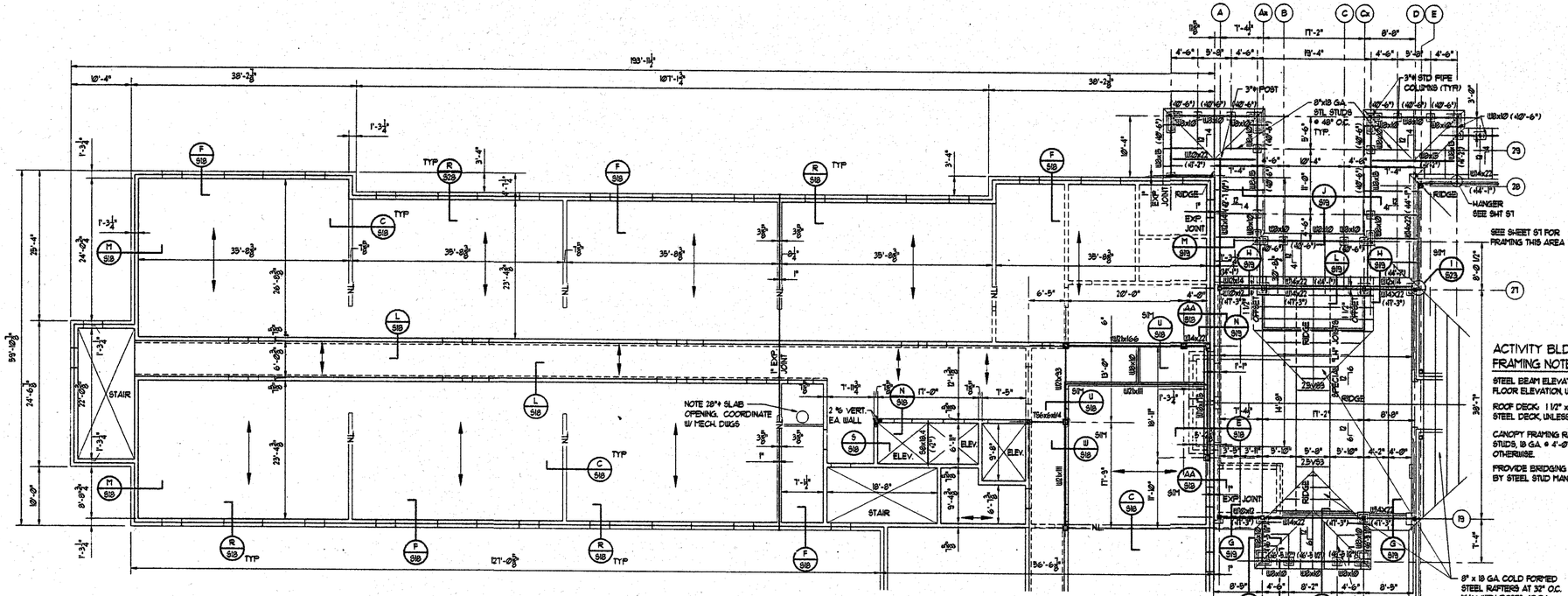

NORTH

SECOND FLOOR PLAN - PART A

SCALE: 1/8" = 1'-0"

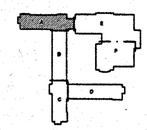

ACTIVITY BLDG CONNECTOR ROOF FRAMING NOTES:

STEEL BEAM ELEVATIONS SHOWN FROM FINISH FIRST FLOOR ELEVATION, UNLESS NOTED OTHERWISE.

ROOF DECK: 1 1/2" x 22 GA. TYPE "B" WIDE RIB STEEL DECK, UNLESS NOTED OTHERWISE.

CANOPY FRAMING RAFTERS TO BE 8" GALV. METAL STUDS, 18 GA. @ 4'-0" MAXIMUM, UNLESS NOTED OTHERWISE.

PROVIDE BRIDGING BETWEEN STUDS AS REQUIRED BY STEEL STUD MANUFACTURER.

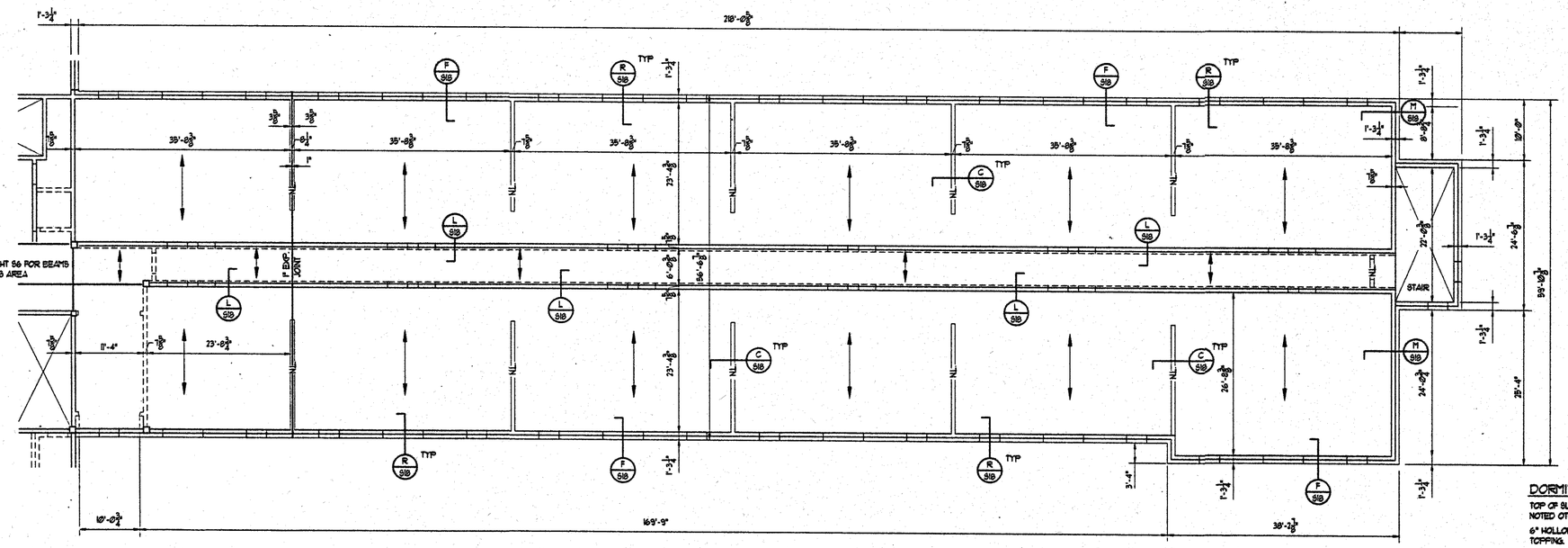

NORTH

SECOND FLOOR PLAN - PART D

SCALE: 1/8" = 1'-0"

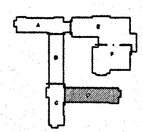

TYPICAL WALL REINFORCING

1. ALL BEARING WALLS (ALL WALLS EXCEPT THOSE NOTED AS NL = NONLOADBEARING WALLS)
   3RD FLR TO ROOF: #5 @ 48" O.C.
   2ND FLR TO 3RD FLR: #5 @ 16" O.C.
   1ST FLR TO 2ND FLR: #5 @ 8" O.C.
   AND AS NOTED ON PLANS.
2. ALL NONLOADBEARING WALLS SHALL BE REINFORCED WITH 1 #5 VERTICAL FULL HEIGHT AT 8'-0" O.C. STARTING ADJACENT TO OPENINGS. SEE FOUNDATION PLAN FOR EXAMPLE.
3. ALL LOADBEARING MASONRY WALLS SHALL HAVE A CONTINUOUS 8" DEEP BOND BEAM REINFORCED WITH 2 #5 AT 9'-4" ABOVE EACH FLOOR LEVEL. BOND BEAM REINFORCING SHALL BE CONTINUOUS. IF BOND BEAM CONFLICTS WITH LINTELS, EXTEND BOND BEAM REINFORCING THROUGH LINTELS.
4. ALL JAMBS IN LOADBEARING WALLS SHALL HAVE 2 #5 VERTICAL REINFORCING.

NOTE: ALL CELLS OF MASONRY WITH REINFORCING SHALL BE FILLED. ALL WALLS LESS THAN 4'-0" BETWEEN OPENINGS SHALL BE FILLED.

DORMITORY 2ND FLR FRAMING NOTES:

TOP OF SLAB (FINISH FLOOR) ELEVATION 722.0' UNLESS NOTED OTHERWISE.

6" HOLLOW CORE PRECAST SLAB WITH 2" CONCRETE TOPPING. REINFORCE WITH 6x6 W1.4xW1.4 WWF (SHEETS).

TOP OF STEEL BEAM ELEVATION 721.83' EXCEPT AS SHOWN (+/-) INCHES.

PRECAST MANUFACTURER NOTE STORAGE AREAS HAVE LIVE LOAD OF 125 psf AND LAUNDRY AREAS HAVE LIVE LOAD OF 60 psf.

NOTE ALL STRUCTURAL STEEL SHALL HAVE SPRAY ON FIREPROOFING, EXCEPT AS SHOWN OTHERWISE. SEE SPECIFICATIONS.

NOTIFY PRECAST MANUFACTURER OF ANY SLAB OPENINGS GREATER THAN 12"ø NOT LOCATED ON DRAWINGS.

STATE OF ALABAMA REGISTERED ARCHITECTS

ALABAMA REGISTERED PROFESSIONAL ENGINEER ROBERT M. MOULTRY

WEST CAMPUS LIVING/LEARNING COMPLEX
ALABAMA A&M UNIVERSITY

SMITH, KRANERT, TOMBLIN & ASSOCIATES
ARCHITECTS, P.C.
A. I. A.
ALABAMA
FLORENCE HUNTSVILLE

JOB NUMBER

8-23-95
DRAWN BY-CHECKED BY-DATE

REVISED

SHEET TITLE

SECOND FLOOR FRAMING PLAN PARTS A & D

SHEET NUMBER

S5
OF 23

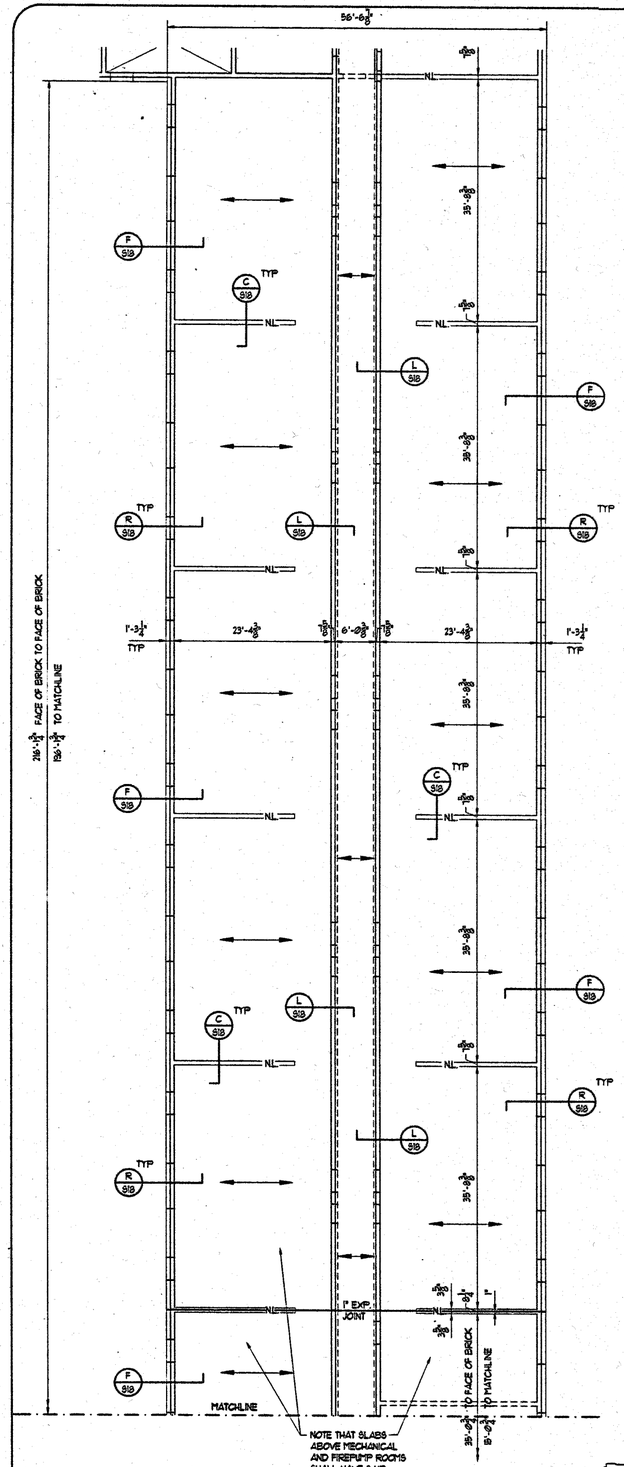

NORTH

SECOND FLOOR PLAN - PART B

SCALE: 1/8" = 1'-0"

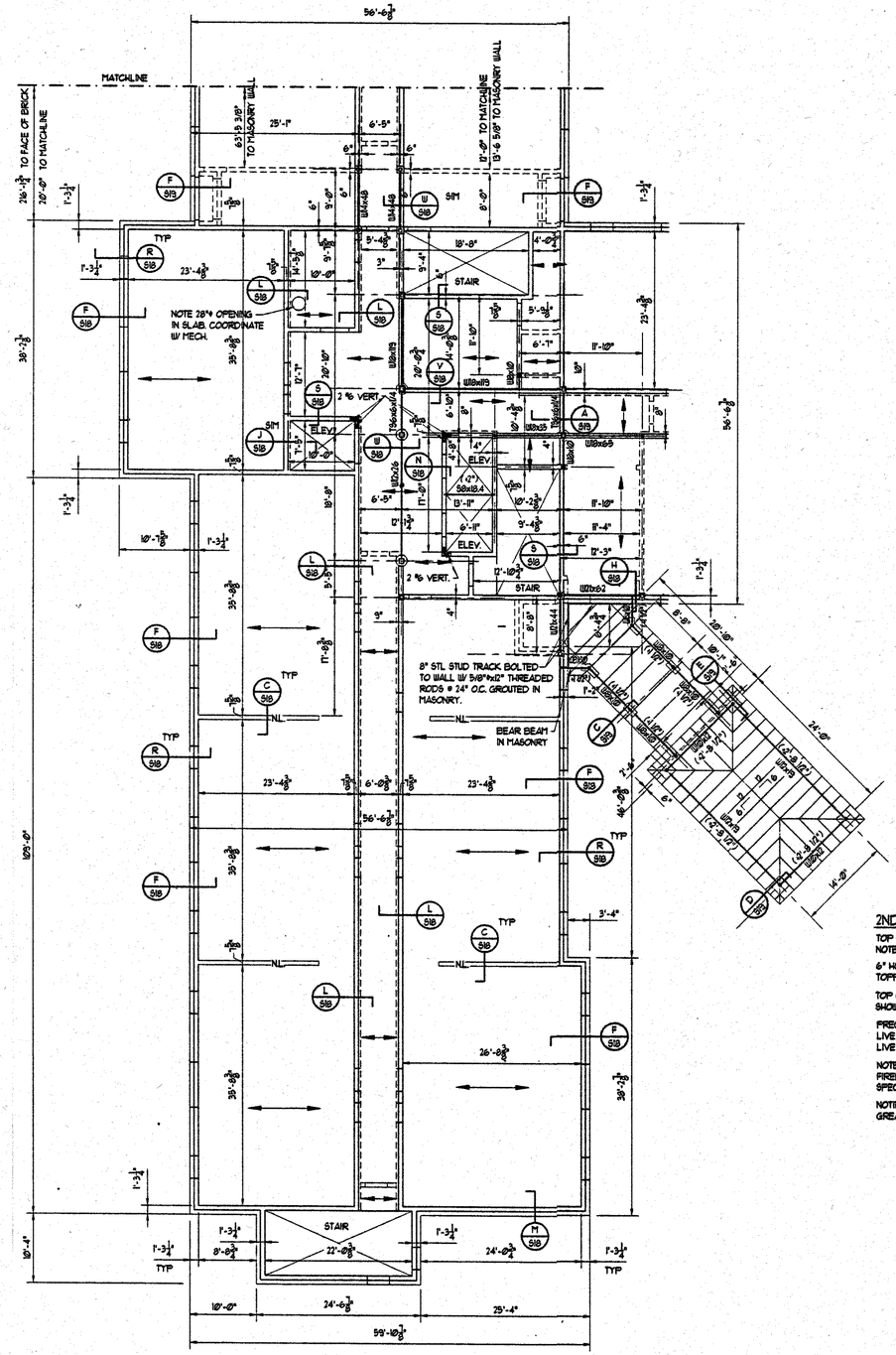

NORTH

SECOND FLOOR PLAN - PART C

SCALE: 1/8" = 1'-0"

2ND FLOOR FRAMING NOTES:

TOP OF SLAB (FINISH FLOOR) ELEVATION 122.0' UNLESS NOTED OTHERWISE.

6" HOLLOW CORE PRECAST SLAB WITH 2" CONCRETE TOPPING. REINFORCE WITH 6x6 W1.4/W1.4 WWF (SHEETS).

TOP OF STEEL BEAM ELEVATION 121.83' EXCEPT AS SHOWN (+/-) INCHES.

PRECAST MANUFACTURER NOTE STORAGE AREAS HAVE LIVE LOAD OF 125 psf AND LAUNDRY AREAS HAVE LIVE LOAD OF 60 psf.

NOTE ALL STRUCTURAL STEEL SHALL HAVE SPRAY ON FIREPROOFING, UNLESS NOTED OTHERWISE. SEE SPECIFICATIONS.

NOTIFY PRECAST MANUFACTURER OF ANY OPENINGS GREATER THAN 12"ø THAT ARE NOT SHOWN ON PLANS.

TYPICAL WALL REINFORCING

1. ALL BEARING WALLS
   (ALL WALLS EXCEPT THOSE NOTED AS NL = NONLOADBEARING WALLS)
   3RD FLR TO ROOF: #5 @ 48" O.C.
   2ND FLR TO 3RD FLR: #5 @ 16" O.C.
   1ST FLR TO 2ND FLR: #5 @ 8" O.C.
   AND AS NOTED ON PLANS.
2. ALL NONLOADBEARING WALLS SHALL BE REINFORCED WITH 1 #5 VERTICAL FULL HEIGHT AT 8'-0" O.C. STARTING ADJACENT TO OPENINGS. SEE FOUNDATION PLAN FOR EXAMPLE.
3. ALL LOADBEARING MASONRY WALLS SHALL HAVE A CONTINUOUS 8" DEEP BOND BEAM REINFORCED WITH 2 #5 AT 9'-4" ABOVE EACH FLOOR LEVEL. BOND BEAM REINFORCING SHALL BE CONTINUOUS. IF BOND BEAM CONFLICTS WITH LINTELS, EXTEND BOND BEAM REINFORCING THROUGH LINTELS.
4. ALL JAMBS IN LOADBEARING WALLS SHALL HAVE 2 #5 VERTICAL REINFORCING.

NOTE: ALL CELLS OF MASONRY WITH REINFORCING SHALL BE FILLED. ALL WALLS LESS THAN 4'-0" BETWEEN OPENINGS SHALL BE FILLED.

STATE OF ALABAMA REGISTERED ARCHITECTS

ALABAMA REGISTERED PROFESSIONAL ENGINEER No. 19452 ROBERT H. HODNETT

WEST CAMPUS LIVING/LEARNING COMPLEX
ALABAMA A&M UNIVERSITY

SMITH, KRANERT, TOMBLIN & ASSOCIATES
ARCHITECTS, P.C.
A. I. A.
ALABAMA
FLORENCE HUNTSVILLE

JOB NUMBER

HSH / FHH / 8-31-99
DRAWN BY-CHECKED BY-DATE

REVISED

SHEET TITLE
SECOND FLOOR FRAMING PLAN PARTS B & C

SHEET NUMBER
S6
OF 23

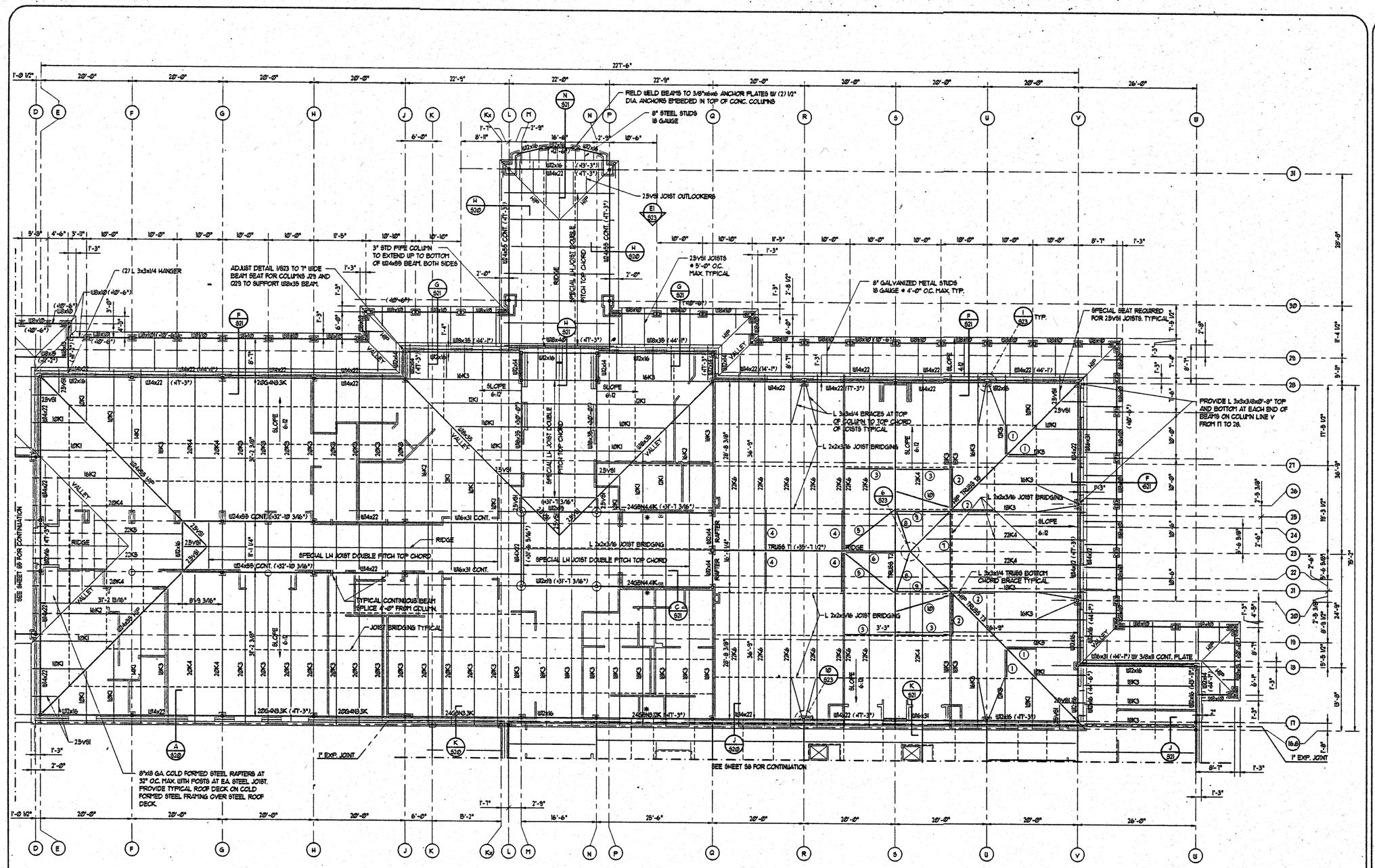

STEEL STUD SCHEDULE FOR EXTERIOR WALL STUDS AT ACTIVITIES BUILDING		
STUD SIZE	MAX. SPACING	H
C6x20 GA.	16"	13'-0"
C6x18 GA.	16"	14'-0"
C6x16 GA.	16"	15'-0"
C6x14 GA.	16"	15'-9"
C6x18 GA.	12"	15'-0"
C6x16 GA.	12"	16'-0"
C6x14 GA.	12"	17'-0"
C8x18 GA.	16"	18'-0"
C8x16 GA.	16"	19'-0"
C8x14 GA.	16"	20'-3"

"H" = MAXIMUM LATERALLY UNBRACED HEIGHT OF STUDS.

NOTE: AT OPENINGS WIDER THAN 3'-0", PROVIDE STUDS AT EACH SIDE OF OPENING TO REPLACE THOSE STUDS INTERRUPTED BY OPENING.

ROOF FRAMING PLAN - PART E

SCALE: 1/8"=1'-0"

TOP OF STEEL BEAMS (JOIST BEARING) ELEVATIONS ARE REFERENCED FROM FLOOR BELOW.

ROOF DECK: 1-1/2"x 22 GA TYPE "B" WIDE RIB STEEL DECK.

WHERE BEAMS ARE CONTINUOUS OVER SUPPORTING COLUMNS, BRACE BEAM WITH L 1-1/2x1-1/2x3/16 WELDED TO BOTTOM FLANGE OF BEAM AND TO JOIST BOTTOM CHORD PANEL POINT. REQUIRED AT JOISTS WITHIN 6 FEET OF COLUMN (ONE SIDE OF BEAM ONLY.)

WHERE JOISTS ARE SUPPORTED BY JOIST GIRDERS, SPACE JOISTS EQUALLY BETWEEN JOIST GIRDER SUPPORTS, AND ON JOIST GIRDER PANEL POINTS.

SEE SHEET S22 FOR ROOF TRUSS LAYOUTS.

CANOPY FRAMING RAFTERS TO BE 8" GALVANIZED METAL STUDS 18 GAUGE @ 4'-0" O.C. MAX.

* L 2x2x1/4 JOIST GIRDER BOTTOM CHORD BRACE

CONTRACTOR COORDINATE BEAM ELEVATIONS WITH JOIST MANUFACTURER. BEAM ELEVATIONS BASED ON 5 1/2" JOIST SEATS.

DESIGN SPECIAL "LH" JOISTS FOR 20 PSF. LIVE LOAD AND 20 PSF. DEAD LOAD.

BRICK LINTEL ANGLES ARE TO BE L 5x5x5/16 UNLESS SHOWN OTHERWISE.

ROOF TRUSS BRACING NOTES:

1) L 3x3x1/4 FROM BOTTOM CHORD OF TRUSS T3 TO JOIST TOP CHORD
2) L 4x4x1/4 FROM BOTTOM CHORD OF TRUSS T3 TO JOIST TOP CHORD
3) L 5x5x5/16 FROM BOTTOM CHORD OF TRUSS T2 TO JOIST TOP CHORD
4) L 4x4x1/4 FROM BOTTOM CHORD OF TRUSS T1 TO JOIST TOP CHORD
5) L 5x5x5/16 FROM TOP CHORD OF TRUSS T2 TO BOTTOM CHORD OF TRUSS T1
6) L 5x5x5/16 FROM TOP CHORD OF TRUSS T2 TO BOTTOM CHORD OF TRUSS T1
7) W 3x8 BETWEEN BOTTOM CHORDS OF TRUSSES T3
8) L 4x4x1/4 FROM TOP OF POST ABOVE TRUSS T2 TO TOP CHORD OF TRUSS T3 AND L 4x4x1/4 FROM TOP CHORD OF TRUSS T2 TO BOTTOM CHORD OF TRUSS T1 CANTILEVER.
9) L 5x5x5/16 FROM TOP CHORD OF TRUSS T2 TO BOTTOM CHORD OF TRUSS T3
10) L 5x5x5/16 FROM BOTTOM CHORD OF TRUSS T2 TO BOTTOM CHORD OF TRUSS T3.

FIELD WELD ALL BRACING ANGLES

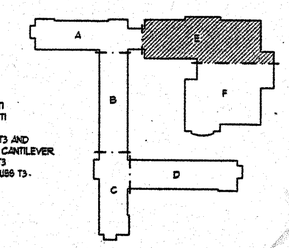

WEST CAMPUS LIVING/LEARNING COMPLEX
ALABAMA A&M UNIVERSITY

SMITH, KRANERT, TOMBLIN & ASSOCIATES - FLORENCE
KRANERT, TOMBLIN ARCHITECTS, P.C. A.I.A. HUNTSVILLE ALABAMA

JOB NUMBER

DATE / DRAWN BY / CHECKED BY / DATE
8-31-05

REVISIONS

SHEET TITLE
ROOF FRAMING PLAN PART E

SHEET NUMBER
S7
OF 23

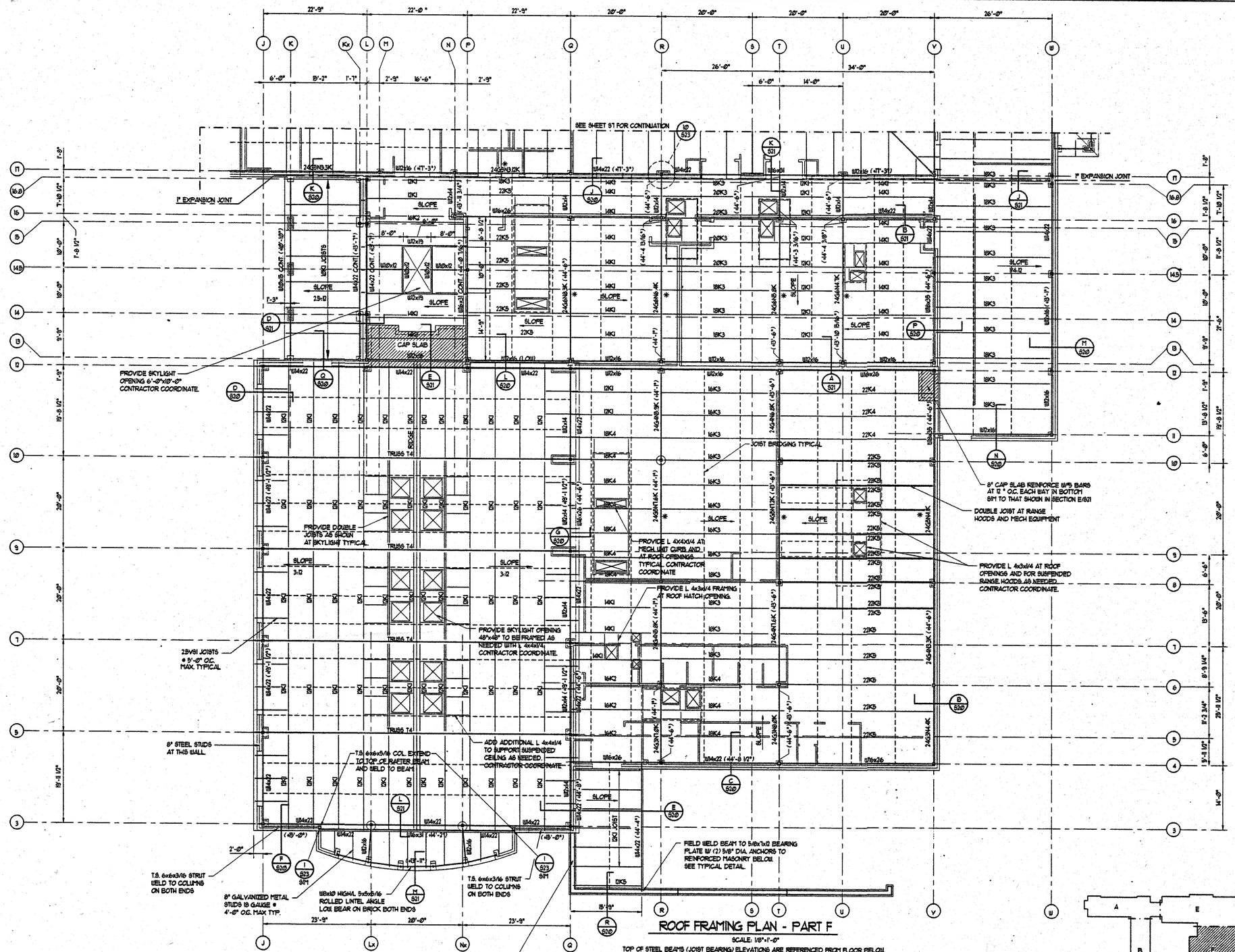

ROOF FRAMING PLAN - PART F

SCALE: 1/8"=1'-0"

TOP OF STEEL BEAMS (JOIST BEARING) ELEVATIONS ARE REFERENCED FROM FLOOR BELOW.

ROOF DECK: 1-1/2"x 22 GA TYPE "B" WIDE RIB STEEL DECK.

WHERE BEAMS ARE CONTINUOUS OVER SUPPORTING COLUMNS, BRACE BEAM WITH L 1-1/2x1-1/2x3/16 WELDED TO BOTTOM FLANGE OF BEAM AND TO JOIST BOTTOM CHORD PANEL POINT. REQUIRED AT JOISTS WITHIN 5 FEET OF COLUMN (ONE SIDE OF BEAM ONLY).

WHERE JOISTS ARE SUPPORTED BY JOIST GIRDERS, SPACE JOISTS EQUALLY BETWEEN JOIST GIRDER SUPPORTS, AND ON JOIST GIRDER PANEL POINTS.

SEE SHEET S22 FOR ROOF TRUSS LAYOUTS.

CANOPY FRAMING RAFTERS TO BE 8" GALVANIZED METAL STUDS 18 GAUGE @ 4'-0" O.C. MAX.

* L 2x2x1/4 JOIST GIRDER BOTTOM CHORD BRACE

CONTRACTOR COORDINATE BEAM ELEVATIONS WITH JOIST MANUFACTURER.

BRICK LINTEL ANGLES ARE TO BE L 5x5x5/16 UNLESS SHOWN OTHERWISE

FOR EXTERIOR WALL STEEL STUD SCHEDULE, SEE DRAWING S1.

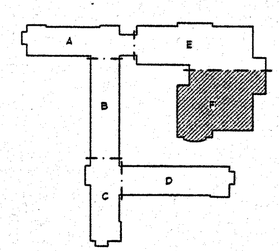

WEST CAMPUS LIVING/LEARNING COMPLEX
ALABAMA A&M UNIVERSITY

SMITH, KRANERT, TOMBLIN & ASSOCIATES
ARCHITECTS, P.C.
FLORENCE, ALA. HUNTSVILLE
ALABAMA

JOB NUMBER

DRAWN BY-CHECKED BY-DATE: CHT / RJH / 6-3-99

REVISIONS

SHEET TITLE: ROOF FRAMING PLAN PART F

SHEET NUMBER: S8 OF 23

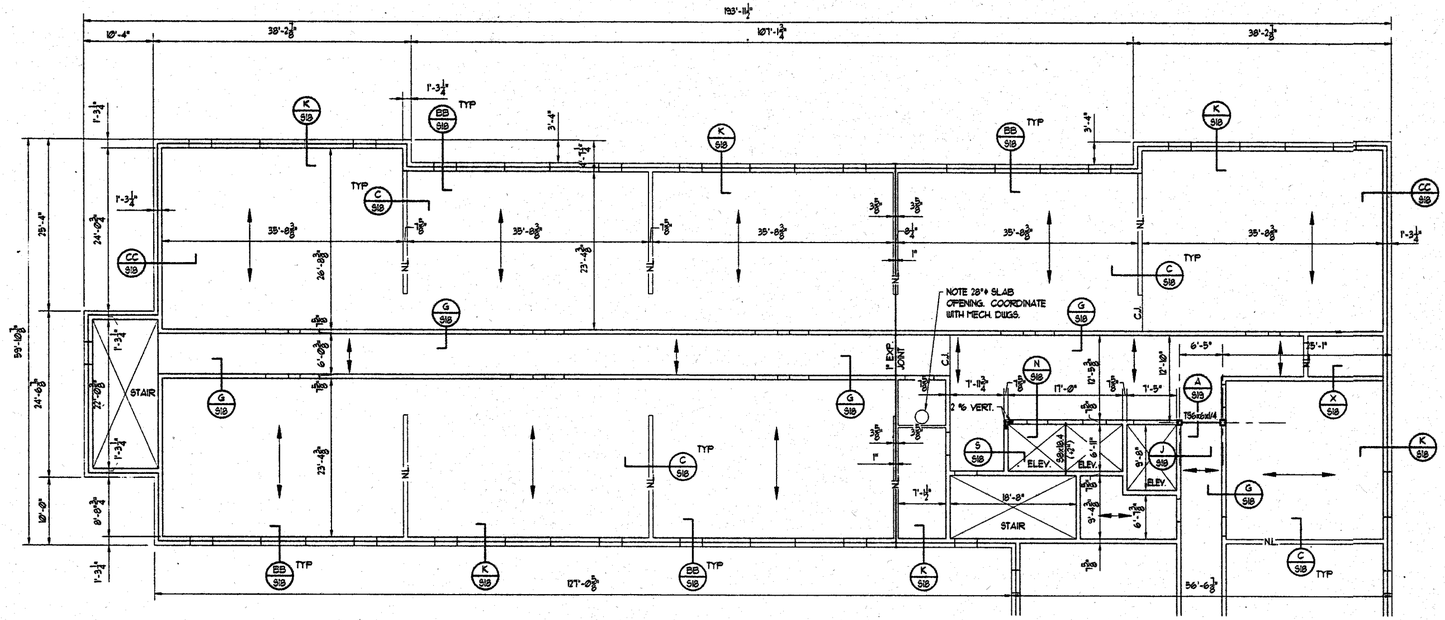

NORTH

THIRD FLOOR PLAN - PART A

SCALE: 1/8" = 1'-0"

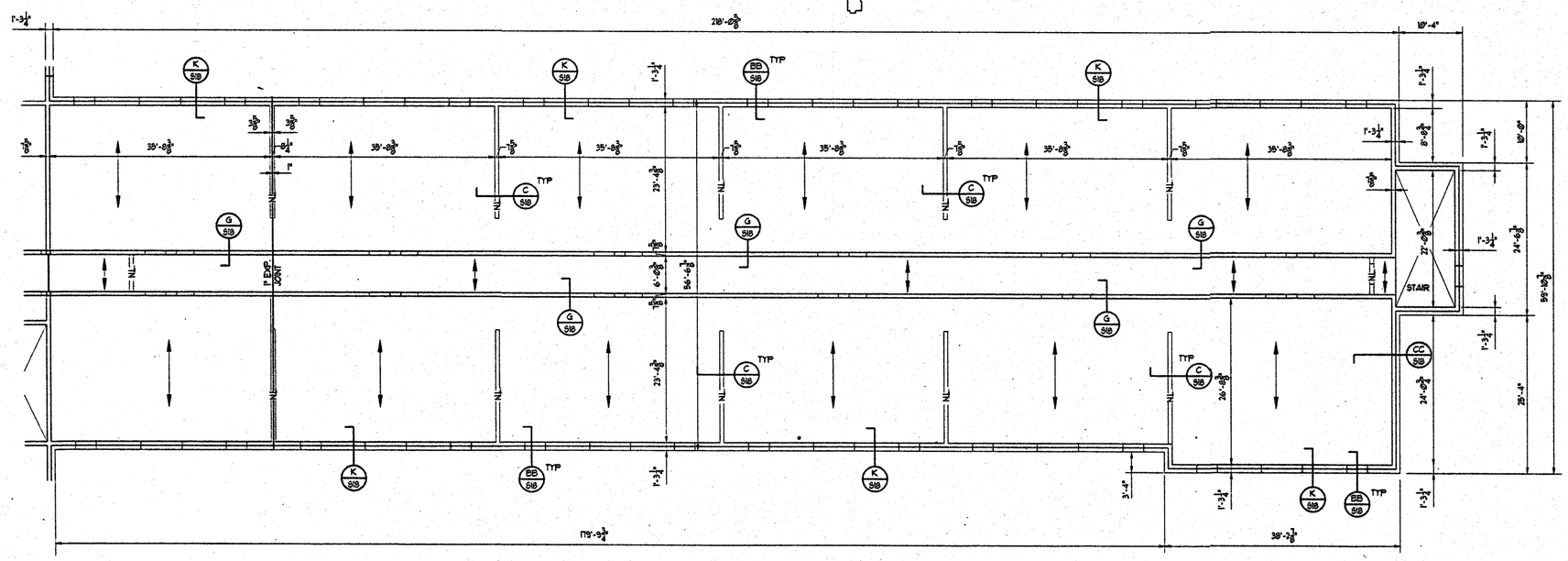

NORTH

THIRD FLOOR PLAN - PART D

SCALE: 1/8" = 1'-0"

3RD FLOOR FRAMING NOTES:

TOP OF SLAB (FINISH FLOOR) ELEVATION 132.0' UNLESS NOTED OTHERWISE.

6" HOLLOW CORE PRECAST SLAB WITH 2" CONCRETE TOPPING. REINFORCE WITH 6x6 W4/W4 WWF (SHEETS).

TOP OF STEEL BEAM ELEVATION 131.83' EXCEPT AS SHOWN (+/-) INCHES.

PRECAST MANUFACTURER NOTE STORAGE AREAS HAVE LIVE LOAD OF 125 psf.

NOTE ALL STRUCTURAL STEEL SHALL HAVE SPRAY ON FIREPROOFING, UNLESS SHOWN OTHERWISE. SEE SPECIFICATIONS.

NOTIFY PRECAST MANUFACTURER OF ANY SLAB OPENINGS GREATER THAN 12"ø NOT LOCATED ON DRAWINGS.

TYPICAL WALL REINFORCING

1. ALL BEARING WALLS (ALL WALLS EXCEPT THOSE NOTED AS NL = NONLOADBEARING WALLS) 3RD FLR TO ROOF: #5 @ 48" O.C. 2ND FLR TO 3RD FLR: #5 @ 16" O.C. 1ST FLR TO 2ND FLR: #5 @ 8" O.C. AND AS NOTED ON PLANS.
2. ALL NONLOADBEARING WALLS SHALL BE REINFORCED WITH 1 #5 VERTICAL FULL HEIGHT AT 8'-0" O.C., STARTING ADJACENT TO OPENINGS. SEE FOUNDATION PLAN FOR EXAMPLE.
3. ALL LOADBEARING MASONRY WALLS SHALL HAVE A CONTINUOUS 8" DEEP BOND BEAM REINFORCED WITH 2 #5 AT 9'-4" ABOVE EACH FLOOR LEVEL. BOND BEAM REINFORCING SHALL BE CONTINUOUS. IF BOND BEAM CONFLICTS WITH LINTELS, EXTEND BOND BEAM REINFORCING THROUGH LINTELS.
4. ALL JAMBS IN LOADBEARING WALLS SHALL HAVE 2 % VERTICAL REINFORCING.

NOTE: ALL CELLS OF MASONRY WITH REINFORCING SHALL BE FILLED. ALL WALLS LESS THAN 4'-0" BETWEEN OPENINGS SHALL BE FILLED.

STATE OF ALABAMA REGISTERED ARCHITECTS

ALABAMA REGISTERED No. 10452 PROFESSIONAL ENGINEER ROBERT H. HOUGETT

WEST CAMPUS LIVING/LEARNING COMPLEX
ALABAMA A&M UNIVERSITY

SMITH, KRANERT, TOMBLIN & ASSOCIATES, A. I. A.
ARCHITECTS, P.C.
FLORENCE HUNTSVILLE ALABAMA

JOB NUMBER

DRAWN BY: RHH CHECKED BY: RHH DATE: 8-21-98

REVISED

SHEET TITLE

THIRD FLOOR FRAMING PLAN PARTS A & D

SHEET NUMBER

S9 OF 23

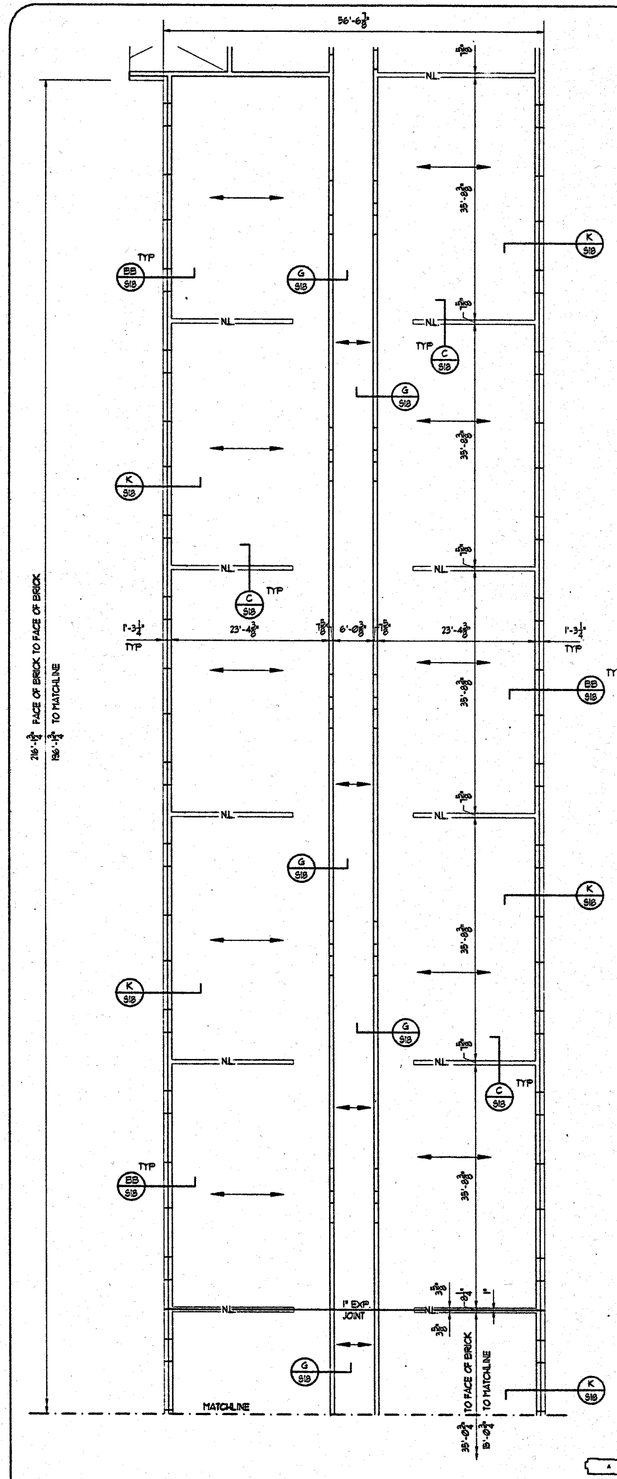

NORTH

THIRD FLOOR PLAN - PART B

SCALE: 1/8" = 1'-0"

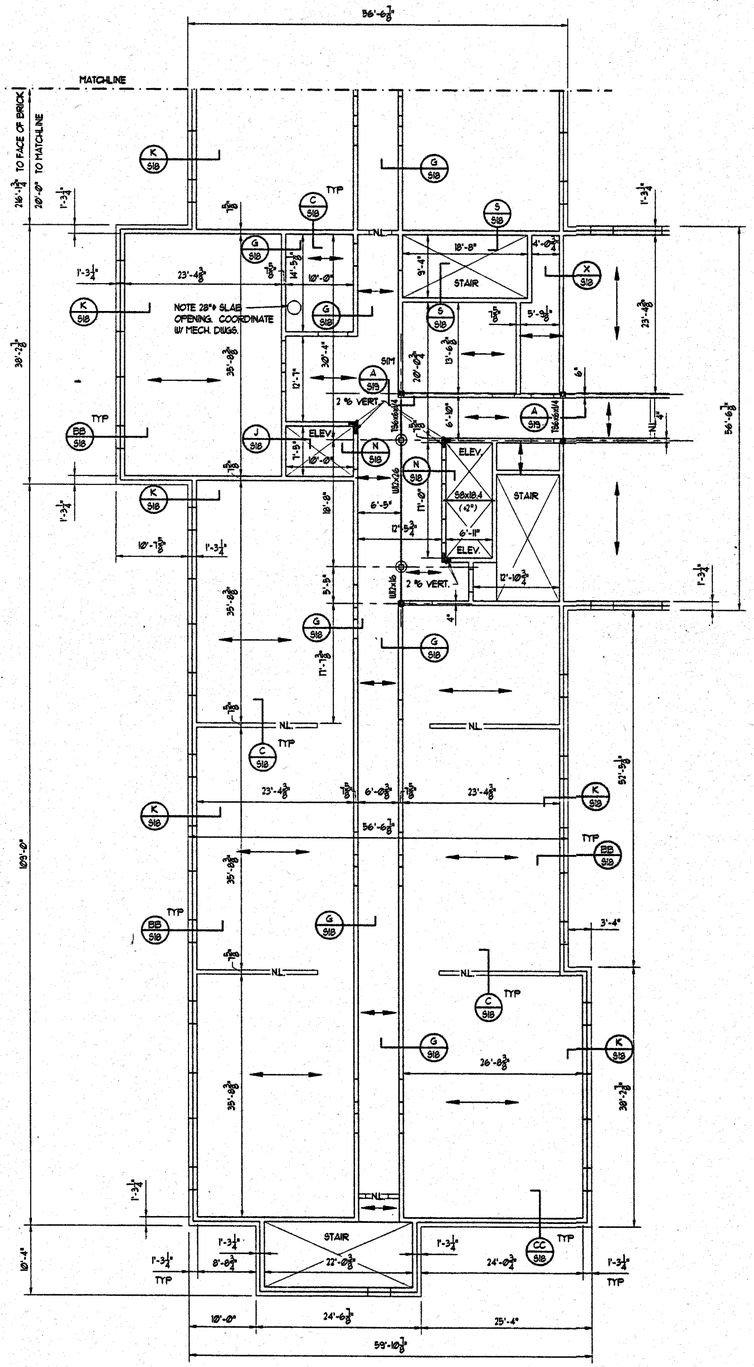

NORTH

THIRD FLOOR PLAN - PART C

SCALE: 1/8" = 1'-0"

3RD FLOOR FRAMING NOTES:

TOP OF SLAB (FINISH FLOOR) ELEVATION "332.0" UNLESS NOTED OTHERWISE.

6" HOLLOW CORE PRECAST SLAB WITH 2" CONCRETE TOPPING. REINFORCE WITH 6x6 W1.4/W1.4 WWF (SHEETS).

TOP OF STEEL BEAM ELEVATION "331.83" EXCEPT AS SHOWN (+/-) INCHES.

PRECAST MANUFACTURER NOTE STORAGE AREAS HAVE LIVE LOAD OF 125 psf.

NOTE ALL STRUCTURAL STEEL SHALL HAVE SPRAY ON FIREPROOFING, UNLESS NOTED OTHERWISE. SEE SPECIFICATIONS.

NOTIFY PRECAST MANUFACTURER OF ANY SLAB OPENINGS GREATER THAN 12"ø NOT LOCATED ON DRAWINGS.

TYPICAL WALL REINFORCING

1. ALL BEARING WALLS
   (ALL WALLS EXCEPT THOSE NOTED AS NL = NONLOADBEARING WALLS)
   3RD FLR TO ROOF: #5 @ 48" O.C.
   2ND FLR TO 3RD FLR: #5 @ 16" O.C.
   1ST FLR TO 2ND FLR: #5 @ 8" O.C.
   AND AS NOTED ON PLANS.
2. ALL NONLOADBEARING WALLS SHALL BE REINFORCED WITH 1 #5 VERTICAL FULL HEIGHT AT 8'-0" O.C., STARTING ADJACENT TO OPENINGS. SEE FOUNDATION PLAN FOR EXAMPLE.
3. ALL LOADBEARING MASONRY WALLS SHALL HAVE A CONTINUOUS 8" DEEP BOND BEAM REINFORCED WITH 2 #5 AT 9'-4" ABOVE EACH FLOOR LEVEL. BOND BEAM REINFORCING SHALL BE CONTINUOUS. IF BOND BEAM CONFLICTS WITH LINTELS, EXTEND BOND BEAM REINFORCING THROUGH LINTELS.
4. ALL JAMBS IN LOADBEARING WALLS SHALL HAVE 2 #5 VERTICAL REINFORCING.

NOTE: ALL CELLS OF MASONRY WITH REINFORCING SHALL BE FILLED. ALL WALLS LESS THAN 4'-0" BETWEEN OPENINGS SHALL BE FILLED.

STATE OF ALABAMA REGISTERED ARCHITECTS

ALABAMA REGISTERED No. 10452 Professional Engineer ROBERT H. HODNETT

WEST CAMPUS LIVING/LEARNING COMPLEX
ALABAMA A&M UNIVERSITY

SMITH, KRANERT, TOMBLIN & ASSOCIATES A. I. A. ARCHITECTS, P.C.
FLORENCE ALABAMA HUNTSVILLE

JOB NUMBER

MSH / 9-24-99 / 8-31-99
DRAWN BY-CHECKED BY-DATE

REVISED

SHEET TITLE
THIRD FLOOR FRAMING PLAN PARTS B & C

SHEET NUMBER
S10
OF 23

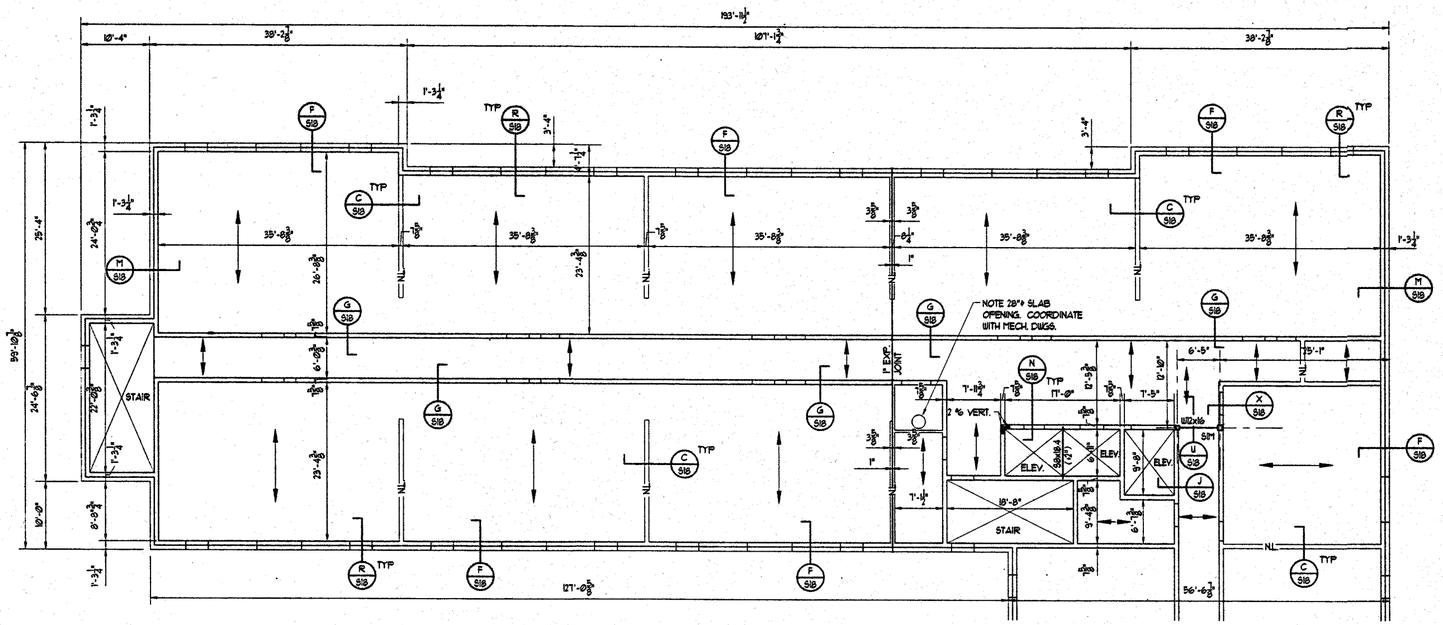

NORTH

FOURTH & FIFTH FLOOR PLAN - PLAN A

SCALE: 1/8" = 1'-0"

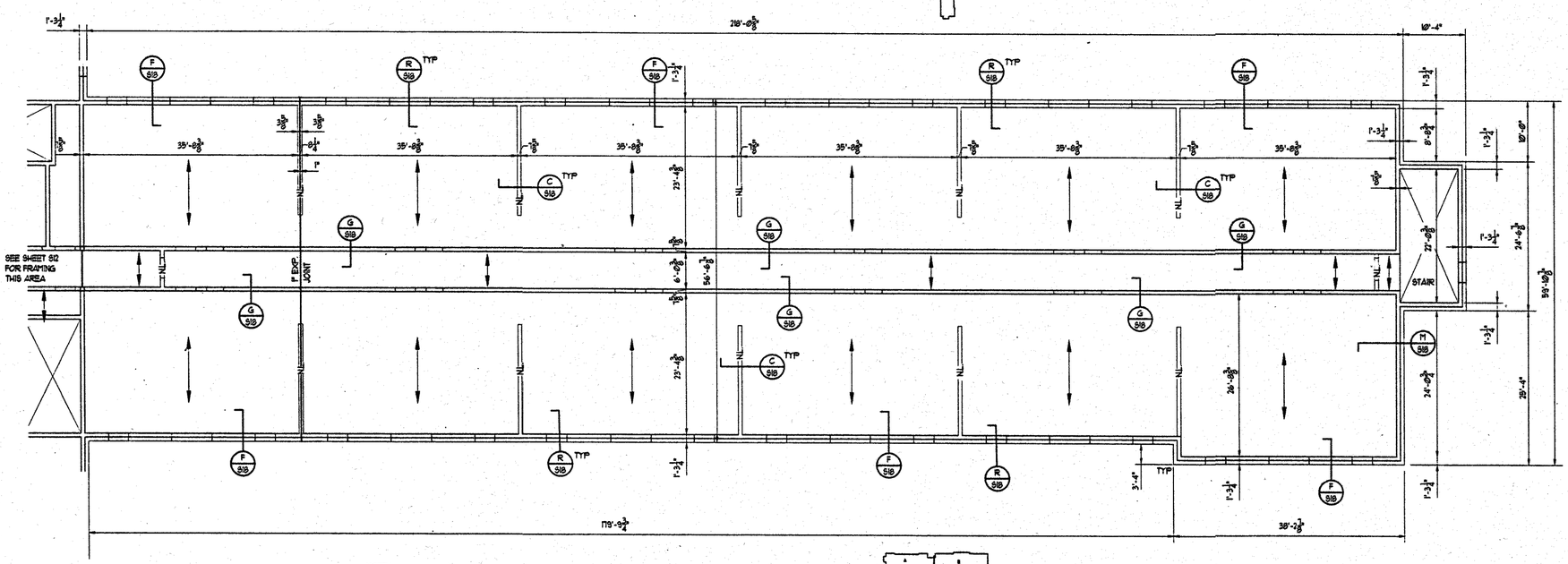

NORTH

FOURTH & FIFTH FLOOR PLAN - PART D

SCALE: 1/8" = 1'-0"

4TH & 5TH FLOOR FRAMING NOTES:

TOP OF 4TH FLOOR SLAB (FINISH FLOOR) ELEVATION "142.0" UNLESS NOTED OTHERWISE.

TOP OF 5TH FLOOR SLAB (FINISH FLOOR) ELEVATION "152.0" UNLESS NOTED OTHERWISE.

6" HOLLOW CORE PRECAST SLAB WITH 2" CONCRETE TOPPING. REINFORCE WITH 6x6 W1.4/W1.4 WWF (SHEETS).

TOP OF STEEL BEAMS 2" BELOW FINISH FLOOR SLAB EXCEPT AS SHOWN (+/-) INCHES.

PRECAST MANUFACTURER NOTE STORAGE AREAS HAVE LIVE LOAD OF 125 psf.

NOTE ALL STRUCTURAL STEEL SHALL HAVE SPRAY ON FIREPROOFING, UNLESS NOTED OTHERWISE. SEE SPECIFICATIONS.

NOTIFY PRECAST MANUFACTURER OF ANY SLAB OPENINGS GREATER THAT 12"ø NOT LOCATED ON DRAWINGS.

TYPICAL WALL REINFORCING

1. ALL BEARING WALLS (ALL WALLS EXCEPT THOSE NOTED AS NL = NONLOADBEARING WALLS)
   3RD FLR TO ROOF: #5 @ 48" O.C.
   2ND FLR TO 3RD FLR: #5 @ 16" O.C.
   1ST FLR TO 2ND FLR: #5 @ 8" O.C.
   AND AS NOTED ON PLANS.
2. ALL NONLOADBEARING WALLS SHALL BE REINFORCED WITH 1 #5 VERTICAL FULL HEIGHT AT 8'-0" O.C. STARTING ADJACENT TO OPENINGS. SEE FOUNDATION PLAN FOR EXAMPLE.
3. ALL LOADBEARING MASONRY WALLS SHALL HAVE A CONTINUOUS 8" DEEP BOND BEAM REINFORCED WITH 2 #5 AT 3'-4" ABOVE EACH FLOOR LEVEL. BOND BEAM REINFORCING SHALL BE CONTINUOUS. IF BOND BEAM CONFLICTS WITH LINTELS, EXTEND BOND BEAM REINFORCING THROUGH LINTELS.
4. ALL JAMBS IN LOADBEARING WALLS SHALL HAVE 2 #5 VERTICAL REINFORCING.

NOTE: ALL CELLS OF MASONRY WITH REINFORCING SHALL BE FILLED. ALL WALLS LESS THAN 4'-0" BETWEEN OPENINGS SHALL BE FILLED.

STATE OF ALABAMA REGISTERED ARCHITECT

ALABAMA REGISTERED No. 10453 PROFESSIONAL ENGINEER ROBERT H. HUDNETT

WEST CAMPUS LIVING/LEARNING COMPLEX
ALABAMA A&M UNIVERSITY

SMITH, KRANERT, TOMBLIN & ASSOCIATES
ARCHITECTS, P.C.
A. I. A.
HUNTSVILLE
FLORENCE
ALABAMA

JOB NUMBER

SHEET TITLE

FOURTH & FIFTH FLOOR FRAMING PLANS PARTS A & D

SHEET NUMBER

S11 OF 23

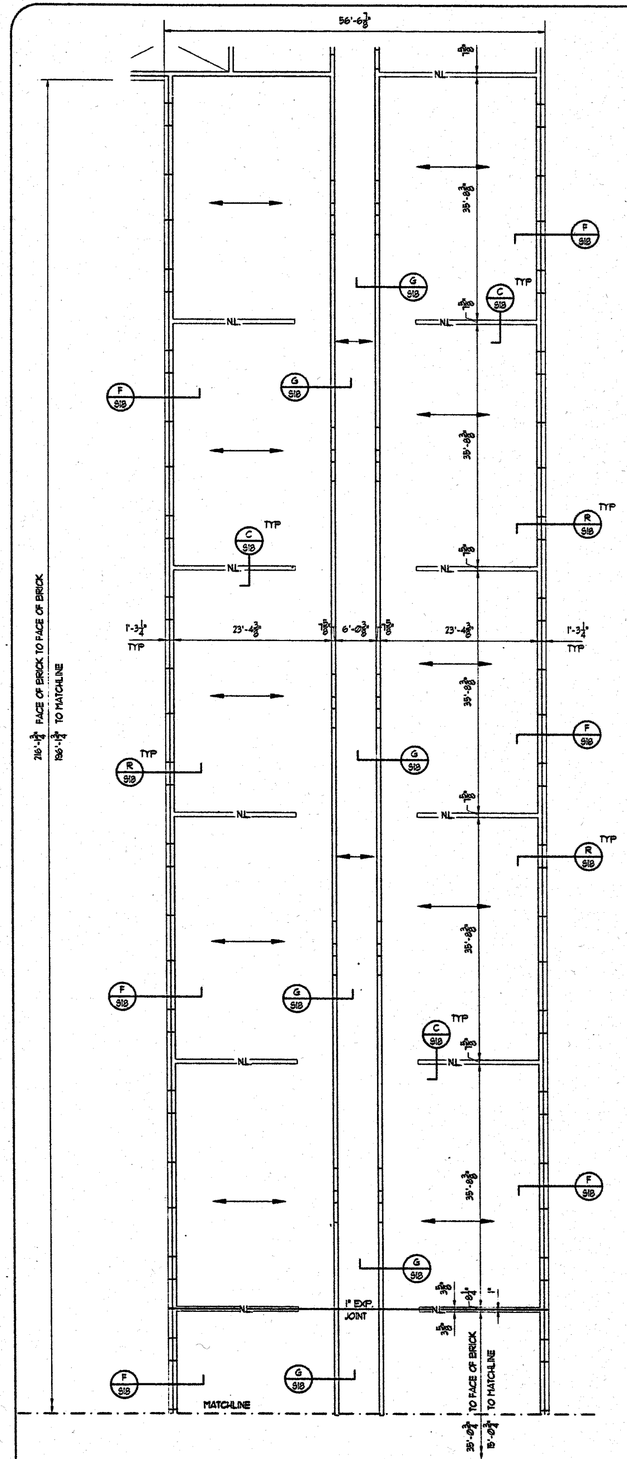

NORTH

FOURTH & FIFTH FLOOR PLAN - PART B

SCALE: 1/8" = 1'-0"

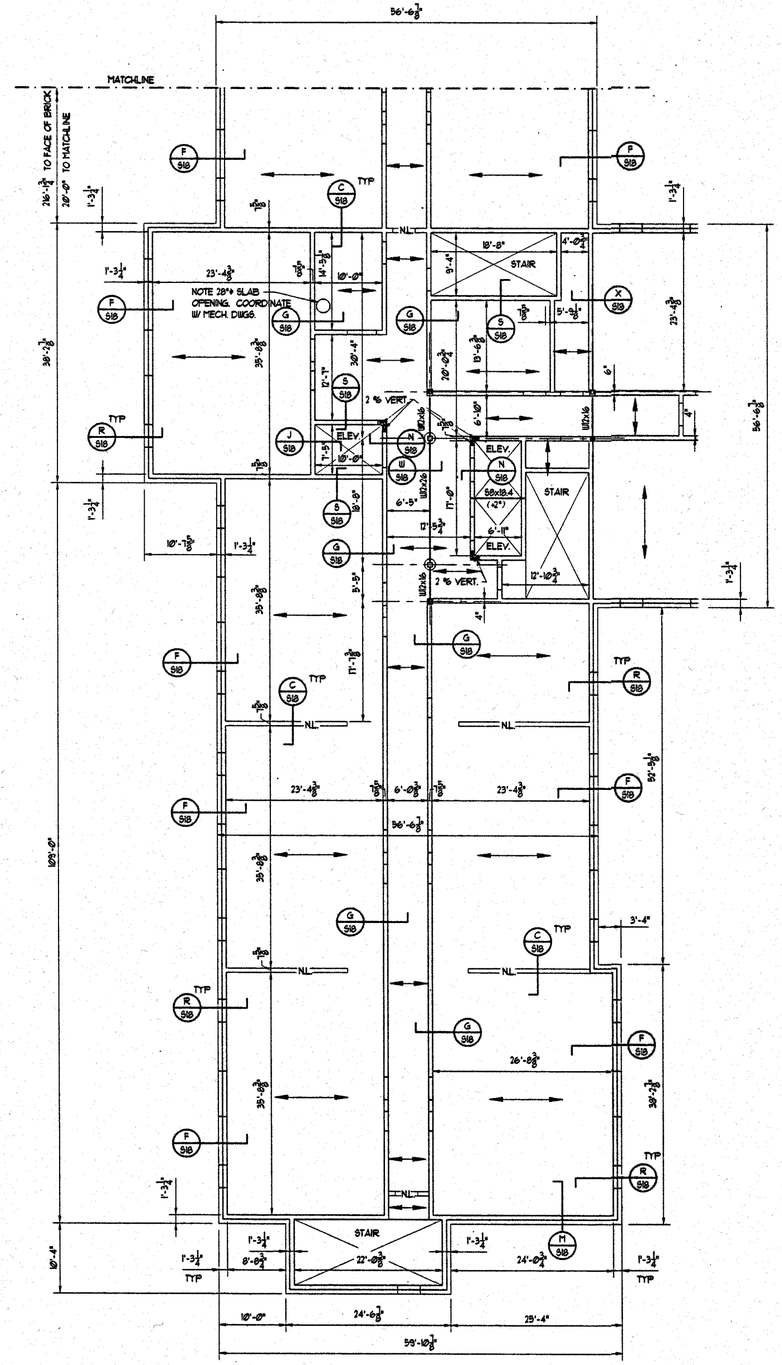

NORTH

FOURTH & FIFTH FLOOR PLAN - PART C

SCALE: 1/8" = 1'-0"

4TH & 5TH FLOOR FRAMING NOTES:

TOP OF 4TH FLOOR SLAB (FINISH FLOOR) ELEVATION "412.0" UNLESS NOTED OTHERWISE.

TOP OF 5TH FLOOR SLAB (FINISH FLOOR) ELEVATION "732.0" UNLESS NOTED OTHERWISE.

6" HOLLOW CORE PRECAST SLAB WITH 2" CONCRETE TOPPING. REINFORCE WITH 6x6 W4/W4.4 WWF (SHEETS).

TOP OF STEEL BEAMS 2" BELOW FINISH FLOOR SLAB EXCEPT AS SHOWN (+/-) INCHES.

PRECAST MANUFACTURER NOTE STORAGE AREAS HAVE LIVE LOAD OF 125 psf.

NOTE ALL STRUCTURAL STEEL SHALL HAVE SPRAY ON FIREPROOFING, UNLESS NOTED OTHERWISE. SEE SPECIFICATIONS.

NOTIFY PRECAST MANUFACTURER OF ANY SLAB OPENINGS GREATER THAN 12"ø NOT LOCATED ON DRAWINGS.

TYPICAL WALL REINFORCING

1. ALL BEARING WALLS
   (ALL WALLS EXCEPT THOSE NOTED AS NL = NONLOADBEARING WALLS)
   3RD FLR TO ROOF: #5 @ 48" O.C.
   2ND FLR TO 3RD FLR: #5 @ 16" O.C.
   1ST FLR TO 2ND FLR: #5 @ 8" O.C.
   AND AS NOTED ON PLANS.
2. ALL NONLOADBEARING WALLS SHALL BE REINFORCED WITH 1 #5 VERTICAL FULL HEIGHT AT 8'-0" O.C. STARTING ADJACENT TO OPENINGS. SEE FOUNDATION PLAN FOR EXAMPLE.
3. ALL LOADBEARING MASONRY WALLS SHALL HAVE A CONTINUOUS 8" DEEP BOND BEAM REINFORCED WITH 2 #5 AT 9'-4" ABOVE EACH FLOOR LEVEL. BOND BEAM REINFORCING SHALL BE CONTINUOUS. IF BOND BEAM CONFLICTS WITH LINTELS, EXTEND BOND BEAM REINFORCING THROUGH LINTELS.
4. ALL JAMBS IN LOADBEARING WALLS SHALL HAVE 2 % VERTICAL REINFORCING.

   NOTE: ALL CELLS OF MASONRY WITH REINFORCING SHALL BE FILLED. ALL WALLS LESS THAN 4'-0" BETWEEN OPENINGS SHALL BE FILLED.

STATE OF ALABAMA REGISTERED ARCHITECT

ALABAMA REGISTERED PROFESSIONAL ENGINEER ROBERT H. HODNETT

WEST CAMPUS LIVING/LEARNING COMPLEX
ALABAMA A&M UNIVERSITY

SMITH, KRANERT, TOMBLIN & ASSOCIATES
A. I. A.
ARCHITECTS, P.C.
ALABAMA
HUNTSVILLE
FLORENCE

JOB NUMBER

DRAWN BY-CHECKED BY-DATE

REVISIONED

SHEET TITLE
FOURTH & FIFTH FLOOR FRAMING PLANS PARTS B & C

SHEET NUMBER
S12
OF
23

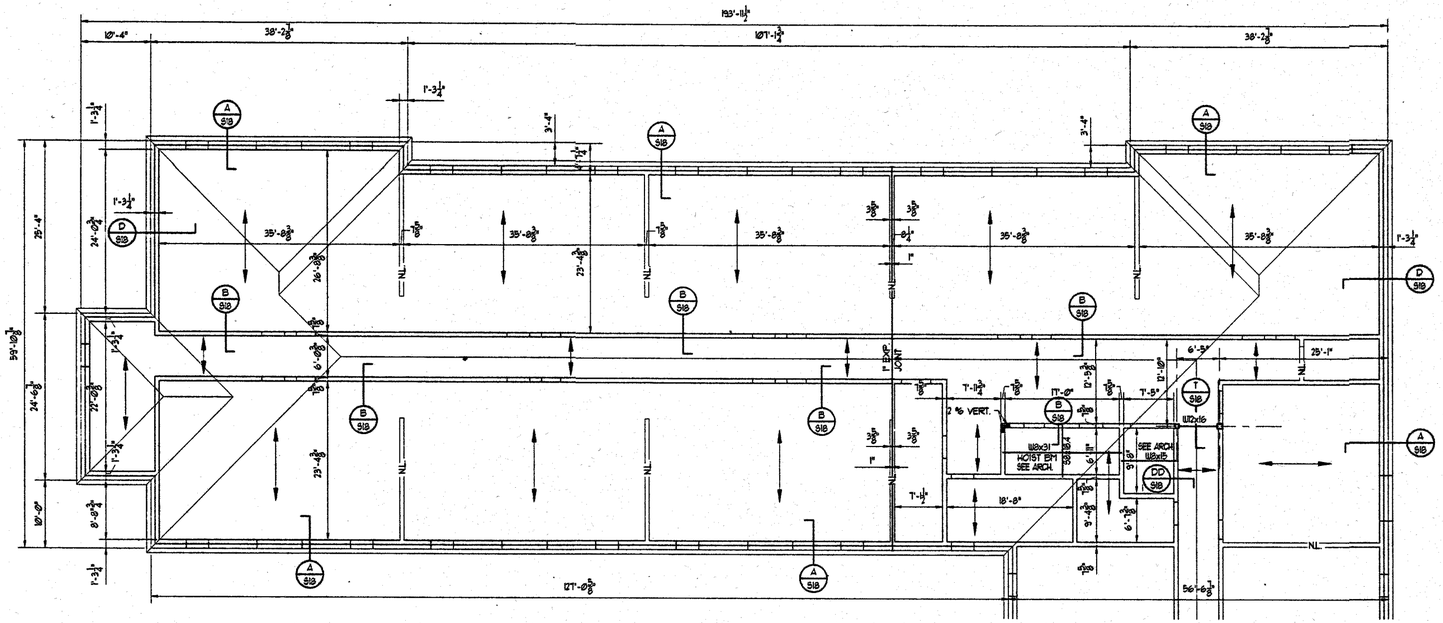

NORTH

ATTIC LEVEL PLAN - PART A

SCALE: 1/8" = 1'-0"

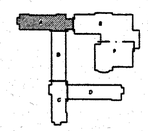

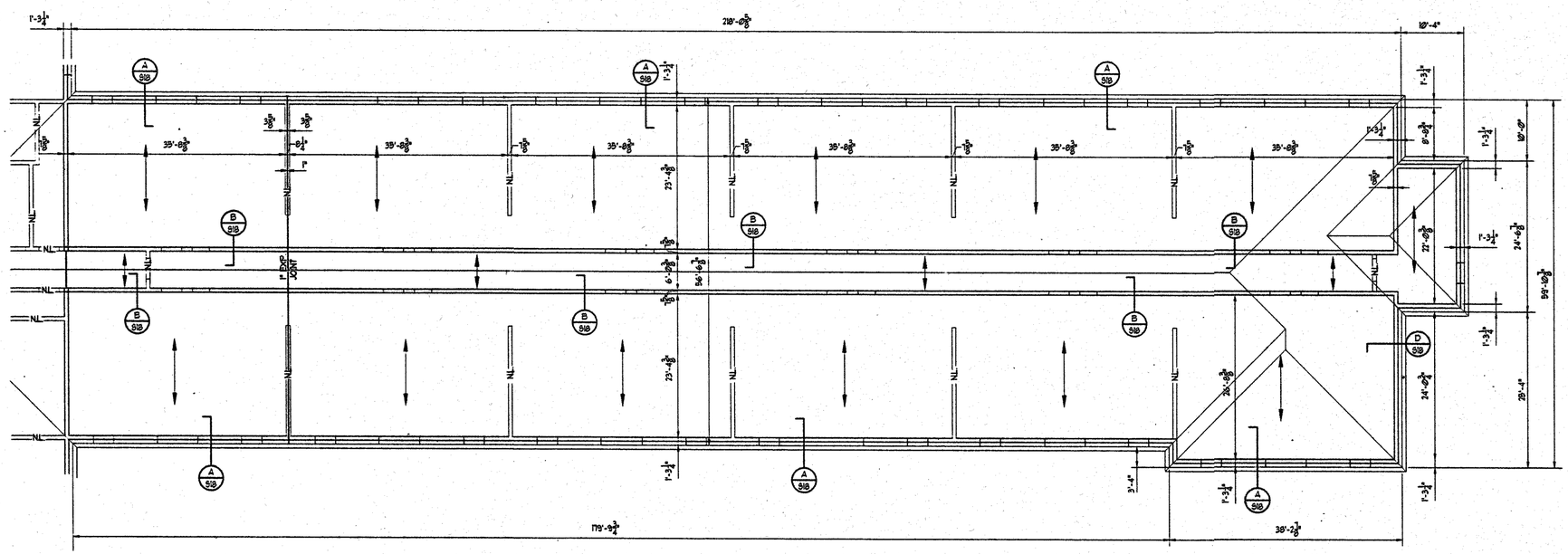

NORTH

ATTIC LEVEL PLAN - PART D

SCALE: 1/8" = 1'-0"

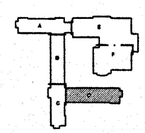

ATTIC LEVEL FRAMING NOTES:

TOP OF SLAB (FINISH FLOOR) ELEVATION '152.0' UNLESS NOTED OTHERWISE.

6" HOLLOW CORE PRECAST SLAB.

TOP OF STEEL BEAM ELEVATION '152.0' EXCEPT AS SHOWN (+/-) INCHES.

ROOF CONSTRUCTION: PROVIDE PRE-ENGINEERED ROOF STRUCTURE. SEE ARCH. DRAWINGS.

DESIGN ATTIC PRECAST SLAB TO SUPPORT PRE-ENGINEERED ROOF STRUCTURE AS A UNIFORM LOAD. NOTICE MECHANICAL LOADS ON ATTIC FLOOR.

SEE ARCHITECTURAL DRAWINGS FOR LOCATIONS OF ATTIC ACCESS.

NOTE ALL STRUCTURAL STEEL SHALL HAVE SPRAY ON FIREPROOFING, UNLESS NOTED OTHERWISE. SEE SPECIFICATIONS.

NOTIFY PRECAST MANUFACTURER OF ANY SLAB OPENINGS GREATER THAN 12"ø NOT LOCATED ON DRAWINGS.

DO NOT BEAR ROOF FRAMING ON HOIST BEAMS.

TYPICAL WINDOW LINTEL SHALL BE SIMILAR TO SECTION R/S19.

STATE OF ALABAMA REGISTERED ARCHITECT

ALABAMA REGISTERED PROFESSIONAL ENGINEER No. 10452 ROBERT H. HODNETT

WEST CAMPUS LIVING/LEARNING COMPLEX
ALABAMA A&M UNIVERSITY

SMITH, KRANERT, TOMBLIN & ASSOCIATES
ARCHITECTS, P.C.
FLORENCE A.I.A. HUNTSVILLE
ALABAMA

JOB NUMBER

MEH / RHH / 8-21-98
DRAWN BY-CHECKED BY-DATE

REVISED

SHEET TITLE
ATTIC LEVEL FRAMING PLAN PARTS A & D

SHEET NUMBER
S13
OF
23

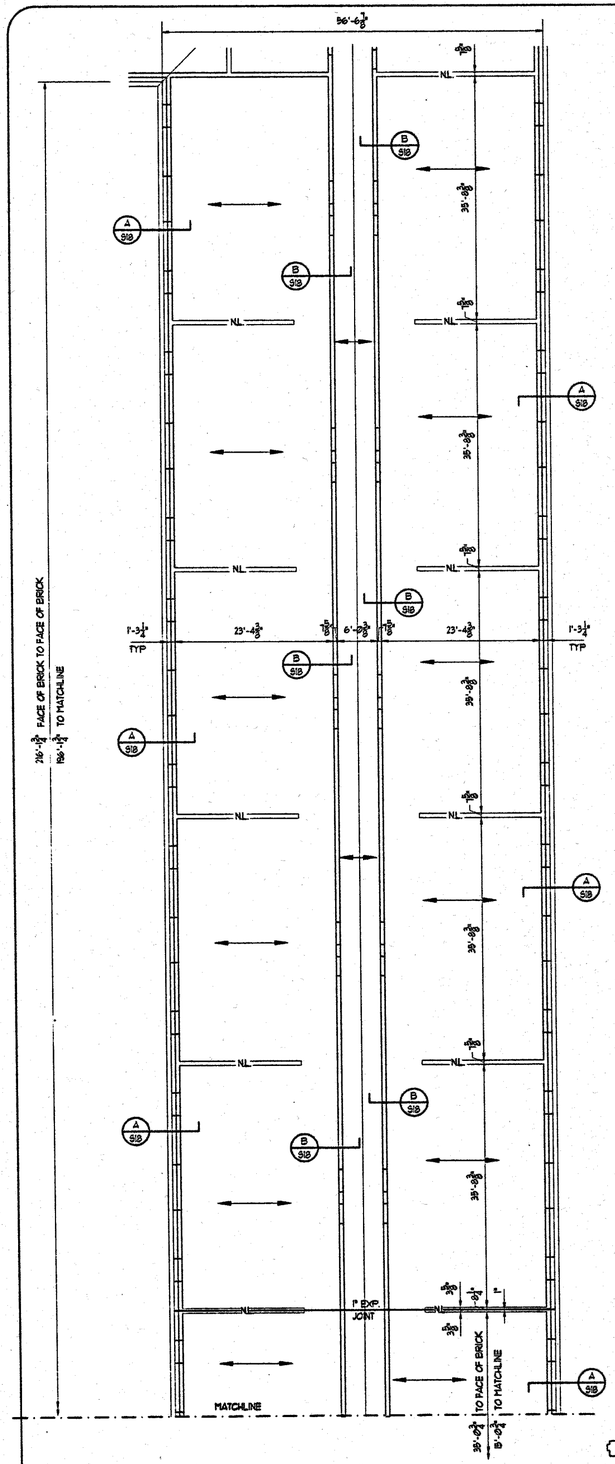

NORTH

ATTIC LEVEL PLAN - PART B

SCALE: 1/8" = 1'-0"

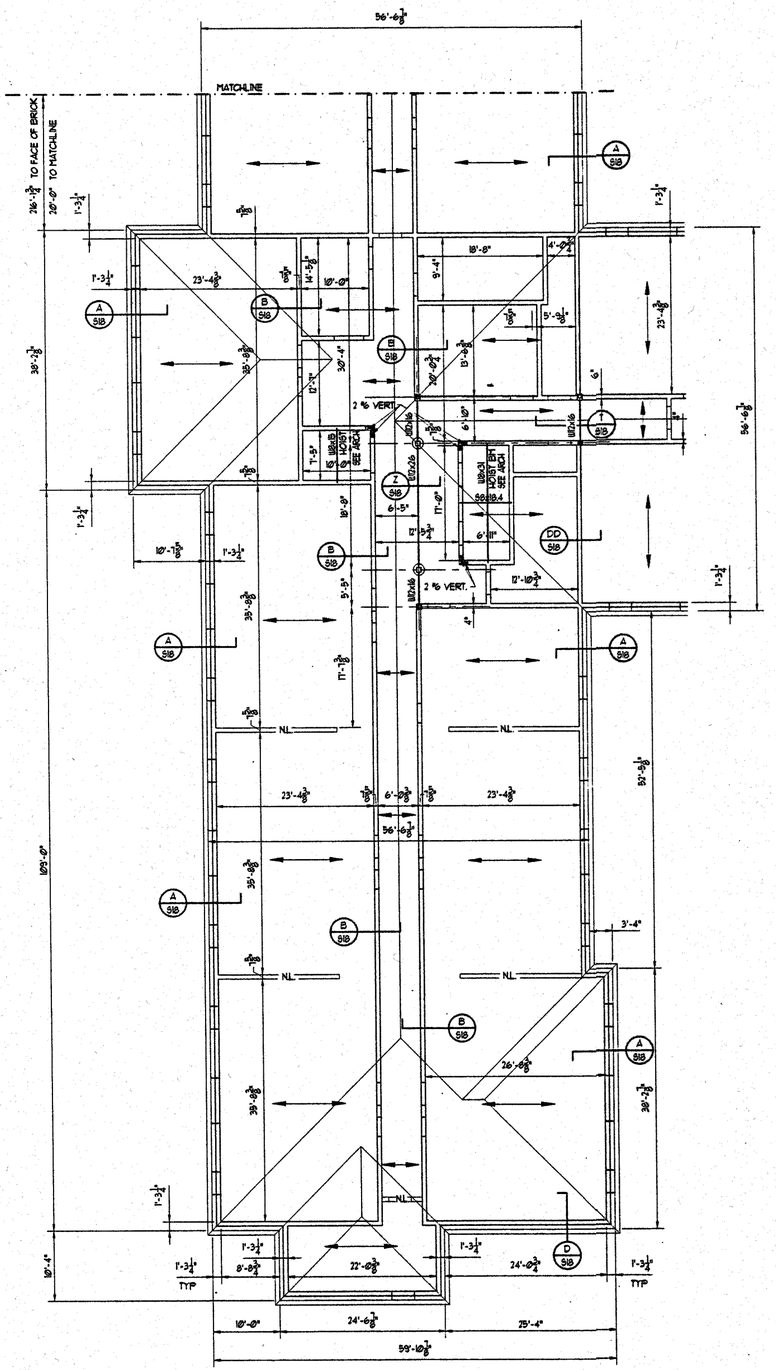

NORTH

ATTIC LEVEL PLAN - PART C

SCALE: 1/8" = 1'-0"

ATTIC LEVEL FRAMING NOTES:

TOP OF SLAB (FINISH FLOOR) ELEVATION 752.0' UNLESS NOTED OTHERWISE.

6" HOLLOW CORE PRECAST SLAB.

TOP OF STEEL BEAM ELEVATION 752.0' UNLESS NOTED OTHERWISE.

ROOF CONSTRUCTION: PROVIDE PRE-ENGINEERED ROOF STRUCTURE. SEE ARCH. DRAWINGS.

DESIGN ATTIC PRECAST SLAB TO SUPPORT PRE-ENGINEERED ROOF AS A UNIFORM LOAD. NOTICE MECHANICAL LOADS ON ATTIC FLOOR.

SEE ARCHITECTURAL DRAWINGS FOR LOCATIONS OF ATTIC ACCESS.

NOTE ALL STRUCTURAL STEEL SHALL HAVE SPRAY ON FIREPROOFING, UNLESS NOTED OTHERWISE. SEE SPECIFICATIONS.

NOTIFY PRECAST MANUFACTURER OF ANY SLAB OPENINGS GREATER THAN 12"ø NOT LOCATED ON DRAWINGS.

DO NOT BEAR ROOF FRAMING ON HOIST BEAMS.

TYPICAL LINTEL DETAIL SHALL BE SIMILAR TO SECTION R/S18.

STATE OF ALABAMA REGISTERED ARCHITECTS

ALABAMA REGISTERED PROFESSIONAL ENGINEER ROBERT H. HODNETT

WEST CAMPUS LIVING/LEARNING COMPLEX
ALABAMA A&M UNIVERSITY

SMITH, KRANERT, TOMBLIN & ASSOCIATES A. I. A. ARCHITECTS, P.C.
FLORENCE HUNTSVILLE ALABAMA

JOB NUMBER

MSH / SHH / 8-21-98
DRAWN BY-CHECKED BY-DATE

REVISED

SHEET TITLE

ATTIC LEVEL FRAMING PLAN PARTS B & C

SHEET NUMBER

S14 OF 23 OF

ACTIVITY BUILDING STEEL COLUMN SCHEDULE

NUMBER	A19	Ax19,Cx19	D19	A27	Ax27,Cx27	D27	J3	J5,J7,J9,J10	J12	Q3	Q5	Q7,Q9,Q10	Q12	L12	P12	R4,T4	V4	T6	V6	R6,R8	T8	V8	R10	T10	V10	R12	T12
COLUMN SHAPE: CAP PLATE																											
19'-1 1/2"																											
17'-3"																											
14'-8 1/2"																											
MAIN FLOOR Ø.0	T56x6x1/4	T56x6x1/4	T56x6x1/4	T56x6x1/4	T56x6x1/4 OFFSET COLUMN LINE 1 1/2"	T56x6x1/4	T56x8x5/16	T56x8x5/16	T56x8x5/16	T56x6x3/16	T56x6x1/4	T56x6x1/4	T56x6x3/16	T56x6x1/4	T56x6x1/4	T55x5x3/16	T55x5x3/16	T55x5x3/16	T55x5x3/16	T55x5x3/16	T55x5x3/16	T55x5x3/16	T55x5x3/16	T55x5x3/16	T55x5x3/16	T55x5x3/16	T55x5x3/16
BASE PLATE	3/4x12x12	3/4x12x12	3/4x12x12	3/4x12x12	3/4x12x12	3/4x12x12	3/4x14x14	3/4x14x14	3/4x14x14	3/4x12x12	3/4x12x12	3/4x12x12	3/4x12x12	3/4x12x12	3/4x12x12	3/4x12x12	3/4x12x12	3/4x12x12	3/4x12x12	3/4x12x12	3/4x12x12	3/4x12x12	3/4x12x12	3/4x12x12	3/4x12x12	3/4x12x12	3/4x12x12
FOUNDATION ELEVATION	11'0.0'	11'0.0'	11'0.0'	11'0.0'	11'0.0'	11'0.0'	11'.33'	11'.33'	11'.33'	11'.33'	11'.33'	11'.33'	11'.33'	11'.33'	11'.33'	11'.33'	11'.33'	11'0.6'T	11'.33'	11'.33'	11'.33'	11'.33'	11'.33'	11'0.6'T	11'.33'	11'.33'	11'.33'
HOOKED ANCHOR BOLTS	4- 3/4"x12	4- 3/4"x12	4- 3/4"x12	4- 3/4"x12	4- 3/4"x12	4- 3/4"x12	4- 3/4"x12	4- 3/4"x12	4- 3/4"x12	4- 3/4"x12	4- 3/4"x12	4- 3/4"x12	4- 3/4"x12	4- 3/4"x12	4- 3/4"x12	4- 3/4"x12	4- 3/4"x12	4- 3/4"x12	4- 3/4"x12	4- 3/4"x12	4- 3/4"x12	4- 3/4"x12	4- 3/4"x12	4- 3/4"x12	4- 3/4"x12	4- 3/4"x12	4- 3/4"x12
PEDESTAL SIZE							18 x 18	18 x 18	18 x 18	18 x 18				18 x 18		18 x 18	18 x 18		18 x 18			18 x 18			18 x 18		
VERTICAL BARS							4 # 7	4 # 7	4 # 7	4 # 7				4 # 7		4 # 7	4 # 7		4 # 7			4 # 7			4 # 7		
TIES							#3 @ 12"	#3 @ 12"	#3 @ 12"	#3 @ 12"				#3 @ 12"		#3 @ 12"	#3 @ 12"		#3 @ 12"			#3 @ 12"			#3 @ 12"		

NOTE: SEE TABLES ON FOUNDATION PLANS FOR FOOTING SIZES AND REINFORCING.

ACTIVITY BUILDING STEEL COLUMN SCHEDULE

NUMBER	U11	V12	Q13	R13	T13	U13	V13	V14.5	U14.5	U12,U16.8,U17	N16	Q16,R16,T16,U16	V16	E17	F17,G17,H17,J17	M17	N17	Q17	R17,U17	S17	V17	V18	U18	E22,E24	G22,G24	H22,H24	J22,J24
COLUMN SHAPE: CAP PLATE																											
35'-8"																											
17'-3"										2-1/2" COLUMN U12 ONLY																	
14'-8 1/2"									2-1/2"	2-1/2"																	
13'-1" MAIN FLOOR Ø.0	T55x5x3/16	T55x5x3/16	T55x5x3/16	T55x5x3/16	T55x5x3/16	T55x5x3/16	T55x5x3/16	T55x5x3/16	T55x5x3/16	T55x5x3/16	T55x5x3/16	T55x5x3/16	T55x5x3/16	T55x5x3/16	T55x5x3/16	T55x5x3/16	T55x5x3/16	T55x5x3/16	T55x5x3/16	T56x6x1/4	T55x5x3/16	T56x6x3/16	T56x6x3/16	T55x5x3/16	T5 1x1x5/16	T5 1x1x1/4	T5 1x1x1/4
BASE PLATE	3/4x12x12	3/4x12x12	3/4x12x12	3/4x12x12	3/4x12x12	3/4x12x12	3/4x12x12	3/4x12x12	3/4x12x12	3/4x12x12	3/4x12x12	3/4x12x12	3/4x12x12	3/4x12x12	3/4x12x12	3/4x12x12	3/4x12x12	3/4x12x12	3/4x12x12	1x12x12	3/4x12x12	3/4x12x12	3/4x12x12	3/4x12x12	1x13x13	1x13x13	1x13x13
FOUNDATION ELEVATION	11'.33'	11'.33'	11'.33'	11'.33'	11'.33'	11'.33'	11'.33'	11'.33'	11'.33'	11'.33'	11'.33'	11'.33'	11'.33'	11'.33'	11'.33'	11'.33'	11'.33'	11'.33'	11'.33'	11'.33'	11'.33'	11'.33'	11'.33'	11'.33'	11'.33'	11'.33'	11'.33'
HOOKED ANCHOR BOLTS	4- 3/4"x12	4- 3/4"x12	4- 3/4"x12	4- 3/4"x12	4- 3/4"x12	4- 3/4"x12*	4- 3/4"x12*	4- 3/4"x12*	4- 3/4"x12*	4- 3/4"x12	4- 3/4"x12	4- 3/4"x12	4- 3/4"x12	4- 3/4"x12	4- 3/4"x12	4- 3/4"x12	4- 3/4"x12	4- 3/4"x12	4- 3/4"x12	4- 3/4"x12	4- 3/4"x12	4- 3/4"x12	4- 3/4"x12	4- 3/4"x12	4- 3/4"x12	4- 3/4"x12	4- 3/4"x12
PEDESTAL SIZE	18 x 18								18 x 18	18 x 18				18 x 18	18 x 18	18 x 18						18 x 18	18 x 18				
VERTICAL BARS	4 # 7								4 # 7	4 # 7				4 # 7	4 # 7	4 # 7						4 # 7	4 # 7				
TIES	#3 @ 12"								#3 @ 12"	#3 @ 12"				#3 @ 12"	#3 @ 12"	#3 @ 12"						#3 @ 12"	#3 @ 12"				

NOTE: SEE TABLES ON FOUNDATION PLANS FOR FOOTING SIZES AND REINFORCING.

ACTIVITY BUILDING STEEL COLUMN SCHEDULE

NUMBER	M21	M23	N21	N25	Q21,Q25	Q23	V20,V26	E28	F28	G28,H28	J28,Q28	M28,N28	R28,U28	S28	V28	J29,Q29	M29,N29	L30,P30	L31,P31	Lx3,Nx3	K13,K14,K15	K14.5,K16.8	Kx16.8,L16.8	Kx13,Kx15,L15	Kx14.1,L13.1,L14	F14.5	F15
COLUMN SHAPE: CAP PLATE																											
35'-8"																											
17'-3"																											
10'-0"																					3" STD. PIPE	3" STD. PIPE					
MAIN FLOOR Ø.0	T5 1x1x1/4	T5 1x1x1/4	T5 1x1x1/4	T5 1x1x1/4	T56x6x1/4	T56x6x1/4	T56x6x5/16	T56x6x5/16	T56x6x5/16	T56x6x5/16	T56x6x5/16	T56x6x1/4	T56x6x5/16	T56x6x5/16	T56x6x1/4	T56x6x5/16	T56x6x1/4	T56x6x1/4	T56x6x1/4	T55x5x3/16	T55x5x3/16	T55x5x3/16	T55x5x3/16	T55x5x3/16	T55x5x3/16	T55x5x3/16	T55x5x3/16
BASE PLATE	1x13x13	1x13x13	1x13x13	1x13x13	3/4x12x12	1x14x14	3/4x12x12	3/4x12x12	3/4x12x12	3/4x12x12	3/4x12x12	3/4x12x12	3/4x12x12	1x12x12	3/4x12x12	3/4x12x12	1x14x14	3/4x12x12	3/4x12x12	1x14x14	3/4x12x12	3/4x12x12	3/4x12x12	3/4x12x12	3/4x12x12	3/4x12x12	3/4x12x12
FOUNDATION ELEVATION	11'.33'	11'.33'	11'.33'	11'.33'	11'.33'	11'.33'	11'.33'	11'.33'	11'.33'	11'.33'	11'.33'	11'.33'	11'.33'	11'.33'	11'.33'	11'.33'	11'.33'	11'.33'	11'.33'	11'.33'	11'.33'	11'.33'	11'.33'	11'.33'	11'.33'	11'.33'	11'.33'
HOOKED ANCHOR BOLTS	4- 3/4"x12	4- 3/4"x12	4- 3/4"x12	4- 3/4"x12	4- 3/4"x12	4- 3/4"x12	4- 3/4"x12*	4- 3/4"x12*	4- 3/4"x12	4- 3/4"x12	4- 3/4"x12	4- 3/4"x12	4- 3/4"x12	4- 3/4"x12	4- 3/4"x12	4- 3/4"x12	4- 3/4"x12	4- 3/4"x12	4- 3/4"x12	4- 3/4"x12	4- 3/4"x12	4- 3/4"x12	4- 3/4"x12	4- 3/4"x12	4- 3/4"x12	4- 3/4"x12	4- 3/4"x12
PEDESTAL SIZE	18 x 18	18 x 18	18 x 18	18 x 18	18 x 18	18 x 18	18 x 18	18 x 18	18 x 18	18 x 18	18 x 18	18 x 18	18 x 18	18 x 18	18 x 18	18 x 18	18 x 18	18 x 18	18 x 18				18 x 18	18 x 18	18 x 18		
VERTICAL BARS	4 # 7	4 # 7	4 # 7	4 # 7	4 # 7	4 # 7	4 # 7	4 # 7	4 # 7	4 # 7	4 # 7	4 # 7	4 # 7	4 # 7	4 # 7	4 # 7	4 # 7	4 # 7	4 # 7				4 # 7	4 # 7	4 # 7		
TIES	#3 @ 12"	#3 @ 12"	#3 @ 12"	#3 @ 12"	#3 @ 12"	#3 @ 12"	#3 @ 12"	#3 @ 12"	#3 @ 12"	#3 @ 12"	#3 @ 12"	#3 @ 12"	#3 @ 12"	#3 @ 12"	#3 @ 12"	#3 @ 12"	#3 @ 12"	#3 @ 12"	#3 @ 12"				#3 @ 12"	#3 @ 12"	#3 @ 12"		

NOTE: SEE TABLES ON FOUNDATION PLANS FOR FOOTING SIZES AND REINFORCING.

PART A — PART C

DORMITORY STEEL COLUMN SCHEDULE

NUMBER	C1	C2	C3	C4	C5	C6	C7	C8	C9	C10	C11	C12	C13	C14	C15	C16	C17	C18	C19	C20	C21	C22	C23	C24	C25
CAP PLATE	3/8" CLOSURE	3/8" CLOSURE	1/2"	1/2"	1/2"	1/2"	1/2"	3/8" CLOSURE	3/8" CLOSURE	3/8" CLOSURE	3/8" CLOSURE	3/8" CLOSURE	3/8" CLOSURE	1/2"	1/2"	1/2"	1/2"	1/2"	1/2"	1/2"	1/2"	1/2"	1/2"	1/2"	1/2"
COLUMN SHAPE: ATTIC LEVEL 50'-0"**																									
FIFTH FLOOR 40'-0"**																									
FOURTH FLOOR 30'-0"**																									
THIRD FLOOR 20'-0"**																									
SECOND FLOOR 10'-0"	T56x6x1/4	T58x8x5/16	T58x8x5/16	T58x8x1/4	T58x8x1/4	T56x6x1/4	T58x8x1/4	T54x4x1/4	T56x6x1/4	T58x8x1/4	T58x8x1/2	T56x6x5/16	T58x8x5/16												
FIRST FLOOR														T56x6x1/4	T56x6x3/16	T56x6x3/16	T56x6x3/16	T56x6x3/16	T54x4x1/4	T54x4x1/4	T58x8x1/4	T56x6x3/16	T56x6x3/16	T58x8x1/4	T54x4x1/4
BASE PLATE	12x12x3/4	14x14x1 1/4	14x14x1 1/4	14x14x1 1/4	14x14x1	14x14x1	14x14x1	12x12x3/4	12x12x1	14x14x1	14x14x1 3/8	12x12x1	12x12x1	12x12x1	12x12x3/4	12x12x3/4	12x12x3/4	12x12x1	12x12x3/4	12x12x3/4	12x12x3/4	12x12x1	12x12x1	12x12x2 1/4	12x12x3/4
FOUNDATION ELEVATION	11'.33'	11'.33'	11'0.6'T	11'0.6'T	11'0.6'T	11'0.6'T	11'0.6'T	11'0.6'T	11'0.6'T	11'.33'	11'.33'	11'0.6'T	11'0.6'T	11'0.6'T	11'0.6'T	11'0.6'T	11'.33'	11'.33'	11'0.6'T	11'0.6'T	11'.33'	11'0.6'T	11'.33'	11'0.0'	11'0.0'
HOOKED ANCHOR BOLTS	(4) 3/4 x 12	(4) 3/4 x 12	(4) 3/4 x 12	(4) 3/4 x 12	(4) 3/4 x 12	(4) 3/4 x 12	(4) 3/4 x 12	(4) 3/4 x 12	(4) 3/4 x 12	(4) 3/4 x 12	(4) 3/4 x 12	(4) 3/4 x 12	(4) 3/4 x 12	(4) 3/4 x 12	(4) 3/4 x 12	(4) 3/4 x 12	(4) 3/4 x 12	(4) 3/4 x 12	(4) 3/4 x 12	(4) 3/4 x 12	(4) 3/4 x 12	(4) 3/4 x 12	(4) 3/4 x 12	(4) 3/4 x 12	(4) 3/4 x 12
PEDESTAL SIZE	12x16	18x18	—	—	—	—	—	—	—	16x16	16x16	—	—	—	—	—	16 x 16	16 x 16	—	—	12 x 16	—	16 x 16	—	—
VERTICAL BARS	—	4 # 7	—	—	—	—	—	—	—	4 # 7	4 # 7	—	—	—	—	—	4 # 7	4 # 7	—	—	4 # 7	—	4 # 7	—	—
TIES	—	#3 @ 12"	—	—	—	—	—	—	—	#3 @ 12"	#3 @ 12"	—	—	—	—	—	#3 @ 12"	#3 @ 12"	—	—	#3 @ 12"	—	#3 @ 12"	—	—
FOOTING SIZE, WL xD	6'-0" x 6'-0" x 1'-2"	9'-6" x 9'-6" x 1'-10"	10'-6" x 10'-6" x 2'-1"	10'-0" x 10'-0" x 2'-0"	8'-6" x 8'-6" x 1'-8"	8'-6" x 8'-6" x 1'-8"	10'-0" x 10'-0" x 2'-0"	6'-0" x 6'-0" x 1'-2"	7'-0" x 7'-0" x 1'-8"	10'-0" x 10'-0" x 2'-0"	11'-0" x 11'-0" x 2'-2"	8'-0" x 8'-0" x 1'-8"	8'-0" x 8'-0" x 1'-8"	8'-0" x 8'-0" x 1'-8"	6'-6" x 6'-6" x 1'-4"	6'-6" x 6'-6" x 1'-4"	6'-6" x 6'-6" x 1'-4"	7'-6" x 7'-6" x 1'-6"	4'-0" x 4'-0" x 1'-0"	4'-0" x 4'-0" x 1'-0"	5'-0" x 5'-0" x 1'-0"	7'-6" x 7'-6" x 1'-6"	7'-6" x 7'-6" x 1'-6"	4'-0" x 4'-0" x 1'-0"	4'-0" x 4'-0" x 1'-0"
REINFORCING (# EA WAY)	12 # 6	16 # 8	13 # 8	16 # 8	16 # 7	16 # 7	16 # 8	12 # 6	14 # 6	16 # 8	20 # 8	14 # 7	14 # 7	14 # 7	14 # 6	14 # 6	14 # 6	16 # 6	8 # 5	8 # 5	8 # 6	16 # 6	16 # 6	8 # 5	8 # 5

NOTCH FED. SEE PLAN

NOTE: ALL COLUMNS REQUIRE 1 1/2" CONCRETE COVERAGE (MINIMUM) FOR 1 HOUR FIRE RATING, EXCEPT T58x8x5/16 AND T58x8x1/2 WHICH REQUIRE 1" CONCRETE COVERAGE.
PROVIDE ONE LAYER OF 6x6 W2.9/W2.9 W.W.F. AROUND COLUMNS ENCASED IN CONCRETE, EXCEPT 18"ø CONC. WRAPPED COLUMNS SHALL HAVE TWO LAYERS OF 6x6 W2.9/W2.9 W.W.F.

STATE OF ALABAMA — GEORGE R. SMITH — REGISTERED ARCHITECT

ALABAMA REGISTERED PROFESSIONAL ENGINEER No. 10452 — ROBERT H. HOOVER III

WEST CAMPUS LIVING/LEARNING COMPLEX
ALABAMA A&M UNIVERSITY

SMITH, KRANERT, TOMBLIN & ASSOCIATES
A. I. A.
ARCHITECTS, P.C.
HUNTSVILLE
FLORENCE
ALABAMA

JOB NUMBER

1/31/11 — 8-21-85
DRAWN BY CHECKED BY DATE

REVISED

SHEET TITLE
COLUMN SCHEDULES

SHEET NUMBER
S15
OF 23

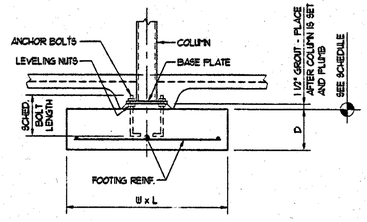

TYPICAL COLUMN BASE & FOOTING DETAIL

SCALE: 3/4" = 1'-0"

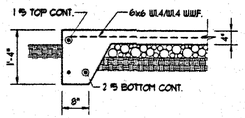

TYP. TURN DOWN SLAB DETAIL

SCALE: 3/4" = 1'-0"

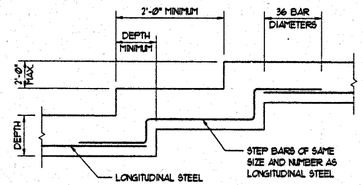

TYPICAL FOOTING STEP DETAIL

SCALE: 3/4" = 1'-0"

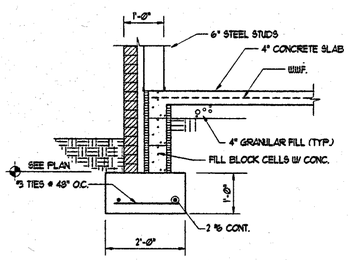

SECTION A/S16

SCALE: 3/4" = 1'-0"

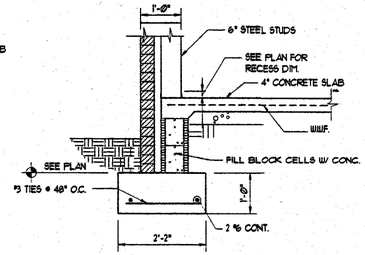

SECTION B/S16

SCALE: 3/4" = 1'-0"

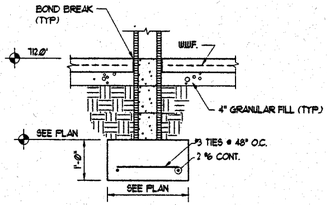

SECTION C/S16

SCALE: 3/4" = 1'-0"

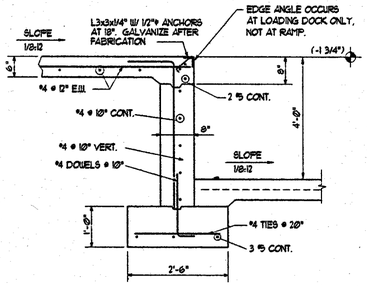

SECTION D/S16

SCALE: 3/4" = 1'-0"

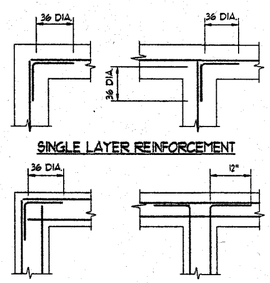

SINGLE LAYER REINFORCEMENT

DOUBLE LAYER REINFORCEMENT

CORNER REINFORCING

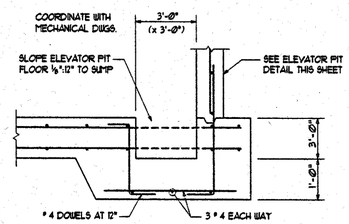

SUMP PIT DETAIL

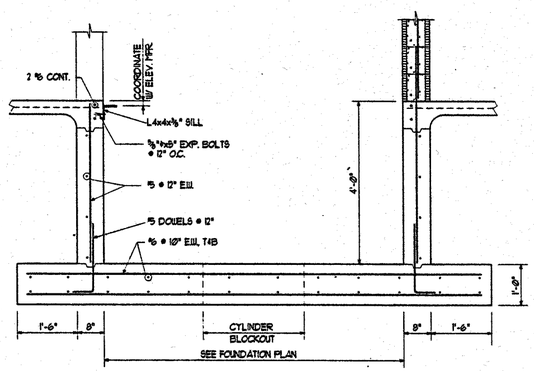

ELEVATOR PIT DETAIL F/S16 3/4"=1'-0"

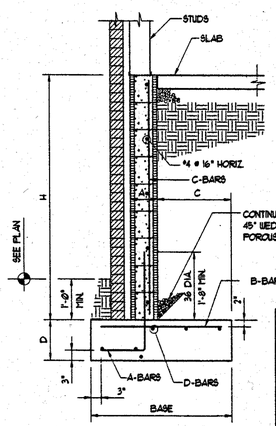

NOTE: SEE SITE PLAN FOR LOCATION OF RETAINING WALLS.

SECTION E/S16

SCALE: 3/4" = 1'-0"

RETAINING WALL SCHEDULE

DIMENSIONS (FT. & IN.)					REINFORCEMENT				REMARKS
H	A	C	BASE	D	A-BARS	B-BARS	C-BARS	D-BARS	
-	-	-	-	-	-	-	-	-	
4'-0"	8"	1'-6"	3'-0"	1'-0"	#4@32"	#4@16"	#4@32"	4 #5	
5'-4"	8"	1'-6"	3'-0"	1'-0"	#4@24"	#4@16"	#4@24"	4 #5	

GENERAL NOTES

1. DESIGN CRITERIA:
   A. CODES:
      BUILDING CODE REQUIREMENTS FOR REINFORCED CONCRETE (A.C.I. 318).
      BUILDING CODE REQUIREMENTS FOR MASONRY STRUCTURES (A.C.I. 530).
      SPECIFICATION FOR THE DESIGN, FABRICATION AND ERECTION STRUCTURAL STEEL FOR BUILDINGS, (A.I.S.C. LATEST EDITION).
      STANDARD BUILDING CODE.
   B. DESIGN LIVE LOADS (PSF):
      ROOF----------20
      APARTMENTS----------40
      OFFICES----------50
      READING ROOMS----------60
      STAIRS, EXITWAYS----------100
      CORRIDORS ABOVE 1ST FLOOR----80
      STORAGE----------125
      OTHER AREAS----------100
      LATERAL FORCES: IN COMPLIANCE WITH STD. BLDG. CODE.
   C. FOUNDATION:
      MAXIMUM BEARING PRESSURES (PSF):
      COLUMN FOOTINGS----3000
      CONT. WALL FOOTINGS------2500
2. SUBMIT ALL SHOP DRAWINGS ON ONE REPRODUCIBLE PRINT (SEPIA) AND ONE BLUELINE PRINT. THE REPRODUCIBLE PRINT WILL BE RETURNED. ALL BLUE LINE PRINTS REQUIRED BY THE CONTRACTOR ARE THE RESPONSIBILITY OF THE CONTRACTOR.
3. ALL DETAILS SHOWN ARE TYPICAL. SIMILAR DETAILS APPLY TO SIMILAR CONDITIONS, UNLESS SHOWN OTHERWISE.
4. COMPACTED FILL WITHIN THE BUILDING AREA (AND EXTENDING 10'- 0" OUTSIDE THE EXTERIOR BUILDING LINE) SHALL MEET THE FOLLOWING REQUIREMENTS:
   A. PLASTICITY INDEX LESS THAN 30.
   B. MAXIMUM SIZE STONE 4 INCHES.
   C. SOIL FREE OF ORGANIC MATERIAL.
   D. PLACE IN 8 INCH LOOSE LIFTS.
   E. COMPACT TO 95 PERCENT OF STANDARD PROCTOR MAXIMUM DRY DENSITY.
   F. FIELD DENSITY TEST FOR EACH 2500 SQUARE FEET PER FOOT OF FILL.
5. 4" GRANULAR FILL UNDER ALL SLABS.
6. BACKFILL FOR FOUNDATION AND RETAINING WALLS SHALL BE A FREE DRAINING GRANULAR MATERIAL, SUCH AS SIZE #57 STONE. BACKFILL SHALL BE COMPACTED SUFFICIENTLY TO PREVENT SUBSIDENCE OF SURFACE ADJACENT TO WALL. THE GRANULAR MATERIAL SHALL BE PLACED IN A 45 DEGREE WEDGE EXTENDING FROM THE BASE OF THE WALL.
7. CONCRETE MASONRY UNIT COMPRESSIVE STRENGTH: 1800 PSI MINIMUM AT 28 DAYS.
8. CONCRETE COMPRESSIVE STRENGTH: 3000 PSI MINIMUM AT 28 DAYS.
9. REINFORCING BARS: ASTM A615 GRADE 60.
10. WELDED WIRE FABRIC (WWF.): ASTM A185.
11. REINFORCING BAR PLACING ACCESSORIES: IN ACCORDANCE WITH C.R.S.I. SPECIFICATIONS, AND AS FOLLOWS:
    COLUMNS AND PEDESTALS --2" B.B. HORIZ. AT 4'-0" ALL FACES.
    WHERE CONCRETE IS EXPOSED IN FINISHED BUILDING, PROVIDE ACCESSORIES WITH RUSTPROOF LEGS.
12. DETAIL REINFORCING IN ACCORDANCE WITH A.C.I. 318. REINFORCING SHALL NOT BE WELDED IN ANY MANNER UNLESS NOTED ON DRAWINGS OR APPROVED BY THE ENGINEER. WHERE SPLICES IN REINFORCING ARE NECESSARY, REINFORCING SHALL BE LAPPED A MINIMUM OF 36 BAR DIAMETERS.
13. CONCRETE COVERAGE OF REINFORCEMENT:
    FOOTINGS----------3" BOTTOM & SIDES, 2" TOP
    GRADE BEAMS----------3" BOTTOM & SIDES, 2" TOP
    WALLS----------1-1/2"
    PEDESTALS----------1-1/2" CLEAR OF TIES
    COLUMNS----------1-1/2" CLEAR OF TIES
    BEAMS----------1-1/2" CLEAR OF STIRRUPS
    SLABS----------3/4"
14. WHERE NOT SHOWN OTHERWISE, CONTINUOUS WALL FOOTINGS SHALL BE 1'-0" DEEP WITH 2 # 6 CONTINUOUS AND # 3 TIES AT 4'-0" BOTTOM.
15. PEDESTAL, COLUMN AND WALL REINFORCING: DOWEL TO FOUNDATION WITH HOOKED BARS OF SAME SIZE AND SPACING AS VERTICAL REINFORCING.
16. BEAM AND SLAB TOP BARS: EXTEND INTO SUPPORT IN ACCORDANCE WITH A.C.I. STANDARD 318 (CODE). WHERE SUCH EXTENSION IS NOT OBTAINABLE, TERMINATE THE BAR IN A STANDARD RECOMMENDED 90 DEGREE HOOK.
17. EARTH SUPPORTED SLABS: (INCLUDING EXTERIOR WALK AND DRIVE SLABS) 4" THICK, REINFORCED WITH 6x6 W1.4/W1.4 WWF. AT MID-DEPTH OF SLAB, UNLESS SHOWN OTHERWISE.
18. CONCRETING OPERATIONS SHALL COMPLY WITH A.C.I. STANDARDS.
19. BEAMS AND SLABS SHALL HAVE NO HORIZONTAL JOINTS. ANY STOP IN CONCRETE WORK MUST BE MADE AT CENTER OF SPAN WITH VERTICAL BULKHEAD AND KEYED, UNLESS SHOWN OTHERWISE.
20. STRUCTURAL STEEL: ASTM A36.
21. STEEL TUBING: ASTM A500, GRADE B.
22. STEEL PIPE: ASTM A53, TYPE E OR S, GRADE B.
23. WELDED CONNECTIONS: E70XX ELECTRODES, MINIMUM SIZE FILLET WELD 3/16".
24. BOLTED CONNECTIONS: BEARING TYPE A325-N, IN ACCORDANCE WITH A.I.S.C. "SPECIFICATION FOR STRUCTURAL JOINTS USING ASTM A325 OR A490 BOLTS". BOLTS THROUGH 4" WIDE BEAM FLANGES SHALL BE 5/8" DIAMETER. OTHER BOLTS SHALL BE 3/4" DIAMETER.
25. FABRICATE AND ERECT ALL STRUCTURAL STEEL IN ACCORDANCE WITH A.I.S.C. "SPECIFICATION FOR THE DESIGN, FABRICATION AND ERECTION OF STRUCTURAL STEEL FOR BUILDINGS".
26. WHERE STEEL BEAMS ARE CONTINUOUS OVER COLUMNS, PROVIDE WEB STIFFENER PLATES EACH SIDE OF BEAM WEB, OF THICKNESS EQUAL TO BEAM FLANGE THICKNESS, LOCATED IN ALIGNMENT WITH COLUMN WEB OR FLANGES.
27. FABRICATE CROSS BRACING WITH SUFFICIENT DRAW TO PREVENT SAGGING.
28. THE STEEL FRAME IS "NON-SELF-SUPPORTING". ADEQUATE TEMPORARY SUPPORT MUST BE PROVIDED BY THE CONTRACTOR UNTIL REQUIRED CONNECTIONS OR ELEMENTS ARE IN PLACE.
29. DESIGN, FABRICATE AND ERECT STEEL JOISTS IN ACCORDANCE WITH THE STEEL JOIST INSTITUTE STANDARD SPECIFICATIONS AND LOAD TABLES.
30. AT JOISTS PARALLEL TO MASONRY WALLS, ANCHOR BRIDGING ROWS TOP AND BOTTOM BY WELDING TO HOOKED BAR 2"x1/4" EMBEDDED IN THE WALL.
31. AT JOISTS PARALLEL TO BEAMS, ANCHOR BRIDGING ROWS BY WELDING TO BEAMS.
32. DESIGN ROOF JOISTS TO RESIST A NET UPLIFT FORCE OF 6 POUNDS PER SQUARE FOOT OF ROOF.
33. LINTELS AT OPENINGS IN MASONRY WALLS (UNLESS SHOWN OTHERWISE):
    AT CONCRETE BLOCK:
    SPANS UP TO 3'6" - 8" DEEP CHANNEL BLOCK FILLED WITH CONCRETE, REINFORCED WITH #4 IN BOTTOM.
    SPANS 3'6" TO 5'0" - 8" DEEP CHANNEL BLOCK FILLED WITH CONCRETE, REINFORCED WITH 2 #5 IN BOTTOM.
    SPANS 5'0" TO 8'0" - 8" DEEP CHANNEL BLOCK, 8" DEEP FORM BLOCK FILLED WITH CONCRETE, REINFORCED WITH 2 #6 TOP AND BOTTOM.
    AT BRICK VENEER, PROVIDE LINTEL AS NOTED ON DRAWINGS.
    PROVIDE A MINIMUM BEARING OF 4" EACH END PLUS 1" FOR EACH FOOT OF OPENING WIDTH GREATER THAN 4'-0".
34. AT LINTELS AND BEAMS SPANNING MORE THAN 6'-0", FILL CELLS OF MASONRY WITH CONCRETE UNDER BEARING ENDS, FROM FOUNDATION TO LINTEL OR BEAM.
35. AT CORNERS AND INTERSECTIONS OF BOND BEAMS IN WALLS, PROVIDE BARS WITH 90 DEGREE HOOKS, (12" LONG) TO TIE WALLS TOGETHER.
36. REINFORCE EXTERIOR MASONRY CORNERS WITH #5 VERTICAL, GROUTED IN BLOCK CELL. PROVIDE HOOKED DOWEL IN FOOTING. PROVIDE 90 DEGREE HOOK IN BOND BEAM AT TOP OF WALL.
37. WHERE MASONRY CONSTRUCTION IS REINFORCED WITH VERTICAL BAR REINFORCING, FILL CELLS OF MASONRY WITH CONCRETE PLACED IN 4'0" MAXIMUM LIFT. LAP BAR SPLICES 30 BAR DIAMETERS, MINIMUM.
38. EXPANSION BOLTS INTO CONCRETE SHALL BE WEDGE ANCHORS EQUAL TO "REI-IT CONCRETE ANCHORS", PHILLIPS "RED HEAD" TYPE WS, OR MOLLY "PARABOLT" CONCRETE ANCHORS.
39. ROOF DECK: TYPE "B" GALVANIZED STEEL ROOF DECK, 22 GAUGE, 1-1/2" DEEP.
40. DESIGN, FABRICATE AND ERECT LIGHT GAUGE STEEL TRUSSES IN ACCORDANCE WITH THE "SPECIFICATION FOR THE DESIGN OF COLD-FORMED STEEL STRUCTURAL MEMBERS" OF THE AMERICAN IRON AND STEEL INSTITUTE.
41. TIE ALL MASONRY TO STRUCTURAL STEEL WITH ADJUSTABLE WIRE TIES AT 32" O.C., UNLESS NOTED OTHERWISE IN SPECIFICATIONS.

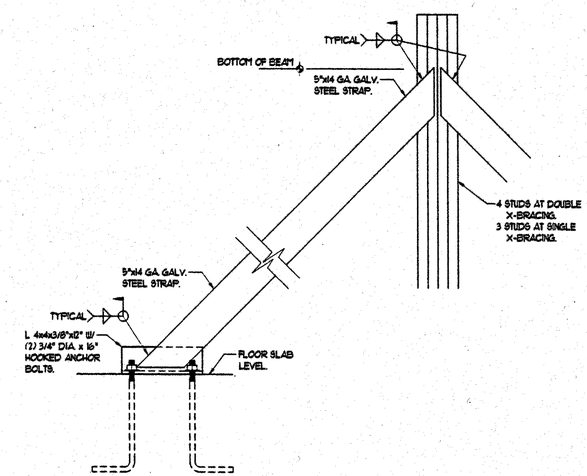

TYPICAL STRAP X-BRACING DETAILS

SCALE: 1 1/2" = 1'-0"

STATE OF ALABAMA — REGISTERED ARCHITECTS

ALABAMA — REGISTERED — No. 10452 — PROFESSIONAL ENGINEER — ROBERT H. HOGWATT

WEST CAMPUS LIVING/LEARNING COMPLEX
ALABAMA A&M UNIVERSITY

SMITH, KRANERT, TOMBLIN & ASSOCIATES
ARCHITECTS, P.C.
A.I.A.
ALABAMA
HUNTSVILLE
FLORENCE

JOB NUMBER

JPM / RHH / 8-21-95
DRAWN BY - CHECKED BY - DATE

REVISED

SHEET TITLE
STANDARD SECTIONS & GENERAL NOTES

SHEET NUMBER
S16
OF
23
CP

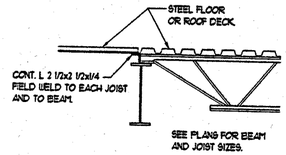

TYPICAL DECK SUPPORT DETAIL
SCALE: 3/4" = 1'-0"

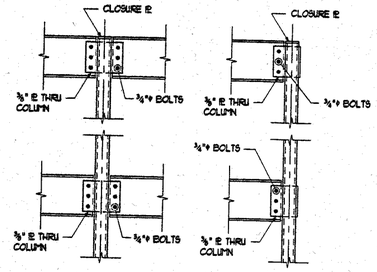

BEAM-COLUMN CONNECTION DETAILS

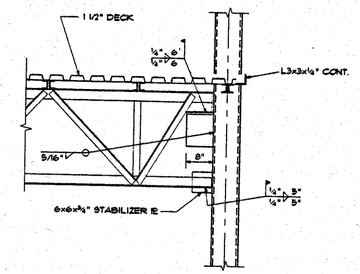

SECTION
SCALE: 3/4" = 1'-0" (A / S17)

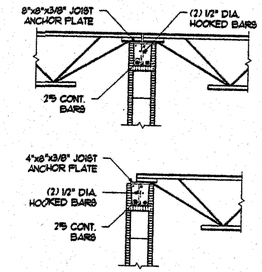

JOIST BEARING DETAIL

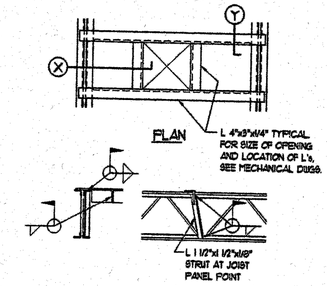

ROOF EQUIPMENT & OPENING FRAME DETAIL
REQUIRED AT OPENINGS THRU ROOF DECK WHERE OPENING IS LARGER THAN 12"x12", OR WHERE WEIGHT OF SUPPORTED EQUIPMENT IS MORE THAN 100 POUNDS.

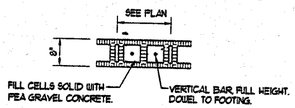

TYPICAL REINF. MASONRY DETAIL (RM.)
SCALE: 3/4" = 1'-0"

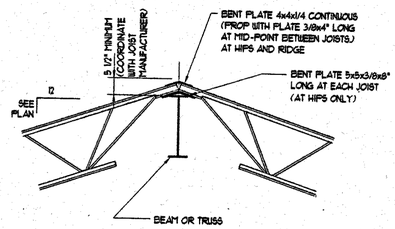

TYPICAL RIDGE/HIP SECTION
SCALE: 3/4" = 1'-0"
TYPICAL RIDGE BEAM

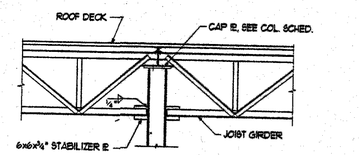

TYPICAL GIRDER/ COLUMN CONNECTION DETAIL
SCALE: 3/4"=1'-0"

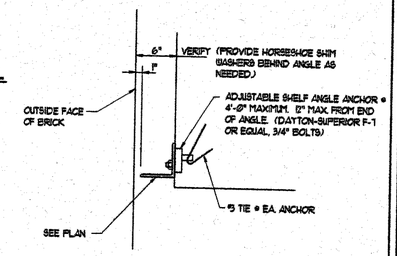

BRICK SHELF ANGLE DETAIL
SCALE: 1 1/2"=1'-0"

ADJUSTABLE ANGLE ANCHORS USED AT THIRD FLOOR ONLY. ANGLES SHALL BE GALVANIZED. PROVIDE 1/2" GAP BETWEEN ANGLE PIECES. BREAK ANGLES AT CONTROL AND EXPANSION JOINTS. SEE ARCHITECTURAL DRAWINGS FOR LOCATIONS OF JOINTS.

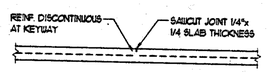

SAWED CONTROL JOINT
SAW JOINTS WITHIN 8 HOURS AFTER CONCRETE IS PLACED.

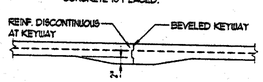

KEYED CONTROL JOINT
USE EITHER AT CONTRACTOR'S OPTION.

TYPICAL SLAB CONTROL JOINT DETAILS
SCALE: 3/4" = 1'-0"

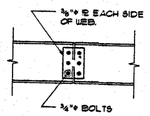

BEAM SPLICE

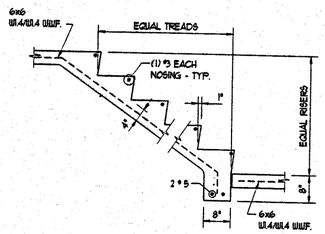

TYPICAL STEPS ON GRADE DETAIL
SCALE: 3/4" = 1'-0"

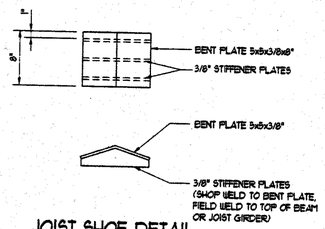

JOIST SHOE DETAIL
SCALE: 1 1/2" = 1'-0"

JOIST SHOE DETAIL AT TYPICAL RIDGE/HIP DETAIL

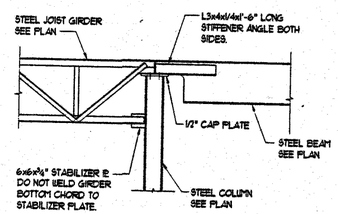

TYPICAL GIRDER/BEAM CONNECTION DETAIL
SCALE: 3/4"=1'-0"

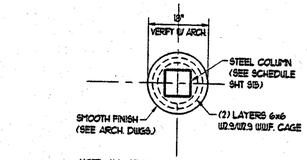

NOTE: ALL OTHER CONCRETE ENCASED COLUMNS SHALL HAVE (1) LAYER 6x6 W2.9/W2.9 W.W.F.

TYPICAL CIRCULAR CONCRETE COLUMN
SCALE: 3/4" = 1'-0"

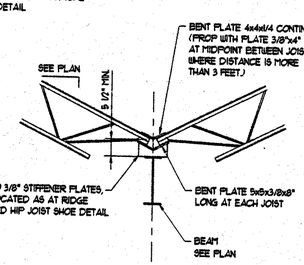

TYPICAL VALLEY SECTION
SCALE: 3/4" = 1'-0"

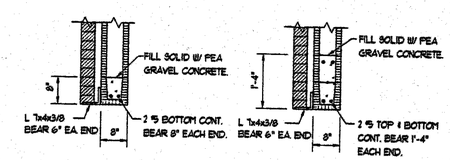

TYPICAL MASONRY LINTEL DETAILS
SCALE: 3/4" = 1'-0"

VERIFY LINTEL ANGLES WITH ARCHITECTURAL DETAILS
THIS DETAIL APPLIES TO DORMITORY ONLY.

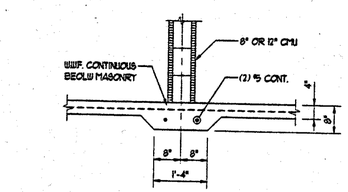

TYPICAL THICKENED SLAB DETAIL BELOW INTERIOR MASONRY PARTITIONS
SCALE: 3/4" = 1'-0"

TO BE LOCATED BELOW MASONRY PARTITIONS EXCEEDING 10'-0" IN HEIGHT, UNLESS SHOWN OTHERWISE ON PLAN.

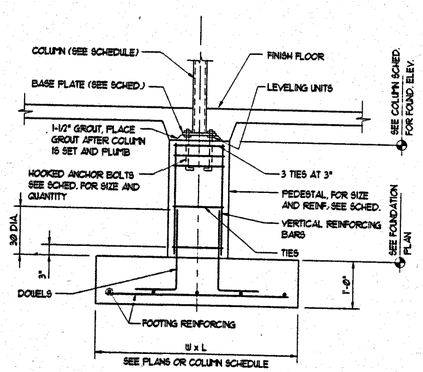

COLUMN BASE, PEDESTAL & FOOTING DETAIL

WEST CAMPUS LIVING/LEARNING COMPLEX
ALABAMA A&M UNIVERSITY

SMITH, KRANERT, TOMBLIN & ASSOCIATES
A. I. A.
ARCHITECTS, P.C.
FLORENCE ALABAMA HUNTSVILLE

STATE OF ALABAMA REGISTERED ARCHITECTS

ALABAMA REGISTERED PROFESSIONAL ENGINEER No. 10452 ROBERT H. HONEYCUTT

JOB NUMBER

DRAWN BY: EWH / DATE: 8-21-99
DRAWN BY-CHECKED BY-DATE

REVISED

SHEET TITLE
STANDARD SECTIONS AND DETAILS

SHEET NUMBER
S17
OF 23

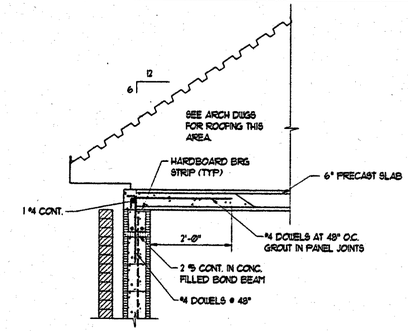

SECTION A 518
SCALE: 3/4" = 1'-0"

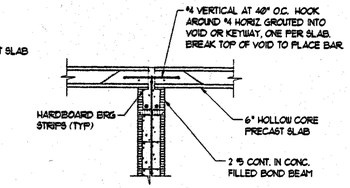

SECTION B 518
SCALE: 3/4" = 1'-0"

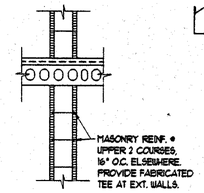

SECTION C 518
SCALE: 3/4" = 1'-0"

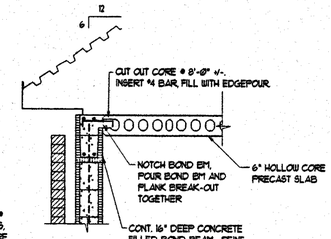

SECTION D 518
SCALE: 3/4" = 1'-0"

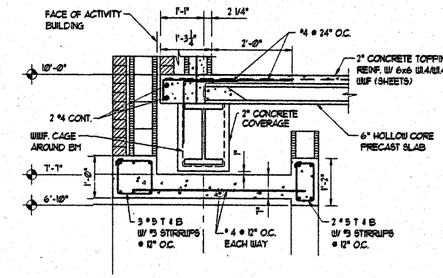

SECTION E 518
SCALE: 3/4" = 1'-0"

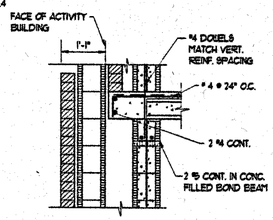

SECTION AA 518
SCALE: 3/4" = 1'-0"

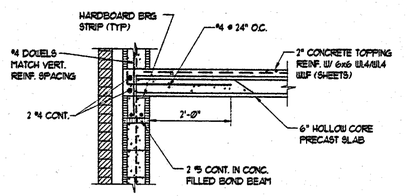

SECTION F 518
SCALE: 3/4" = 1'-0"

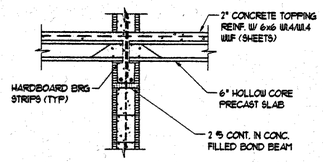

SECTION G 518
SCALE: 3/4" = 1'-0"

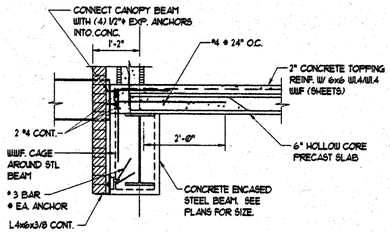

SECTION H 518
SCALE: 3/4" = 1'-0"

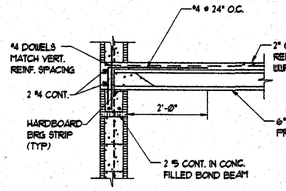

SECTION J 518
SCALE: 3/4" = 1'-0"

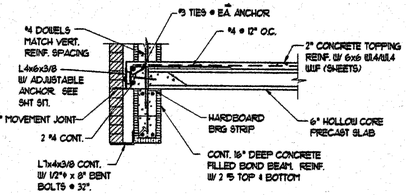

SECTION BB 518
SCALE: 3/4" = 1'-0"

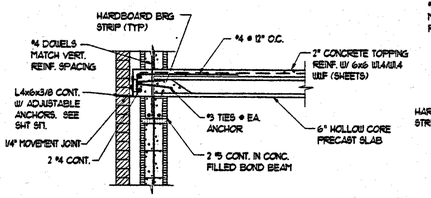

SECTION K 518
SCALE: 3/4" = 1'-0"

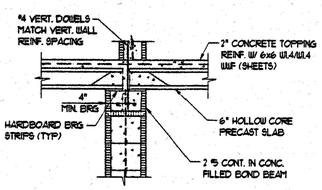

SECTION L 518
SCALE: 3/4" = 1'-0"

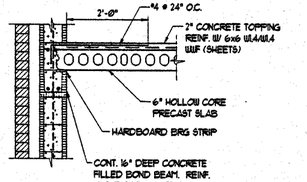

SECTION M 518
SCALE: 3/4" = 1'-0"

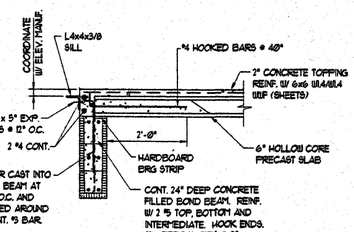

SECTION N 518
SCALE: 3/4" = 1'-0"

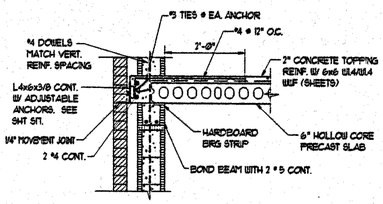

SECTION CC 518
SCALE: 3/4" = 1'-0"

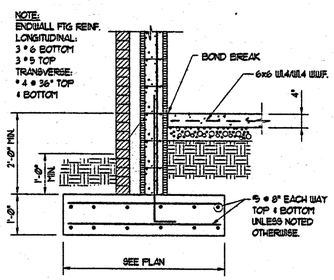

SECTION P 518
SCALE: 3/4" = 1'-0"

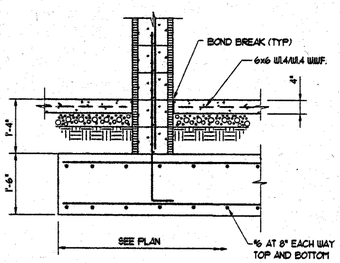

SECTION Q 518
SCALE: 3/4" = 1'-0"

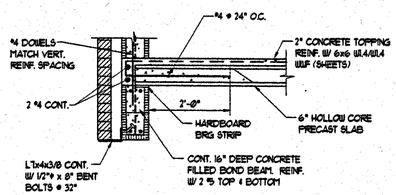

SECTION R 528
SCALE: 3/4" = 1'-0"

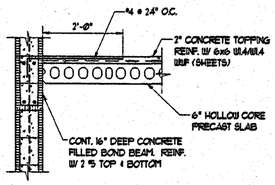

SECTION S 518
SCALE: 3/4" = 1'-0"

NOTE:
DETAILS ASSUME PRECAST PLANKS ARE 48" WIDE. DIMENSION MAY VARY DEPENDING ON MANUFACTURER.

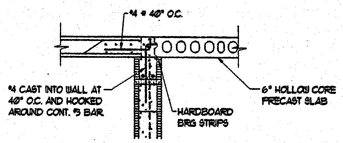

SECTION DD 518
SCALE: 3/4" = 1'-0"

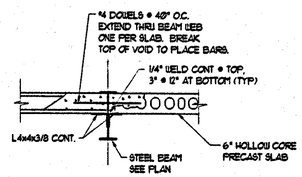

SECTION T 518
SCALE: 3/4" = 1'-0"

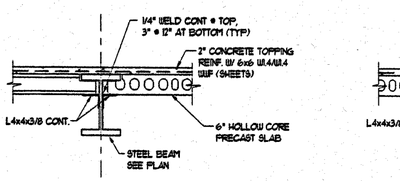

SECTION U 518
SCALE: 3/4" = 1'-0"

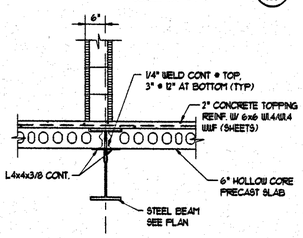

SECTION V 518
SCALE: 3/4" = 1'-0"

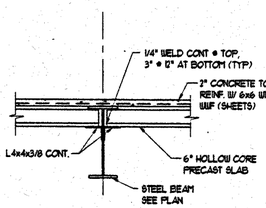

SECTION U 518
SCALE: 3/4" = 1'-0"

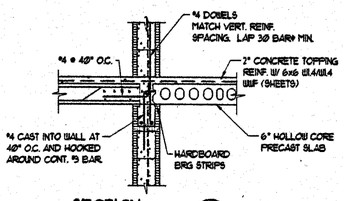

SECTION X 518
SCALE: 3/4" = 1'-0"

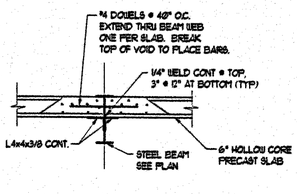

SECTION Z 518
SCALE: 3/4" = 1'-0"

STATE OF ALABAMA REGISTERED ARCHITECT

ALABAMA REGISTERED PROFESSIONAL ENGINEER No. 10425 ROBERT H. HONNETT

WEST CAMPUS LIVING/LEARNING COMPLEX
ALABAMA A&M UNIVERSITY

SMITH, KRANERT, TOMBLIN & ASSOCIATES
ARCHITECTS, P.C.
A. I. A.
HUNTSVILLE
FLORENCE
ALABAMA

JOB NUMBER

MGH / RJHP / 8-31-99
DRAWN BY-CHECKED BY-DATE

REVISED

SHEET TITLE
DORMITORY SECTIONS

SHEET NUMBER
518
CP
23
CP

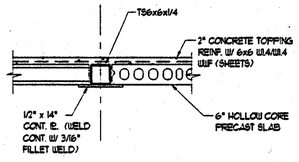

SECTION (A / S19)
SCALE: 3/4" = 1'-0"

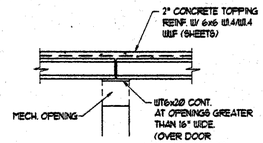

STANDARD MECHANICAL WALL OPENING DETAIL (B / S19)
SCALE: 3/4" = 1'-0"

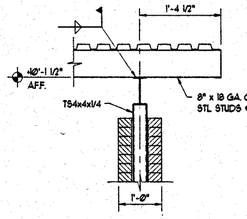

SECTION (C / S19)
SCALE: 3/4" = 1'-0"

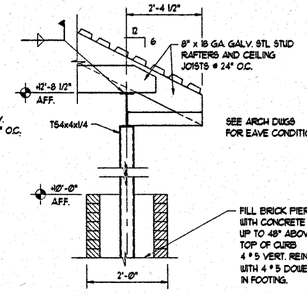

SECTION (D / S19)
SCALE: 3/4" = 1'-0"

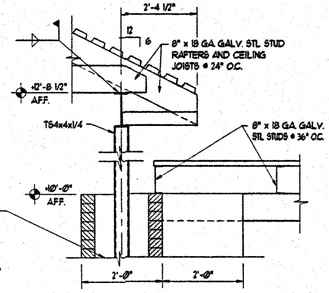

SECTION (E / S19)
SCALE: 3/4" = 1'-0"

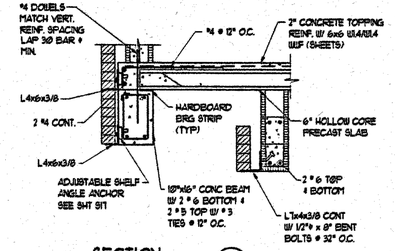

SECTION (F / S19)
SCALE: 3/4" = 1'-0"

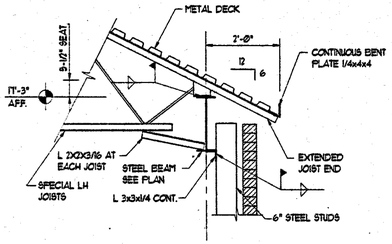

SECTION (G / S19)
SCALE: 3/4" = 1'-0"

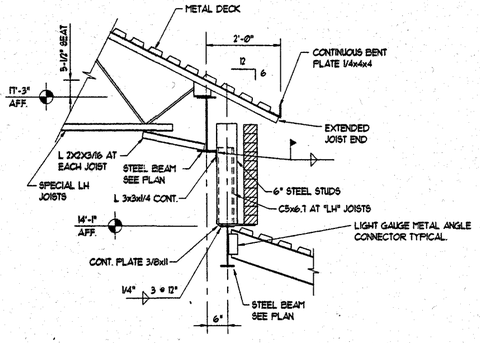

SECTION (H / S19)
SCALE: 3/4" = 1'-0"

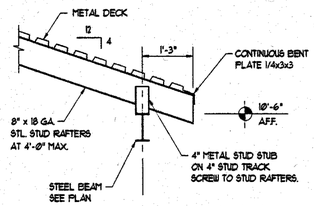

SECTION (J / S19)
SCALE: 3/4" = 1'-0"

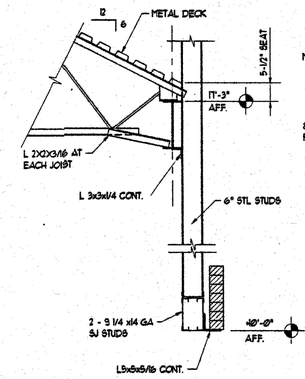

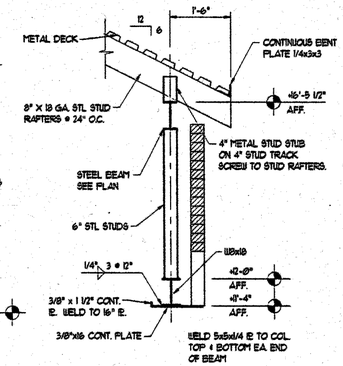

SECTION (K / S19)
SCALE: 3/4" = 1'-0"

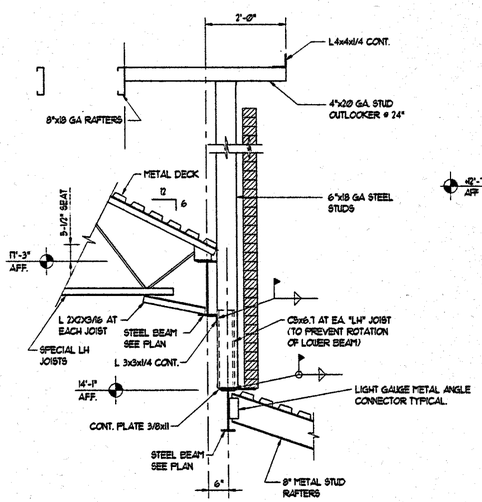

SECTION (L / S19)
SCALE: 3/4" = 1'-0"

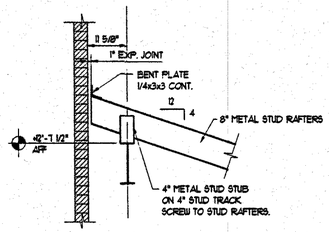

SECTION (M / S19)
SCALE: 3/4" = 1'-0"

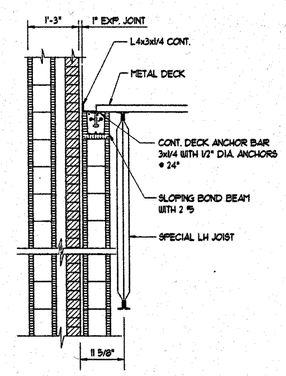

SECTION (N / S19)
SCALE: 3/4" = 1'-0"

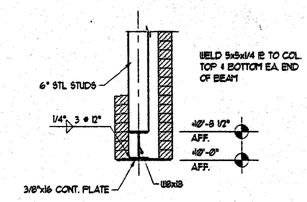

SECTION (P / S19)
SCALE: 3/4" = 1'-0"

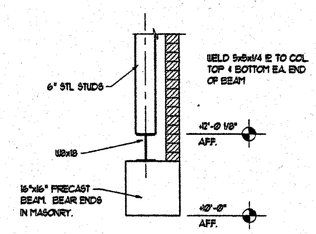

SECTION (Q / S19)
SCALE: 3/4" = 1'-0"

WEST CAMPUS LIVING/LEARNING COMPLEX
ALABAMA A&M UNIVERSITY

SMITH, KRANERT, TOMBLIN & ASSOCIATES
A. L. A.
ARCHITECTS, P.C.
HUNTSVILLE
FLORENCE
ALABAMA

JOB NUMBER

MCH / KHH / 8-31-99
DRAWN BY-CHECKED BY-DATE

REVISED

SHEET TITLE
DORMITORY & CONNECTOR DETAILS

SHEET NUMBER
S19
OF 23

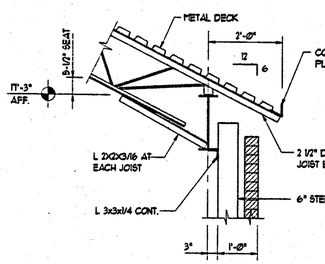

SECTION A 520
SCALE: 3/4" = 1'-0"

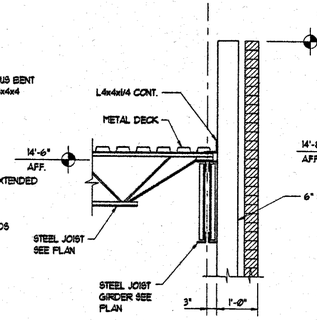

SECTION B 520
SCALE: 3/4" = 1'-0"

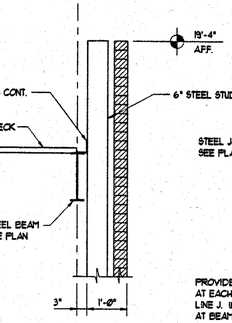

SECTION C 520
SCALE: 3/4" = 1'-0"

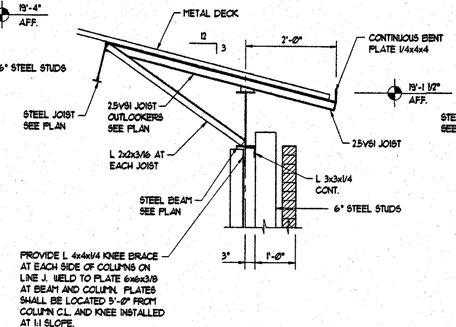

SECTION D 520
SCALE: 3/4" = 1'-0"

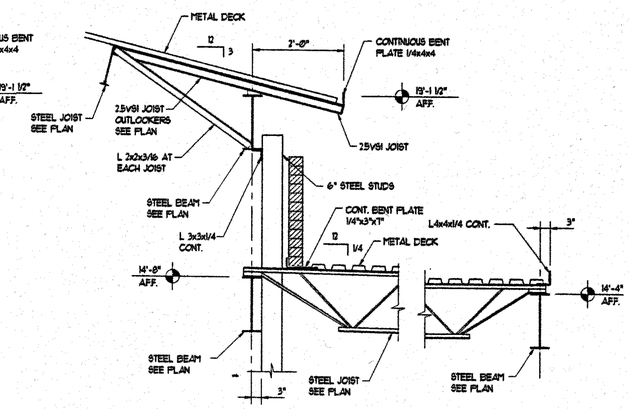

SECTION E 520
SCALE: 3/4" = 1'-0"

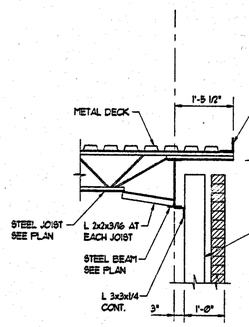

SECTION F 520
SCALE: 3/4" = 1'-0"

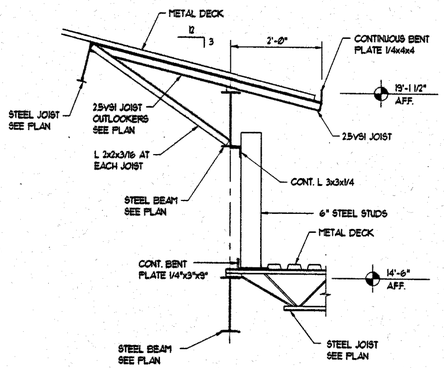

SECTION G 520
SCALE: 3/4" = 1'-0"

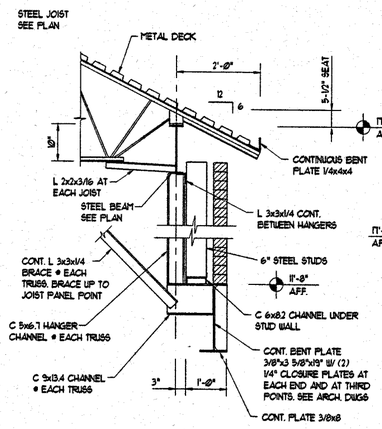

SECTION H 520
SCALE: 3/4" = 1'-0"

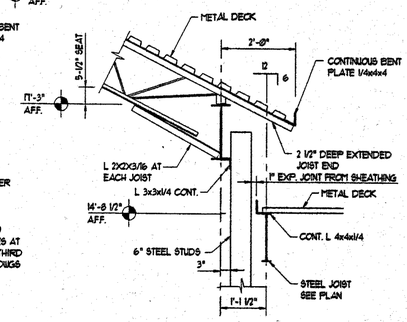

SECTION J 520
SCALE: 3/4" = 1'-0"

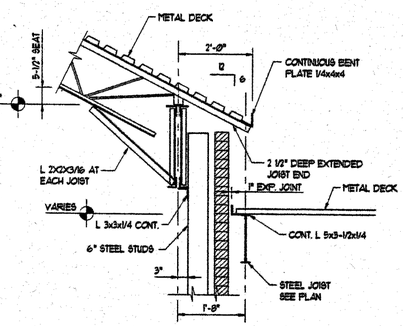

SECTION K 520
SCALE: 3/4" = 1'-0"

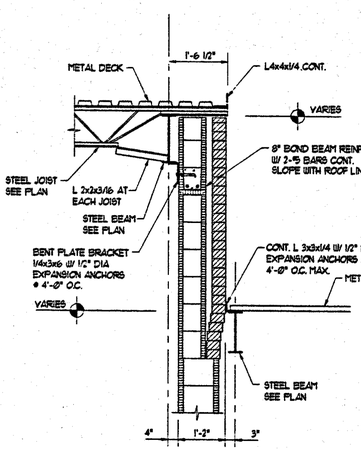

SECTION L 520
SCALE: 3/4" = 1'-0"

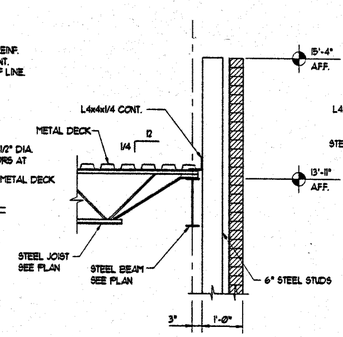

SECTION M 520
SCALE: 3/4" = 1'-0"

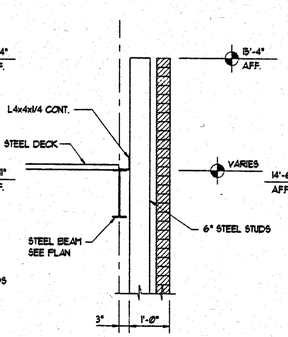

SECTION N 520
SCALE: 3/4" = 1'-0"

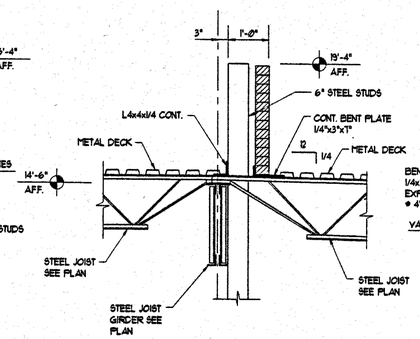

SECTION P 520
SCALE: 3/4" = 1'-0"

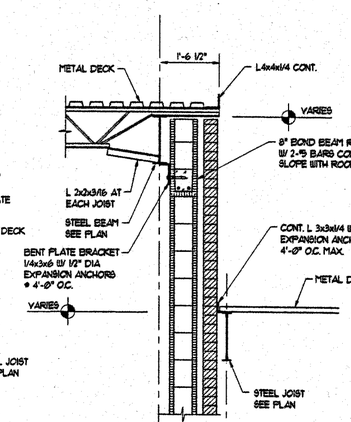

SECTION Q 520
SCALE: 3/4" = 1'-0"

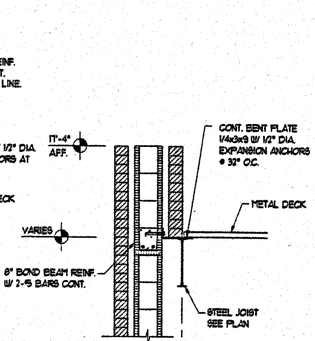

SECTION R 520
SCALE: 3/4" = 1'-0"

WEST CAMPUS LIVING/LEARNING COMPLEX
ALABAMA A&M UNIVERSITY

SMITH, KRANERT, TOMBLIN & ASSOCIATES
ARCHITECTS, P.C.
A. I. A.
ALABAMA
FLORENCE HUNTSVILLE

JOB NUMBER

DRAWN BY: /DATE: /8-21-99
DESIGNED BY: /DATE:
REVISED

SHEET TITLE
SECTIONS

SHEET NUMBER
S20
OF
23
OF

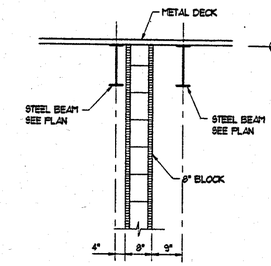

SECTION A / S21
SCALE: 3/4" = 1'-0"

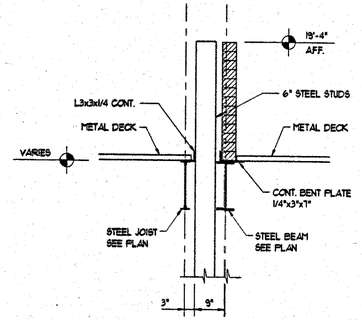

SECTION B / S21
SCALE: 3/4" = 1'-0"

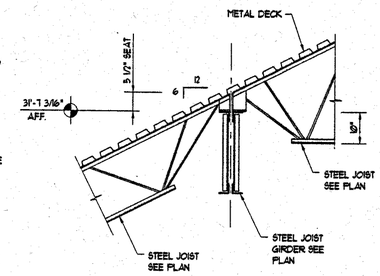

SECTION C / S21
SCALE: 3/4" = 1'-0"

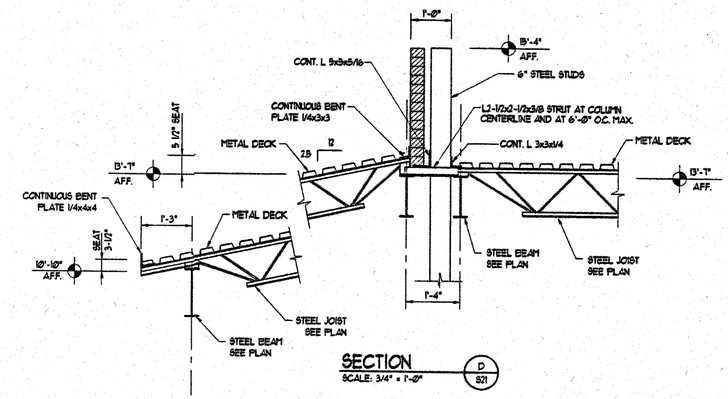

SECTION D / S21
SCALE: 3/4" = 1'-0"

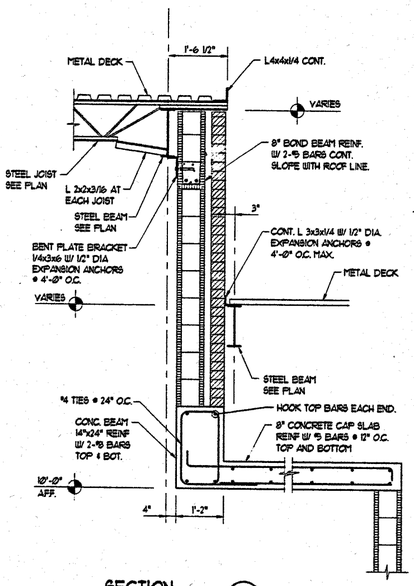

SECTION E / S21
SCALE: 3/4" = 1'-0"

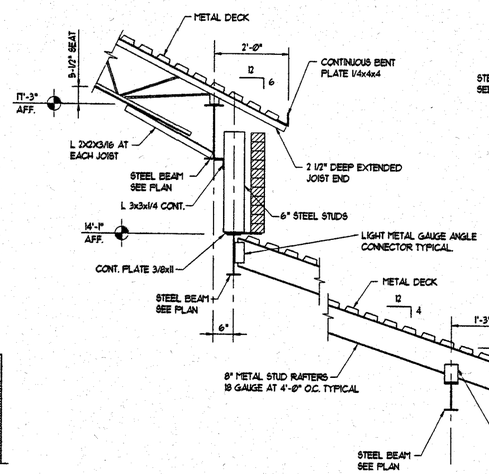

SECTION F / S21
SCALE: 3/4" = 1'-0"

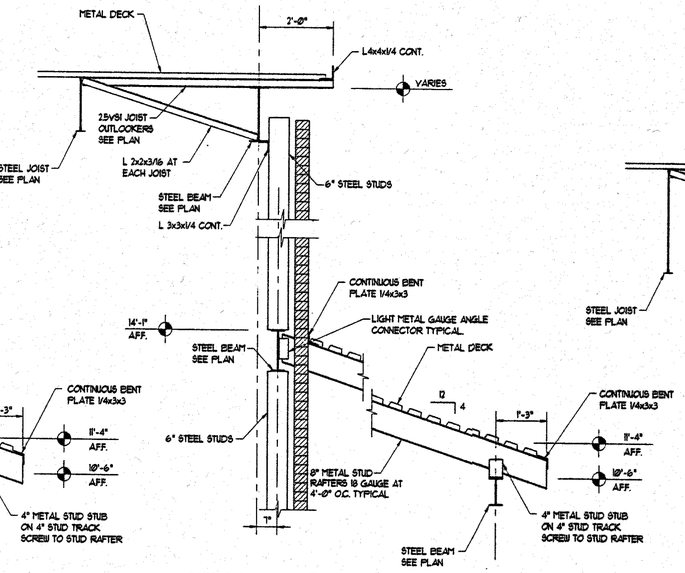

SECTION G / S21
SCALE: 3/4" = 1'-0"

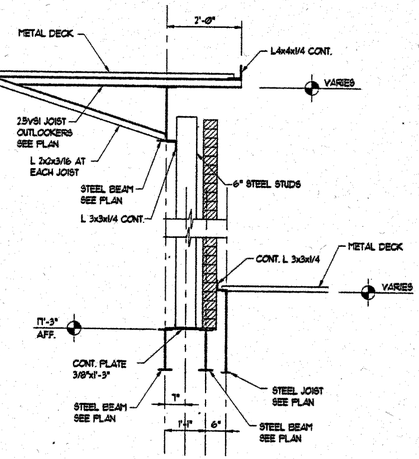

SECTION H / S21
SCALE: 3/4" = 1'-0"

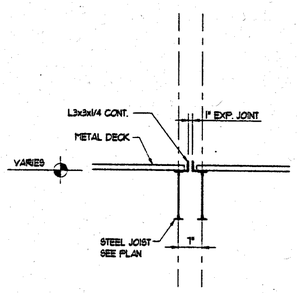

SECTION J / S21
SCALE: 3/4" = 1'-0"

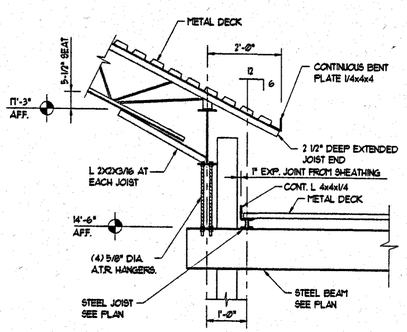

SECTION K / S21
SCALE: 3/4" = 1'-0"

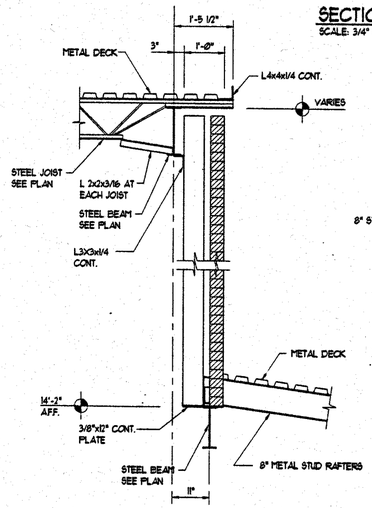

SECTION L / S21
SCALE: 3/4" = 1'-0"

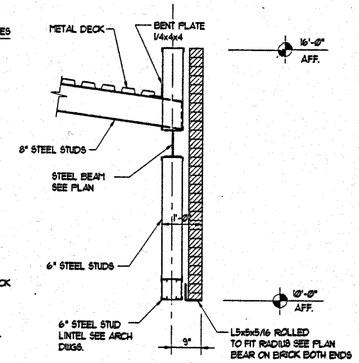

SECTION M / S21
SCALE: 3/4" = 1'-0"

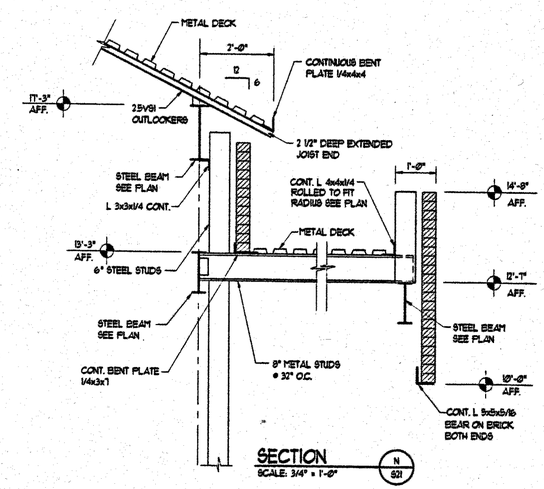

SECTION N / S21
SCALE: 3/4" = 1'-0"

WEST CAMPUS LIVING/LEARNING COMPLEX
ALABAMA A&M UNIVERSITY

SMITH, KRANERT, TOMBLIN & ASSOCIATES
ARCHITECTS, P.C.
A.I.A.
FLORENCE, ALABAMA
HUNTSVILLE, ALABAMA

STATE OF ALABAMA REGISTERED ARCHITECT

JOB NUMBER

DRAWN BY / CHECKED BY / DATE: 8-31-99

REVISED

SHEET TITLE: SECTIONS

SHEET NUMBER: S21

CP .23 CP

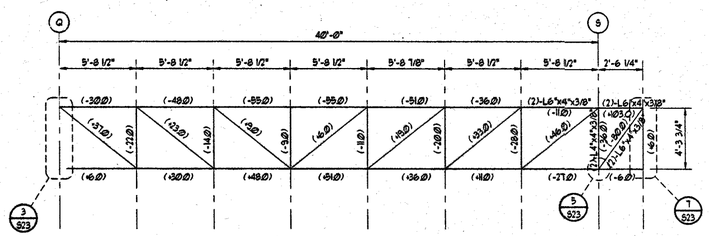

TRUSS T1 AT COLUMN LINE 23

1/4" = 1'-0"

NOTE: TRUSS MEMBERS ARE AS FOLLOWS UNLESS SHOWN OTHERWISE:
TOP CHORD: (2) - L 3-1/2"x3"x5/16"
BOTTOM CHORD: (2) - L 3-1/2"x2-1/2"x1/4"
WEBS: (2) - L 3"x2"x1/4"

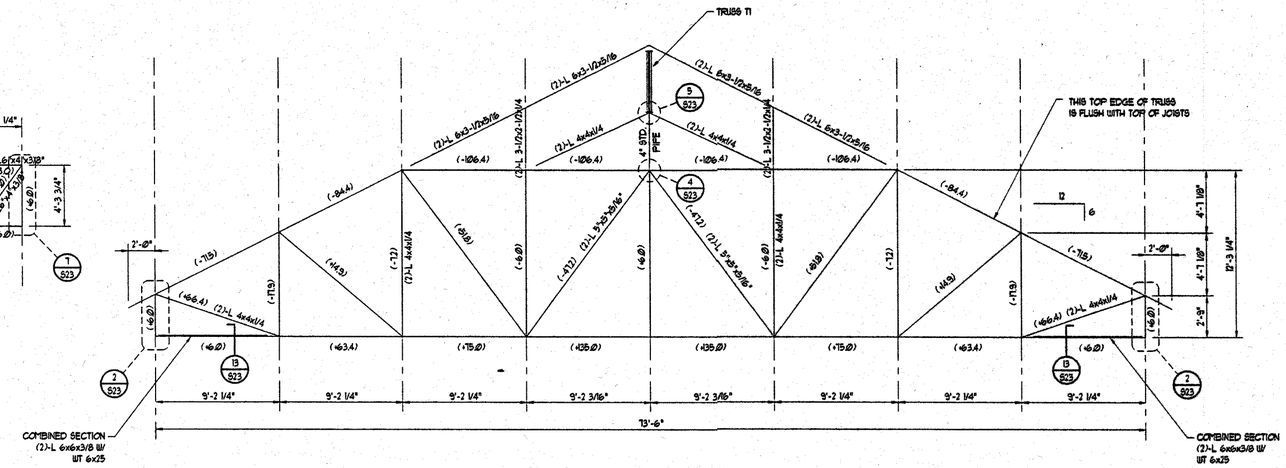

TRUSS T2 AT COLUMN LINE S

1/4" = 1'-0"

NOTE: TRUSS MEMBERS ARE AS FOLLOWS UNLESS SHOWN OTHERWISE:
TOP CHORD: (2) - L 6"x6"x1/2"
BOTTOM CHORD: (2) - L 6"x6"x3/8"
WEBS: (2) - L 3-1/2"x2-1/2"x1/4"

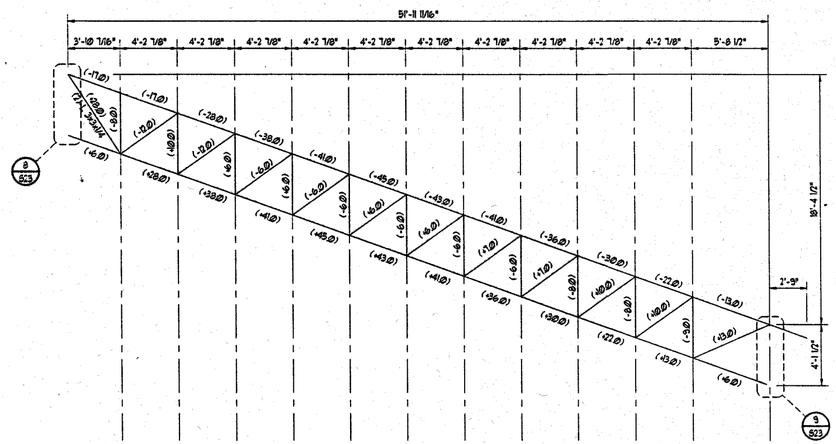

HIP TRUSS T3

1/4" = 1'-0"

NOTE: TRUSS MEMBERS ARE AS FOLLOWS UNLESS SHOWN OTHERWISE:
TOP CHORD: (2) - L 3"x4"x1/4"
BOTTOM CHORD: (2) - L 2"x3"x1/4"
WEBS: (2) - L 2"x2"x3/16"
TRUSS CHORD ANGLES ARE TO HAVE SHORT LEGS BACK TO BACK.

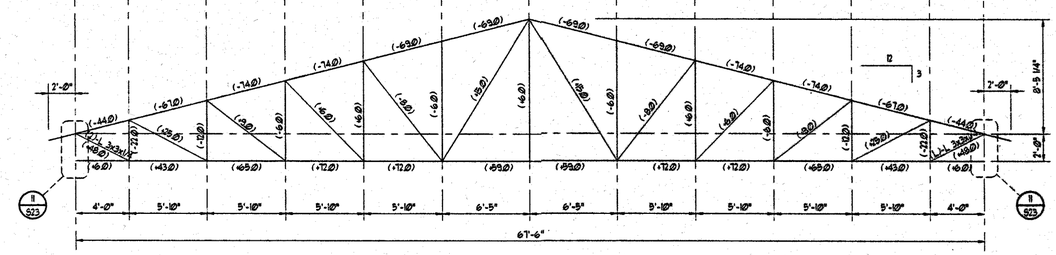

TRUSS T4

1/4" = 1'-0"

NOTE: TRUSS MEMBERS ARE AS FOLLOWS UNLESS SHOWN OTHERWISE:
TOP CHORD: (2) - L 5"x3-1/2"x5/16"
BOTTOM CHORD: (2) - L 4"x4"x1/4"
WEBS: (2) - L 2-1/2"x2-1/2"x3/16"

ACTIVITY BUILDING TRUSSES

1. GUSSET PLATES AT DOUBLE-MEMBER CONNECTIONS SHALL BE 3/8" THICK.
2. DOUBLE ANGLE MEMBERS SHALL HAVE LONG LEGS BACK-TO-BACK EXCEPT WHERE SHOWN OTHERWISE.
3. DESIGN FORCES ARE INDICATED IN KIPS (1000 lbs.)
   "+" INDICATES TENSION FORCE.
   "-" INDICATES COMPRESSION FORCE.
4. PROVIDE SPACER PLATES BETWEEN DOUBLE ANGLE OR DOUBLE CHANNEL MEMBERS. LOCATE SPACER PLATES SO THAT CLEAR DISTANCE BETWEEN SPACERS AND GUSSETS DOES NOT ALLOW l/rz RATIO OF A SINGLE MEMBER TO EXCEED THE l/rx OR l/ry RATIOS OF THE DOUBLE MEMBER SECTION.
5. CONNECT ALL MEMBERS FOR A FORCE OF AT LEAST 6 KIPS.

STATE OF ALABAMA REGISTERED ARCHITECTS

ALABAMA REGISTERED PROFESSIONAL ENGINEER ROBERT H. HODGETT

WEST CAMPUS LIVING/LEARNING COMPLEX
ALABAMA A&M UNIVERSITY

SMITH, KRANERT, TOMBLIN & ASSOCIATES
ARCHITECTS, P.C.
HUNTSVILLE
FLORENCE
A. L. A.
ALABAMA

JOB NUMBER

CMJ / RHH / 8-21-95
DRAWN BY-CHECKED BY-DATE

REVISED

SHEET TITLE
TRUSS ELEVATIONS

SHEET NUMBER
S22
OF
23

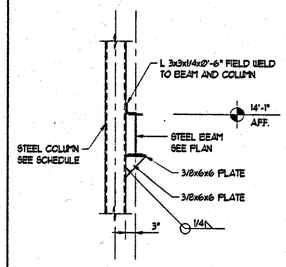

DETAIL 1/S23
SCALE: 3/4" = 1'-0"

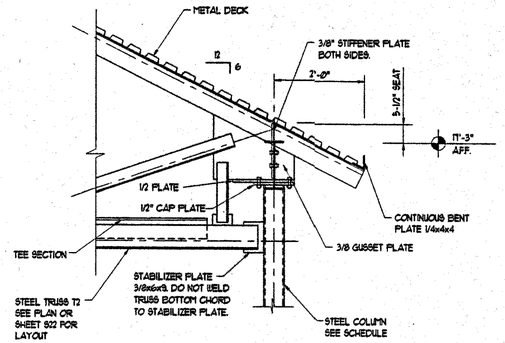

DETAIL 2/S23
SCALE: 3/4" = 1'-0"

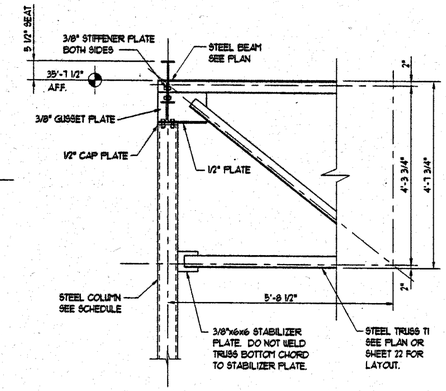

DETAIL 3/S23
SCALE: 3/4" = 1'-0"

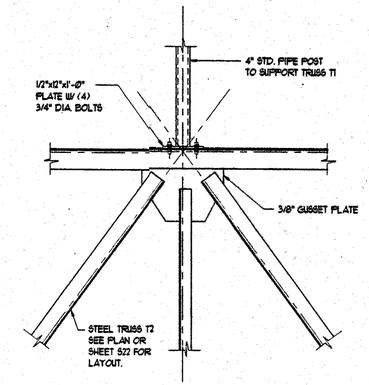

DETAIL 4/S23
SCALE: 3/4" = 1'-0"

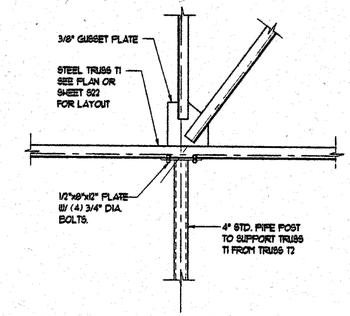

DETAIL 5/S23
SCALE: 3/4" = 1'-0"

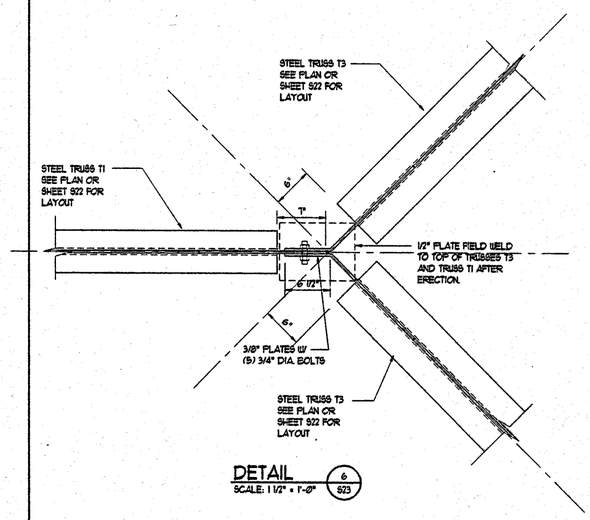

DETAIL 6/S23
SCALE: 1 1/2" = 1'-0"

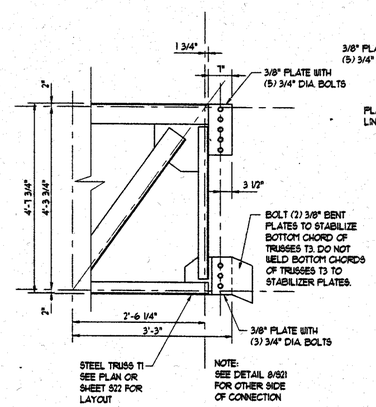

DETAIL 7/S23
SCALE: 3/4" = 1'-0"

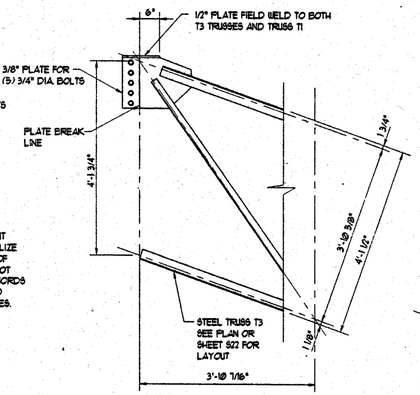

DETAIL 8/S23
SCALE: 3/4" = 1'-0"

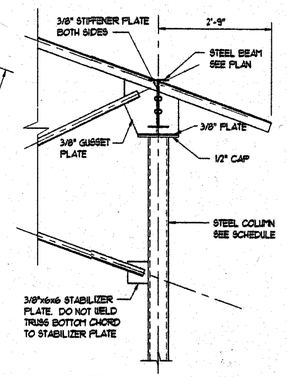

DETAIL 9/S23
SCALE: 3/4" = 1'-0"

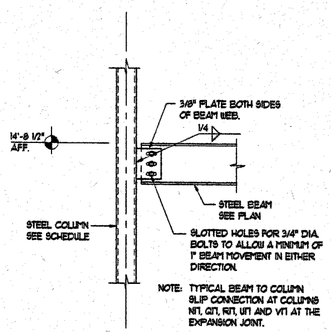

DETAIL 10/S23
SCALE: 3/4" = 1'-0"

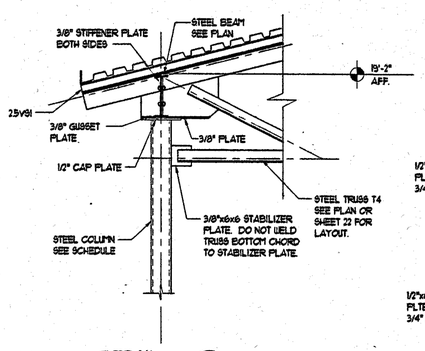

DETAIL 11/S23
SCALE: 3/4" = 1'-0"

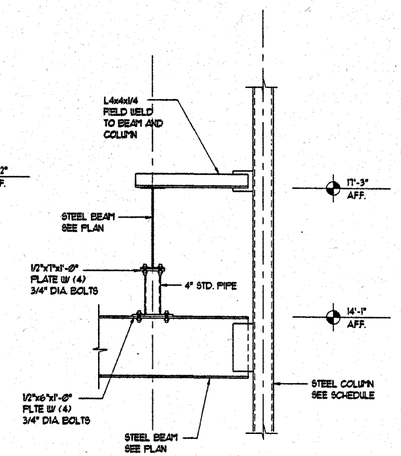

DETAIL 12/S23
SCALE: 3/4" = 1'-0"

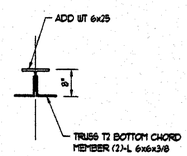

DETAIL 13/S23
SCALE: 3/4" = 1'-0"

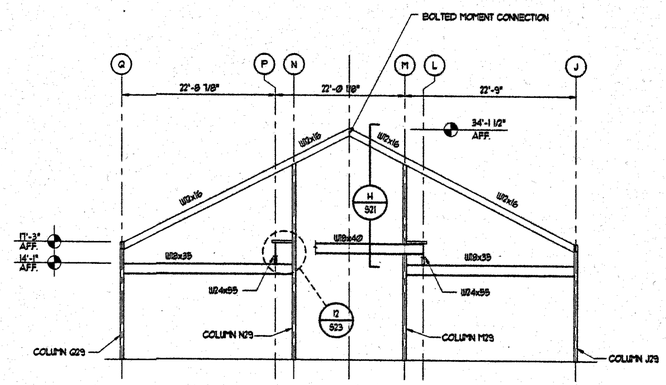

ELEVATION AT COLUMN LINE 29 E1/S23
SCALE: 1/8" = 1'-0"

WEST CAMPUS LIVING/LEARNING COMPLEX
ALABAMA A&M UNIVERSITY

SMITH, KRANERT, TOMBLIN & ASSOCIATES
FLORENCE
A. I. A.
ARCHITECTS, P.C.
HUNTSVILLE
ALABAMA

JOB NUMBER

CMJ / 5-11-99 / 8-31-99
DRAWN BY / CHECKED BY / DATE

REVISIONS

SHEET TITLE
SECTIONS

SHEET NUMBER
S23
OF
23