## SECTION 00 91 12

## ADDENDUM NUMBER 3




**PARTICULARS**

**1.01 DATE: MARCH 24, 2021**

**1.02 PROJECT: WELCOME CENTER**

**1.03 PROJECT NUMBER: DCM NO. 2020604**

**1.04 OWNER: ALABAMA A&M UNIVERSITY**

**1.05 ARCHITECT: NOLA | VAN PEURSEM ARCHITECTS, PC**

**TO PROSPECTIVE BIDDERS**

**2.01 THIS ADDENDUM FORMS A PART OF THE CONTRACT DOCUMENTS AND MODIFIES THE BIDDING DOCUMENTS DATED JANUARY 25, 2021, WITH AMENDMENTS AND ADDITIONS NOTED BELOW.**

**2.02 ACKNOWLEDGE RECEIPT OF THIS ADDENDUM IN THE SPACE PROVIDED IN THE PROPOSAL FORM. FAILURE TO DO SO MAY DISQUALIFY THE BIDDER.**

**2.03 THIS ADDENDUM CONSISTS OF 62 PAGES.**

**CHANGES TO THE PROJECT MANUAL**

**3.01 TABLE OF CONTENTS:**

A. Remove Section 10 22 26 Operable Partitions.

**3.02 SECTION 00 22 00-OWNER'S SUPPLEMENTARY INSTRUCTIONS TO BIDDERS:**

A. Paragraph 1.03.B - Change paragraph to read as follows, "All sealed bids will be received by 2:00 p.m. CDT on April 8, 2021 at which time each bidder must submit a sealed envelope properly titled containing the Proposal form, the Bid Bond, Accounting of Sales Tax - DCM Form C-3A form, ***Supplement B- List of Unit Prices (Section 00 43 22),*** and Affidavit A. Upon receipt of these documents the bids will be publicly opened and read aloud. Supplement A – List of Subcontractors (section 00 43 21) and Affidavit C are to be hand delivered or emailed to the Architect within 24 hours after receipt of bids. No changes to the base bid will be allowed after 2:00 p.m.

**3.03 SECTION 01 10 00-SUMMARY:**

A. Paragraph 1.04 – Change paragraph to read as follows, "Aid to Construction - See Section 01 21 00 - Allowance."

B. Paragraph 1.09 – Change paragraph to read as follows, "It is anticipated that the successful bidder will ***receive notice of award*** within thirty (30) days of the bid date. Substantial

completion must be achieved within 365 calendar days. Refer to Supplementary Conditions of the Contract located in Section 00 50 00 for contract requirements relating to liquidated damages and time extensions."

**3.04 SECTION 08 80 00-GLAZING:**

A. Add Paragraph 2.05 and its subparagraphs to read as follows:
2.05 Plastic Films
A. Manufacturers
1. 3M Window Film: Sun Control Window Film Traditional Series - Affinity 15; www.3M.com
2. Substitutions: Refer to Section 01 60 00- Product Requirements

**3.05 SECTION 11 40 00- FOOD SERVICE EQUIPMENT:**

A. Add Paragraph 4.03 to read as follows:
4.03 All items listed on the contract drawings under the heading "Proprietary Equipment Schedule (Items Supplied by General Contractor)" shall be furnished in accordance with the foregoing specifications and with the following detailed item specifications. Substitutions: Refer to Section 01 60 00 - Product Requirements

B. Add item specifications for the following items listed on the contract drawings under the heading "Proprietary Equipment Schedule (Items Supplied by General Contractor)": 220, 260, 266, 269, 270, 355F, 359, 359L, 360, 360E, 360F, 360Fe, 364, 364F, 366, 366F, 367FW, 370B, 410, 410a,410b, 449, 449a, 449b, 651, 661.

**3.06 SECTION 22 42 10-PLUMBING FIXTURES:**

A. Paragraph 2.02 to delete subparagraphs P-9 Trap Primer and P-22 Ice Machine Filtration in their entirety.

**CHANGES TO THE DRAWINGS**

**4.01 TITLE SHEET:**

A. Add the following sheet listing to the Architectural Legend:
1. A-3.4 INTERIOR ELEVATIONS

B. Remove the following sheet listings from the Plumbing Legend:
1. P-3.1 PLUMBING SCHEDULES & DETAILS
2. P-3.2 PLUMBING SCHEDULES & DETAILS

**4.02 SHEETS L-1.1, L-2.1, AND L-3.1:**

A. Replace these sheets in their entirety. Revisions include the following:
1. Updated sidewalk configuration at the north west corner of the building.
2. Correction to the drawing issue date

**4.03 SHEETS L-2.2 AND L-3.2:**

A. Replace these sheets in their entirety. Revisions include the following:
1. Correction to the drawing issue date

**4.04 SHEET FS-1.20 – CFA EQUIPMENT SCHEDULE:**

A. Replace this sheet in its entirety. Revisions include the following:
   1. Add note regarding equipment allowances.

**4.05 SHEET P-1.1 – PLUMBING FLOOR PLAN – FIRST FLOOR:**

A. Replace this sheet in its entirety. Revisions include the following:
   1. Trap primers and drains have been removed from the floor plan.
   2. Floor drains labeled P-13 in Janitor 106, Men 106A and Women 107 have been changed to P-11.
   3. P-18 Interior Wall Hydrants have been added to the ADA stalls in Men 106A and Women 107.
   4. Roof drains, overflow drains and discharge nozzles have been changed to the appropriate fixture number, matching the roof plan.
   5. Vent systems have been added to the floor plan.
   6. The RWL dropping at CL 5.5 / D has been noted to dropping down to below floor.
   7. The HWR pipe note has been changed to hot water return up, in lieu of hot water return down.
   8. Added note to the cold water drop down in chase, to see Cold Water Diagrams for continuation (Typ.)

**4.06 SHEET P-1.2 – PLUMBING FLOOR PLAN – FIRST FLOOR KITCHEN:**

A. Replace this sheet in its entirety. Revisions include the following:
   1. Trap primers and drains have been removed from the floor plan.
   2. Vent systems have been added to the floor plan.

**4.07 SHEET P-1.3 – PLUMBING FLOOR PLAN – SECOND FLOOR:**

A. Replace this sheet in its entirety. Revisions include the following:
   1. Trap primers and drains have been removed from the floor plan.
   2. Vent systems have been added to the floor plan.
   3. Plumbing VTR’s have been shown on the low roof, including the mechanical units, for compliance of the 15’ minimum between the vents and the unit outside air intake hoods.
   4. The water closet in Women 217 has been changed to a P-1 fixture.
   5. All roof drains and overflow drains have been changed to fixture number and size.
   6. The overflow drains off the kitchen roof has been changed to show the drain routing and P-16 discharge nozzle.

**4.08 SHEET P-1.4 – PLUMBING FLOOR PLAN – ROOF:**

A. Replace this sheet in its entirety. Revisions include the following:
   1. Plumbing VTR’s have been shown on the low and high roof, including the mechanical units, for compliance of the 15’ minimum between the vents and the unit outside air intake hoods.

**4.09 SHEET P-2.1 – PLUMBING NOTES, SCHEDULES, & LEGEND:**

A. Replace this sheet in its entirety. Revisions include the following:
   1. The Fixture Connection Schedule has changed. The P-22 Filtration System has been removed.

**4.10 SHEET P-2.2 – HOT WATER DETAILS & RISER DIAGRAM:**

A. Replace this sheet in its entirety. Revisions include the following:
   1. A check valve has been added to the Circulation Pump Detail and both Water Heater Details.

**4.11 SHEET P-2.3– COLD WATER DETAILS & RISER DIAGRAM:**

A. Replace this sheet in its entirety. Revisions include the following:
   1. Kitchen Cold Water Diagram has been connected to the other cold-water diagram.
   2. P-18 Interior Wall Hydrants have been added to Toilets 106A and 107.

**4.12 SHEETS P-2.4 AND P-2.5:**

A. Replace this sheet in its entirety. Revisions include the following:
   1. Plumbing VTR's have been changed to match the floor plan.

**4.13 SHEET M-1.1 – MECHANICAL FLOOR PLAN – FIRST FLOOR:**

A. Replace this sheet in its entirety. Revisions include the following:
   1. Refrigerant piping has been added between the ductless split indoor unit and outdoor unit.
   2. EF-1 exhaust system has changed based on a new CFM.

**4.14 SHEET M-1.2 – MECHANICAL FLOOR PLAN – FIRST FLOOR KITCHEN:**

A. Replace this sheet in its entirety. Revisions include the following:
   1. Refrigerant piping has been added between the ductless split indoor unit and outdoor unit.
   2. The 14" x 14" return duct has changed position to not be over the lavatory plumbing wall.

**4.15 SHEET M-3.1 – MECHANICAL SCHEDULE:**

A. Replace this sheet in its entirety. Revisions include the following:
   1. RTU-5 outside air has changed on the RTU Schedule, and the bipolar ionization line item has been added to the accessories.
   2. The ionization equipment schedule has been added to the schedule sheet.
   3. EF-1 has changed on the Exhaust Fan Schedule.
   4. The Duct Insulation Schedule has been changed to add the RTU's in lieu of an AHU.

**4.16 SHEET M-3.2 – MECHANICAL SCHEDULE:**

A. Replace this sheet in its entirety. Revisions include the following:
   1. The Mechanical Devices and Notes Note 3 & 3 have been changed to incorporate the requirements of the Mechanical Contractor's responsibility for controls and added information about Chick-Fil-A food service equipment installations. Note 7 has changed to match the supports in the specifications.

**4.17 SHEET E-1.0 – ELECTRICAL LEGEND:**

A. Replace this sheet in its entirety. Revisions include the following:
   1. Revised legend information for Controlled Duplex Receptacle and Controlled Double Duplex Receptacle to clarify proper switching type.
   2. Revised legend information for Floor box PRA and FRA to provide half switched receptacles in lieu of un-switched receptacles.
   3. Revised Fire Alarm Legend Mark Smoke Detector and Heat Detector to match plans.

**4.18 SHEET E-2.1 – ELECTRICAL PANELBOARD SCHEDULE:**

A. Replace this sheet in its entirety. Revisions include the following:
   1. Panel R2D has been added to panel schedule.

**4.19 SHEET E-3.0 – ELECTRICAL SINGLE LINE DIAGRAM:**

A. Replace this sheet in its entirety. Revisions include the following:
   1. Panel R2A has been added to single line.

**4.20 SHEET E-5.0 – AUXILIARY DETAILS 1:**

A. Replace this sheet in its entirety. Revisions include the following:
   1. Change reference at auxiliary backboard from IT XXX to IT 105.
   2. Change note number 2 to note number 1. Change notes number 3 and 4 to notes number 2 and 3, respectively.

**4.21 SHEET E-6.1 – FIRST FLOOR PLAN – POWER:**

A. Replace this sheet in its entirety. Revisions include the following:
   1. Conference 108A: Change ceiling receptacle to half switched receptacle.

**4.22 SHEET E-6.2 – FIRST FLOOR PLAN – ENLARGED KITCHEN:**

A. Replace this sheet in its entirety. Revisions include the following:
   1. Change all feeder breakers for equipment located under hoods to shunt-trip type breakers and shunt when hood Ansul system is activated.
   2. Delete Items 180-3, 182-4, 503, 183-2.
   3. Item 315-1,3 is a single piece of equipment with 2 connections and has been combined (listing for 315-3 has been combined with 315-1), Item 315-2,4 is a single piece of equipment with 2 connections and has been combined (listing for 315-4 has been combined with 315-2).

**4.23 SHEET E-6.3 – FIRST FLOOR PLAN – AUXILIARY:**

A. Replace this sheet in its entirety. Revisions include the following:
   1. Added Fire Alarm Speaker Strobe in ceiling of Lobby 104.
   2. Added Smoke Detector in ceiling of Lobby 104 outside of Elevator.

**4.24 SHEET E-7.1 - SECOND FLOOR PLAN – POWER:**

A. Replace this sheet in its entirety. Revisions include the following:
   1. Revised floor box PRA circuiting and connections to reflect changes for switched receptacles.
   2. Added switched double duplex receptacle in Room Recruiter 213.

**4.25 SHEET E-7.2 – SECOND FLOOR PLAN – AUXILIARY:**

A. Replace this sheet in its entirety. Revisions include the following:
   1. Added Manual Pull Station in Reception 201.
   2. Added Manual Pull Station outside Stair S202.

**4.26 SHEET E-7.3 – SECOND FLOOR PLAN – HVAC EQUIPMENT CONNECTIONS:**

A. Replace this sheet in its entirety. Revisions include the following:
   1. Revised sheet note 1 to read as follows: UNIT FURNISHED WITH INTEGRAL SAFETY SWITCH AND POWERED GFCI CONVENIENCE OUTLET.

## END OF ADDENDUM NUMBER 3

ITEM #220

SAFCO

# 6 HOOK WALL RACK

MODEL NUMBER 4162

| PARTS LIST | | | |
|---|---|---|---|
| LETTER CODE | DESCRIPTION | QTY. | PART NO. |
| Ⓐ | Screw | 12 | 4161-23 |
| Ⓑ | Hook | 6 | 4160-01CR |
| Ⓒ | Wall Plate | 1 | 4162-01 |
| Ⓓ | Mounting Screw (not shown) | 3 | 4160-22 |

Insert Ⓐ Screws through the holes in the Ⓑ Hooks, then through the Ⓒ Wall Plate.

Attach wall plate to wall, level and at an acceptable height, using fasteners appropriate to the particular wall surface (Mounting Screws Ⓓ included are intended for WOOD surface only; fasteners for other surfaces not included).

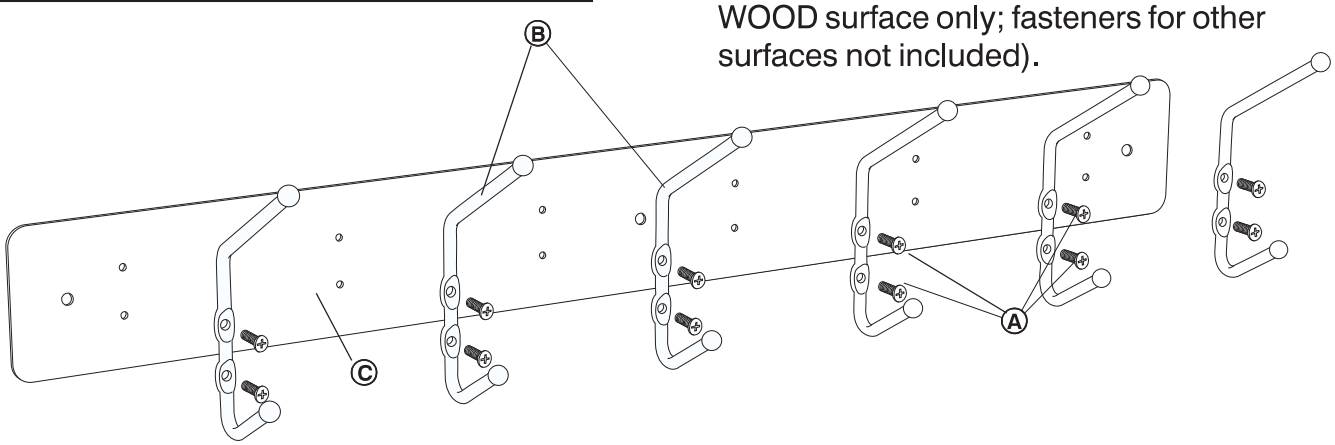




Safco Products Company, New Hope, MN 55428

ITEM #
260
266
269
270

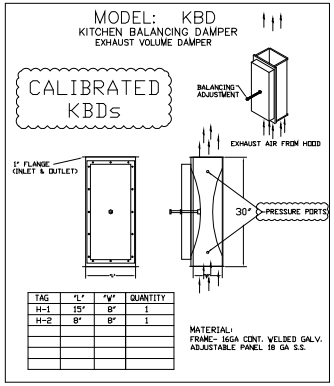


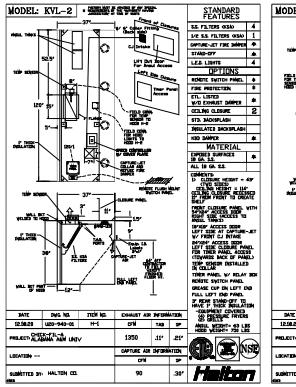


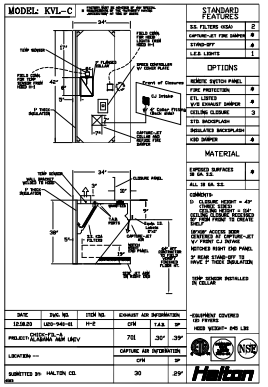


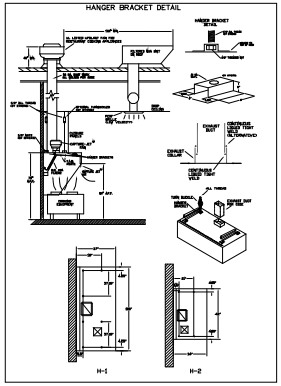


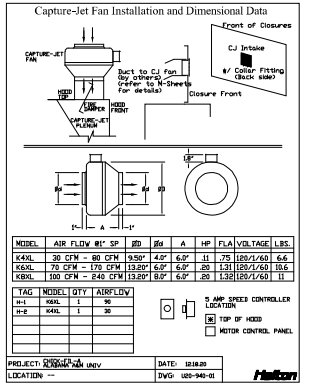


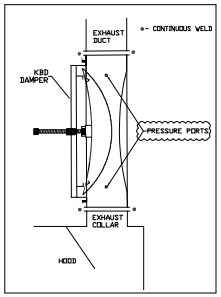


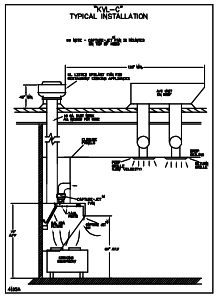


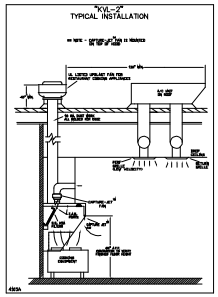


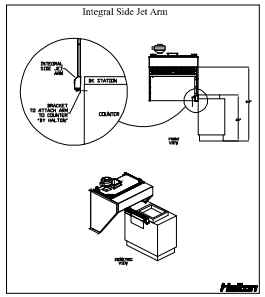


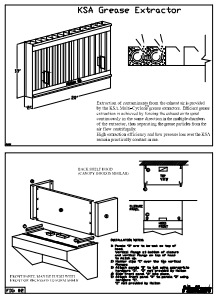


CONFIRM FAN LAYOUT

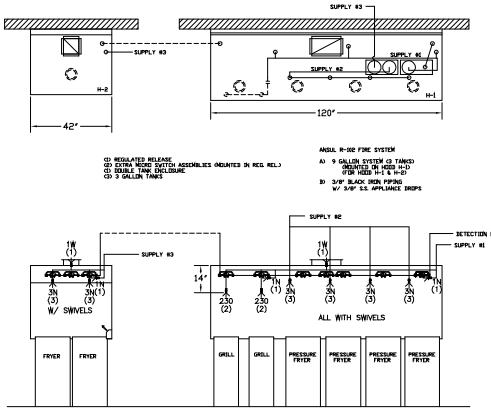


ANSUL R-102 FIRE SYSTEM LAYOUT

FUSIBLE LINK RATINGS

| ITEM | TEMP |
|---|---|
| OPEN FRYERS | 450° |
| 2 BURNER / FLAT TOP | 450° |
| PRESSURE FRYERS | 450° |
| GRILL | 450° |
| EXHAUST COLLARS | 450° |

ANSUL R-102 FIRE SYSTEM NOTES
THREE TANK SYSTEM MOUNTED ON TOP OF (H-1)
MAXIMUM FLOW POINTS = 33

| ITEM # | QTY | DESCRIPTION | FLOW PTS (TOTAL) |
|---|---|---|---|
| 1W | 2 | DUCT NOZZLES | 2 |
| 1N | 3 | PLENUM NOZZLES | 3 |
| 230 | 2 | APPLIANCE NOZZLES | 4 |
| 3N | 6 | APPLIANCE NOZZLES | 18 |
| | | TOTAL FLOW POINTS - 27 | |

| ITEM # | QTY | DESCRIPTION |
|---|---|---|
| #200 | 9 | SERIES DETECTORS W/ FUSIBLE LINKS |
| #201 | 1 | TERMINAL DETECTOR W/ FUSIBLE LINKS |
| #202 | 1 | REGULATED RELEASE W/ DOUBLE POLE MICRO SWITCH |
| #203 | 3 | 3 GALLON TANKS |
| #204 | 1 | DOUBLE TANK ENCLOSURE |
| #205 | 1 | REMOTE PULL STATION |

ANSUL R-102 FIRE SYSTEM
UL LISTED PER STD LATEST STD 300
1. FINAL INSTALLATION IS TO BE MADE IN ACCORDANCE WITH ALL APPLICAPBLE CODES
2. ALL ELECTRICAL COMPONENTS FOR EQUIPMENT SHUT DOWN TO BE PROVIDED BY THE ELECTRICIAN. MICRO-SWITCH INSTALLED IN REGULATED RELEASE BY ANSUL INSTALLER
3. REMOTE PULL STATION LOCATED PER MECHANICAL DRAWINGS

Typical Wiring of HOOD
W/HALTON SUPPLIED SWITCH PANEL

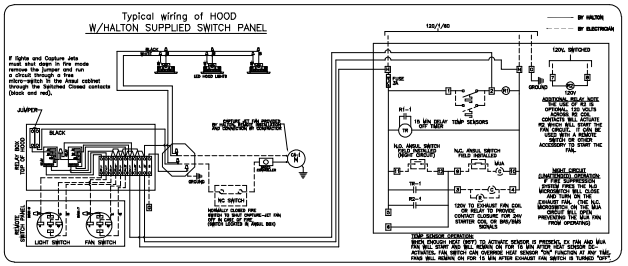


**NOTE: A LARGER REPRODUCTION OF THIS SHEET IS AVAILABLE ON REQUEST.**

HALTON HOODS
- ETL LISTED PER LATEST 710 STANDARD
- BUILT PER NFPA 96
- NSF LISTED

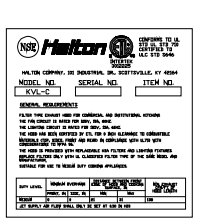


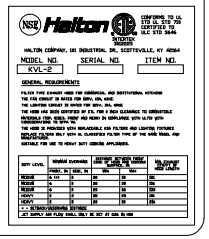


MAIL APPROVED DRAWINGS TO APPROPRIATE FACTORY BELOW:

HALTON CO. (CANADA)
1021 BROWN PLACE
MISSISSAUGA, ON L4W 3R7
1-905-624-0501

HALTON CO. (USA)
101 INDUSTRIAL DRIVE
SCOTTSVILLE, KY 42164
1-270-237-9600

WEBSITE: WWW.HALTON.COM

| REV. | REVISION DESCRIPTION | BY | DATE |
|---|---|---|---|
| 1 | - | - | - |
| 2 | | | |
| 3 | | | |
| 4 | | | |
| 5 | | | |
| 6 | | | |
| 7 | | | |

PROJECT: CHICK-FIL-A
ALABAMA A&M UNIV

LOCATION: --
DRAWN BY: AF
DATE: 12.18.20
SCALE: NTS
Halton Dwg: U20-940-01

Halton
CARE FOR INDOOR AIR

Sheet
H-1.1

THIS DRAWING MUST BE CHECKED, SIGNED AND RETURNED TO THE APPROPRIATE FACTORY.
1. ALL DIMENSIONAL INFORMATION, MOUNTING POSITIONS AND LOCATIONS AND TYPE OF COOKING EQUIPMENT.
NOTE TO APPROVER
HALTON CANNOT GUARANTEE EQUIPMENT SUCH AS MISHANDLED ENERGY IMPUTS OF EQUIPMENT POSITION MAY AFFECT EXHAUST AIRFLOW. ADDITIONAL AIRFLOW MAY BE REQUIRED.
☐ REVISE AND RESUBMIT
APPROVED FOR FABRICATION ☐ WITH CHANGES AS NOTED
☐ WITH NO CHANGES

APPROVED BY: DATE

# Swivel/Rigid Sink and Pantry Faucets
# B-0328-CR-VF05

**TAG:** 355F

*Double Pantry Faucet*

**Architect/Engineering Specifications:**

4” deck mount mixing faucet with polished chrome plated brass body, 5 3/4” swivel/rigid gooseneck with vandal resistant 0.5 GPM non-aerated spray device, ceramic cartridges with check valves, 4" wrist action handles and 1/2” NPT female inlets. Certified to ASME A112.18.1/CSA B125.1, NSF 61-Section 9 and NSF 372. Meets ADA ANSI/ICC A117.1 requirements.

Job Name_____
Model Specified_____Quantity_____
Variations Specified_____
Date_____

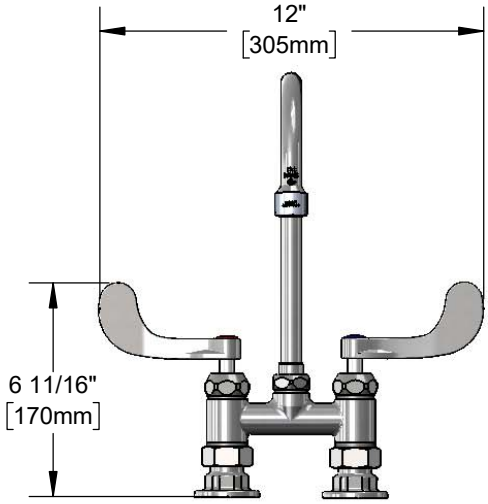


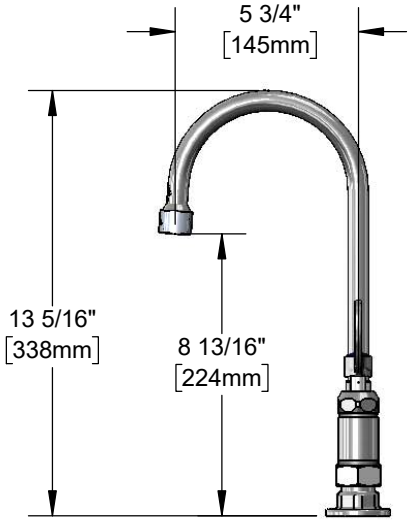


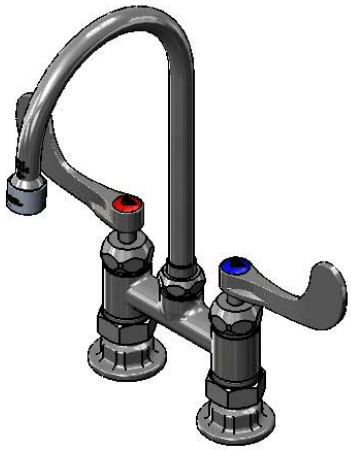

**Features & Benefits:**

- 4” deck mount mixing faucet with polished chrome plated brass body
- 5 3/4” swivel/rigid gooseneck
- Includes lock washer to convert to rigid
- VR 0.5 GPM non-aerated spray device, Series 6 (B-0199-06-N05)
- Quarter-turn Cerama cartridges w/ check valves to prevent cross flow of water
- 4" wrist action handles w/ color coded indexes
- 1/2” NPT female eccentric inlets w/ Ø 2” flanges
- Adjustable centers from 3 3/4” to 4 1/4”
- Material: Polished chrome plated brass body & tubular spout and polished chrome plated metal handles

**Product Compliance:**

- ASME A112.18.1 / CSA B125.1
- NSF 61 - Section 9
- NSF 372 (Low Lead Content)
- ANSI A117.1 (ADA)

**Warranty:** One Year (Limited)

- Cerama Cartridge: Lifetime (Limited)

**Performance Data:**

- Pressure: 20 - 125 psi
- Temperature: 40 °F - 180 °F
- Flow Rate: 0.5 GPM @ 60 psi

ADA Compliant

**Optional Outlets (Series 1 / VR Series 6)**

| GPM | Aerated | Non-Aerated (Laminar) | VR Aerated | VR Non-Aerated (VR Laminar) |
|---|---|---|---|---|
| 0.35 | N/A | ☐ B-0199-01-N035 | N/A | ☐ B-0199-06-N035 |
| 0.5 | N/A | ☐ B-0199-01-N05 | N/A | Standard |
| 1.0 | ☐ B-0199-01-F10 | N/A | ☐ B-0199-06-F10 | N/A |
| 1.2 | ☐ B-0199-01-F12 | ☐ B-0199-01-LF12 | ☐ B-0199-06-F12 | ☐ B-0199-06-LF12 |
| 1.5 | ☐ B-0199-01-WS | ☐ B-0199-29 | ☐ B-0199-06-WS | ☐ B-0199-29VR |
| 2.2 | ☐ B-0199-01 | ☐ B-0199-21 | ☐ B-0199-06 | ☐ B-0199-21-VRF |

**Optional Cartridges With Checks**

☐ Quarter-Turn Cerama w/ Check Valve (Standard)
☐ Quarter-Turn Eterna w/ Spring Check

**Optional Handles**

☐ 4" Wrist Action (Standard)
☐ Lever
☐ 4-Arm

**T&S BRASS AND BRONZE WORKS, INC.**
• 2 Saddleback Cove • Travelers Rest, SC 29690
Ph 800-476-4103 • Fax 864-834-3518
• Simi Valley, CA • Ph 800-423-0150 • www.tsbrass.com

Date: 05/01/18

ITEM #359

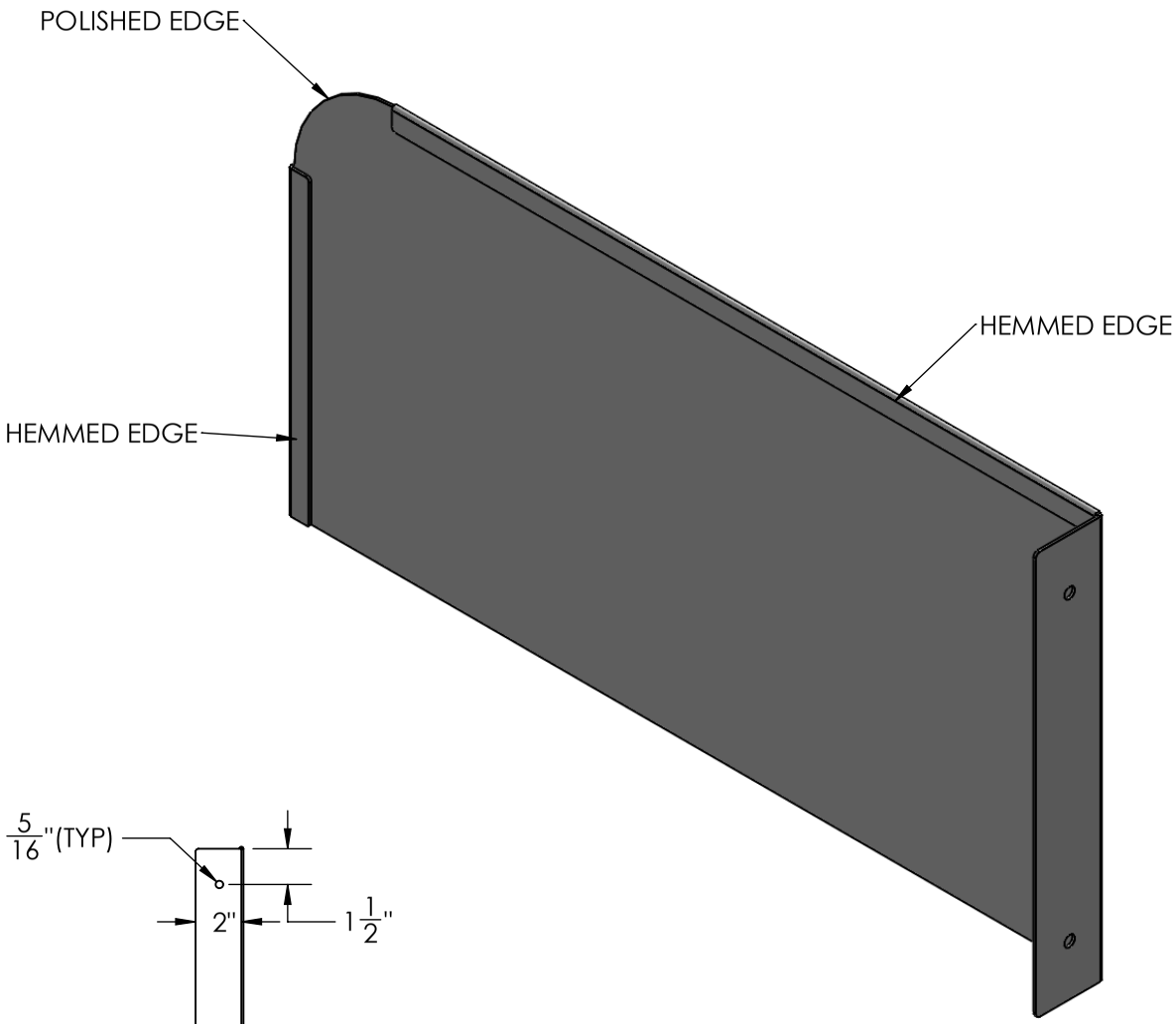


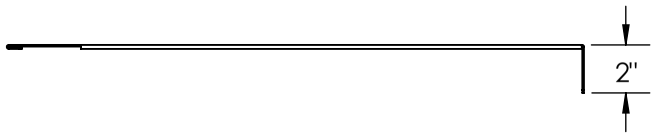


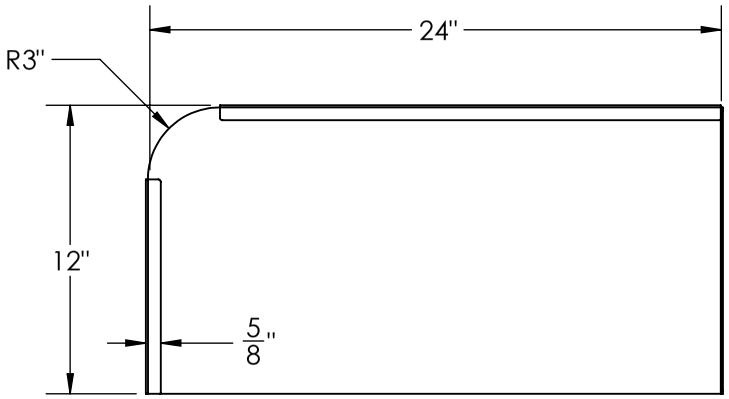





# 3ACF114: DOUBLE POLISHED 14GA S.S. SPLASH GUARD

| ATLANTA CUSTOM FABRICATORS | | |
|---|---|---|
| JOB: CFA 3ACF114 SPLASH GUARDS REVERSE | | |
| DRAWN BY: BPC | DEALER: TRIMARK STRATEGIC | |
| SCALE: NOTED | DATE: 8/24/15 | SHEET No: 1 OF 1 |
| REVISION: -- | JOB No: -- | FAB. No: -- |

ITEM #359L

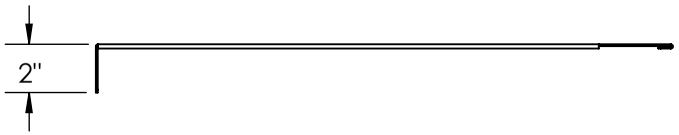


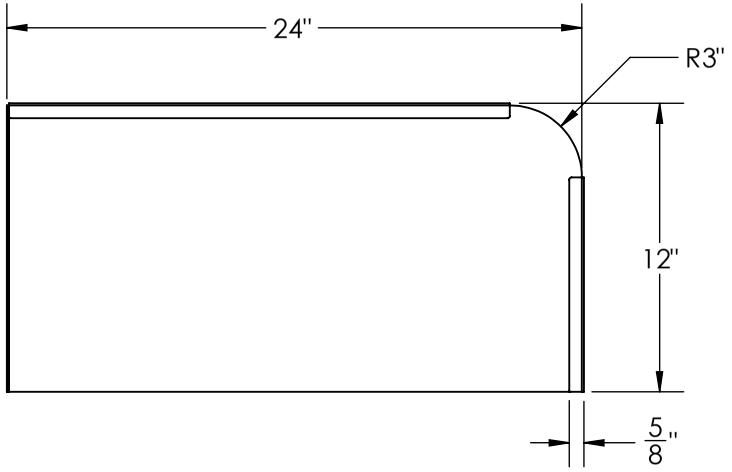


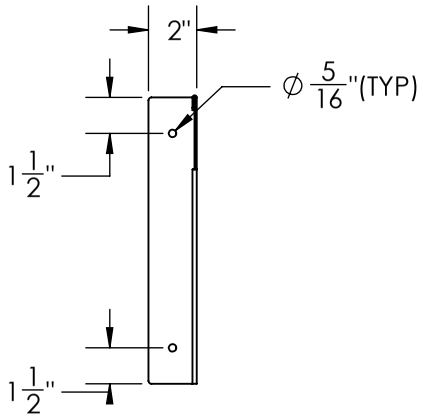


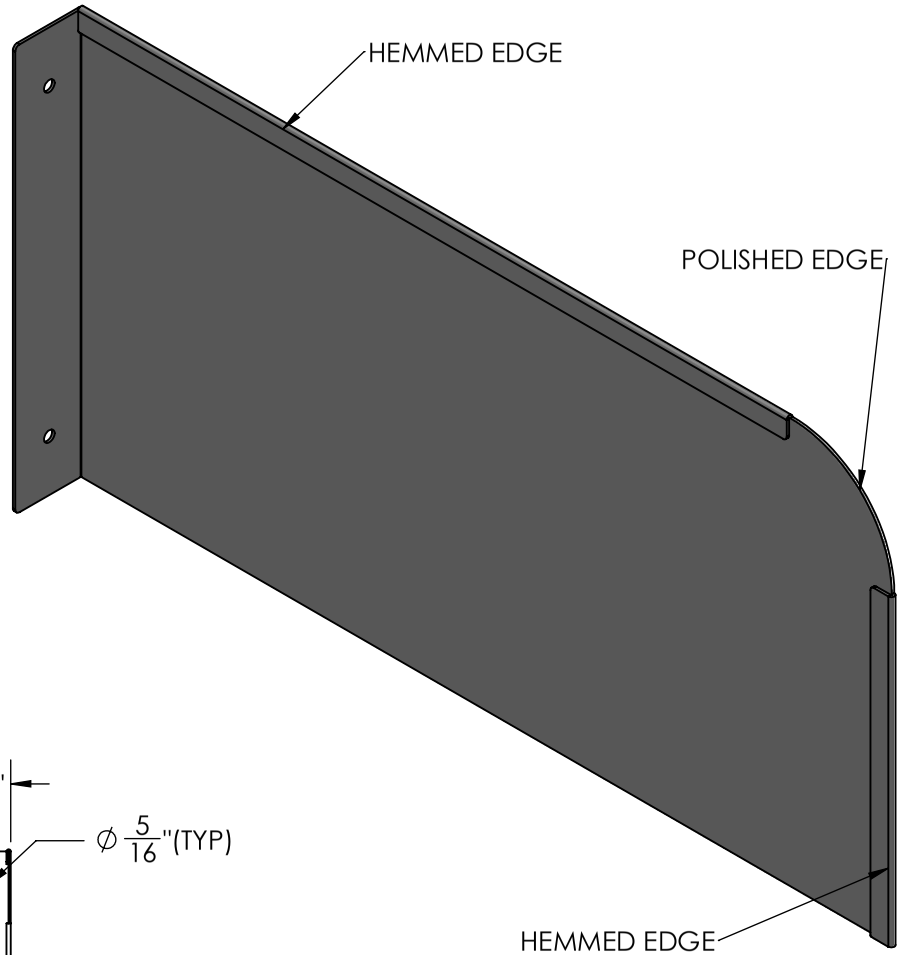


# ITEM 1: DOUBLE POLISHED 14GA S.S. SPLASH GUARD

2 REQUIRED

| ATLANTA CUSTOM FABRICATORS | | |
|---|---|---|
| JOB: CFA 3ACF051 SPLASH GUARDS | | |
| DRAWN BY: TPH | DEALER: TRIMARK STRATEGIC | |
| SCALE: NOTED | DATE: 02.06.14 | SHEET No: 1 OF 1 |
| REVISION: -- | JOB No: -- | FAB. No: -- |

ADVANCE TABCO
SMART FABRICATION™

STAINLESS STEEL

# HAND SINKS

## 12" WIDE SPACE-SAVER UNITS

**Conforms To NSF 61/9 Lead Free Requirements**

**ITEM # 360**



7-PS-22



7-PS-23



7-PS-53

*WITH SOAP & TOWEL DISPENSERS*



7-PS-84



7-PS-83



7-PS-73

**Item #:** 360 **Qty #:** _____

**Model #:** 7-PS-23

**Project #:** _____

Sink has the K-123 Faucet Delete K-123 Omit

## FEATURES:

One piece 9" x 9" x 5" **Deep Drawn** sink bowl design.

All sink bowls have a large liberal radii with a minimum dimension of 1" and are square in design.

2" stainless steel drain with strainer plate.

Units with towel dispensers use standard C-fold towels.

**Specific Features:**

**7-PS-22** - 4" O.C. K-22 deck mounted faucet with aerator.

**7-PS-83** - 4" O.C. K-22 deck mounted faucet with aerator. Liquid soap & towel dispenser with hinged towel box.

**7-PS-23** - 4" O.C. K-123 splash mounted faucet with aerator.

**7-PS-84** - 4" O.C. K-123 splash mounted faucet with aerator. Liquid soap & towel dispenser with hinged towel box.

**7-PS-53** - 4" O.C. K-175 splash mounted electronic faucet with aerator.

**7-PS-73** - 4" O.C. K-123 splash mounted faucet with aerator. Liquid soap & towel dispenser with hinged towel box.
7 3/4" high Side Splashes (from top of deck).

## CONSTRUCTION:

All TIG welded.

Welded areas blended to match adjacent surfaces and to a satin finish.

Die formed Countertop Edge with a No-Drip offset.

One sheet of stainless steel - No Seams.

## MATERIAL:

Heavy gauge type 304 series stainless steel.

Wall mounting bracket is stainless steel and of offset design.

All fittings are brass / chrome plated unless otherwise indicated.

## MECHANICAL:

Faucet supply is 1/2" IPS male thread hot and cold.

**Faucet Flow Rate:** 1.0 GPM/3.8 LPM aerator. 60 PSI.
Drains are 1-1/2" IPS.

**⚠ WARNING:**

Equipment that includes a faucet may expose you to chemicals, including lead, that are known to the State of California to cause cancer or birth defects or other reproductive harm. For more Info.,visit www.p65warnings.ca.gov.


ADVANCE TABCO
SMART FABRICATION™
www.advancetabco.com

**Customer Service Available To Assist You 1-800-645-3166 8:30 am - 7:00 pm E.S.T.**

**For Orders & Customer Service:**
**Email: customer@advancetabco.com or Fax: 631-242-6900**

**For Smart Fabrication™ Quotes:**
**Email: smartfab@advancetabco.com or Fax: 631-586-2933**

# DIMENSIONS and SPECIFICATIONS

**TOL Overall: ± .500" Interior: ± .250"** **FITTINGS SUPPLIED AS SHOWN** **ALL DIMENSIONS ARE TYPICAL**

**TOP VIEW FOR 7-PS-22**

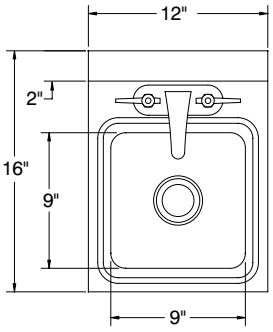


**TOP VIEW FOR 7-PS-23**

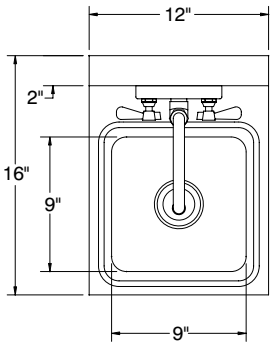


**TOP VIEW FOR 7-PS-83**

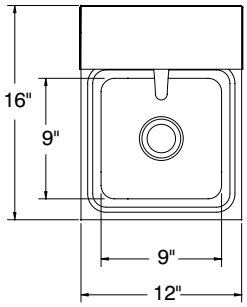


**TOP VIEW FOR 7-PS-73 & 7-PS-84**

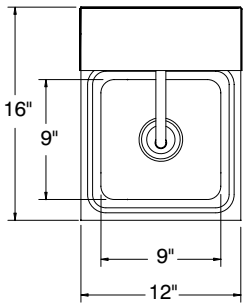


**7-PS-23**

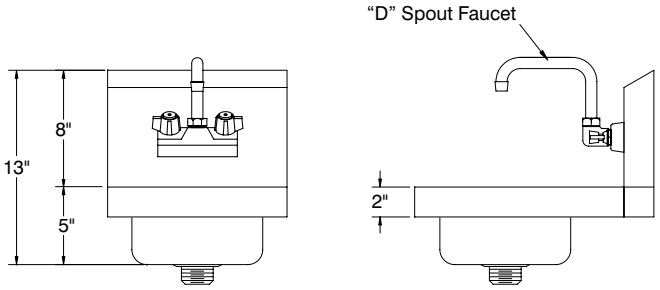


**12 lbs.**

**7-PS-83**

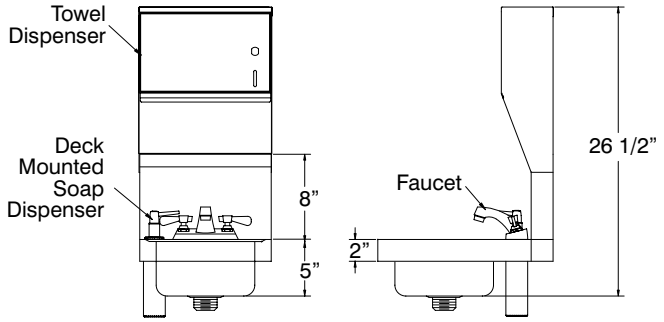


**20 lbs.**

**7-PS-22**

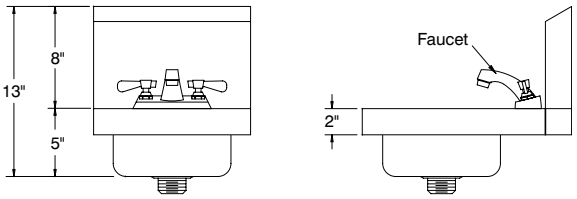


**12 lbs.**

**7-PS-84**

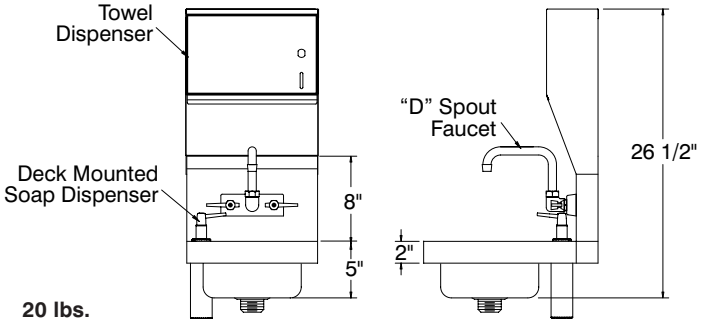


**20 lbs.**

**7-PS-53**

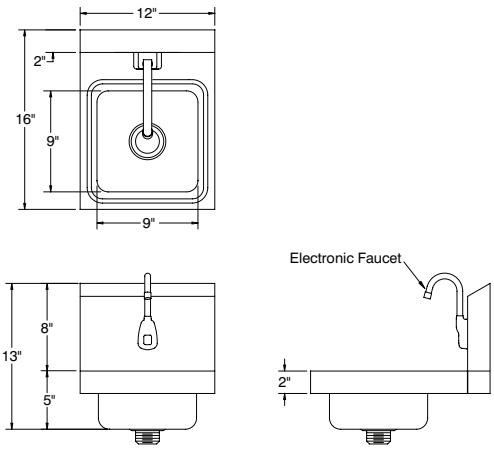


**12 lbs.**

**7-PS-73**

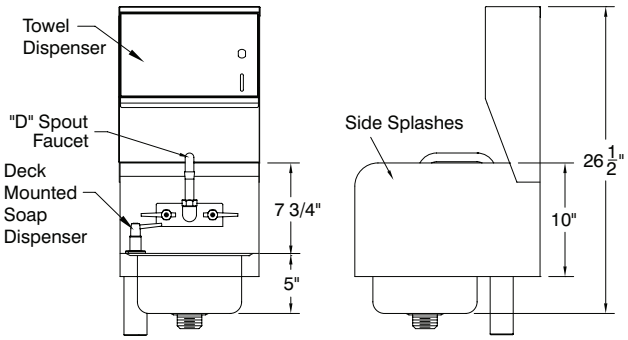


**31 lbs.**

ADVANCE TABCO
SMART FABRICATION™

ADVANCE TABCO is constantly engaged in a program of improving our products. Therefore, we reserve the right to change specifications without prior notice.

© ADVANCE TABCO, MAY 2020



325 Wireless Boulevard, Hauppauge, NY 11788

ITEM # 360E

# Model S0660-RH

*Wall Mounted, Swing Down Eye/Face Wash*

## SPECIFICATIONS:

Model S0660-RH is a wall mounted swing down eye/face wash that is installed behind the sink with ABS plastic eye/face wash spray heads. The eye/face wash swings down over the sink from the rear and the water flow is activated automatically. The eye/face wash flow is terminated once the unit has been swung back up into its original position for storage.

❑ **Model:** S0660-RH

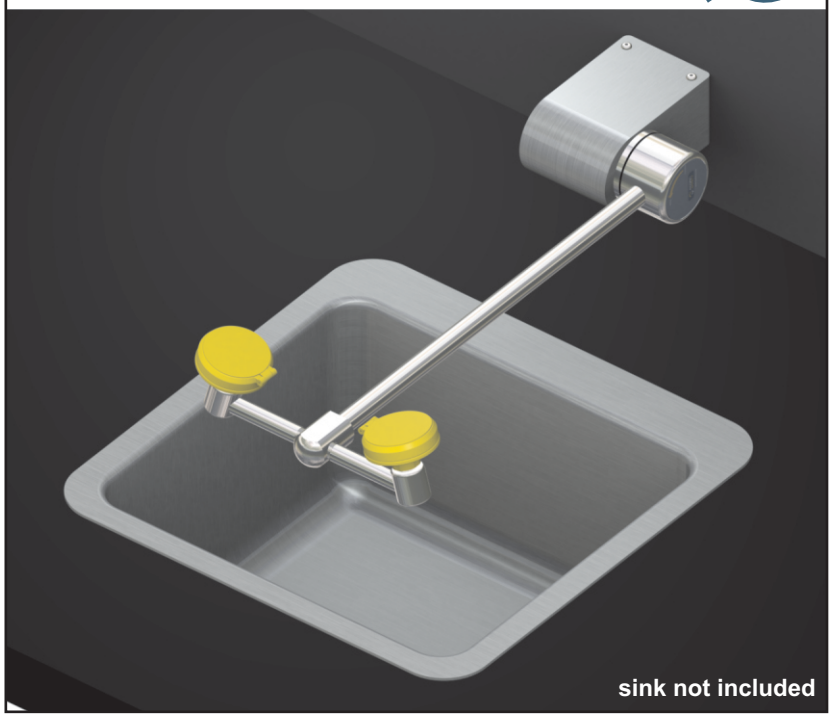


## STANDARD EQUIPMENT:

**Spray Head Assembly**: ABS yellow plastic Eye/Face Wash heads supplied by a combined integral 3.7 GPM (14 LPM) Flow Control, with integral flip Dust Covers, internal Flow Controls and Filters to remove debris from the water. An anti-microbial agent is molded into the ABS material, providing integrated protection.

**Valve:** Swing down valve is mounted behind the sink on the wall and has a 50 mesh inline strainer.

**Water Supply:** 1/2" NPT female threaded brass inlet.

**Mounting:** Wall mounted, 304 stainless steel valve housing.

**Universal Sign:** ANSI compliant, vertical identification sign.

**Weekly Test Tag:** A waterproof test card to record the date and inspector's name for weekly functional testing of the unit.

## OPTIONAL ACCESSORIES:

*Additional costs may be incurred*

| | | |
|---|---|---|
| ❑ | -AS | All stainless steel |
| ❑ | -ET71-1-BVS-OTG | Thermostatic mixing valve is ASSE Listed per the ASSE 1071 standard. The tepid output water complies with ANSI Z358.1 standard. Valve includes Ball Valve Shut-offs and Outlet Temperature Gauge |
| ❑ | -FLW2 | Flow switch, single pole |
| ❑ | -LH | Left hand mounting (Use model S0660-**LH**) |
| ❑ | -SDC | Stainless steel dust covers |

*Member of U.S. Green Building Council*

*Recyclable Product*

*Acorn Safety assumes no responsibility for use of void or superseded data. © Copyright Acorn Safety®, City of Industry, CA, Division of Acorn Engineering Company®, Member of Morris Group International™. Please visit* ***www.acorneng.com*** *for most current specifications.*

Submittal # **S0660-RH**
[EFW] Revised: 01/08/20

**Product carries the following certifications:**

*Test rating conditions are compliant to ANSI Z358.1*

*Division of Acorn Engineering Company®, Member of Morris Group International™*

**ACORN SAFETY**
P.O. Box 3527
City of Industry, CA
91744 U.S.A.
Phone 800-591-9372
626-855-4804
***www.acorneng.com***

# TECHNICAL DIMENSIONS

All dimensions are subject to manufacturer's tolerance of plus or minus 1/2" nominal and subject to change without notice. Acorn Safety® assumes no responsibility for use of void or superseded data. Dimensions may change with the addition of optional accessories. © Acorn Safety®, A Division of Acorn Engineering Company®, *Member of Morris Group International™. Please visit* ***www.acorneng.com*** *for most current specifications.*

❑ **Model S0660-RH :** *Wall Mounted, Swing Down Eye/Face Wash*

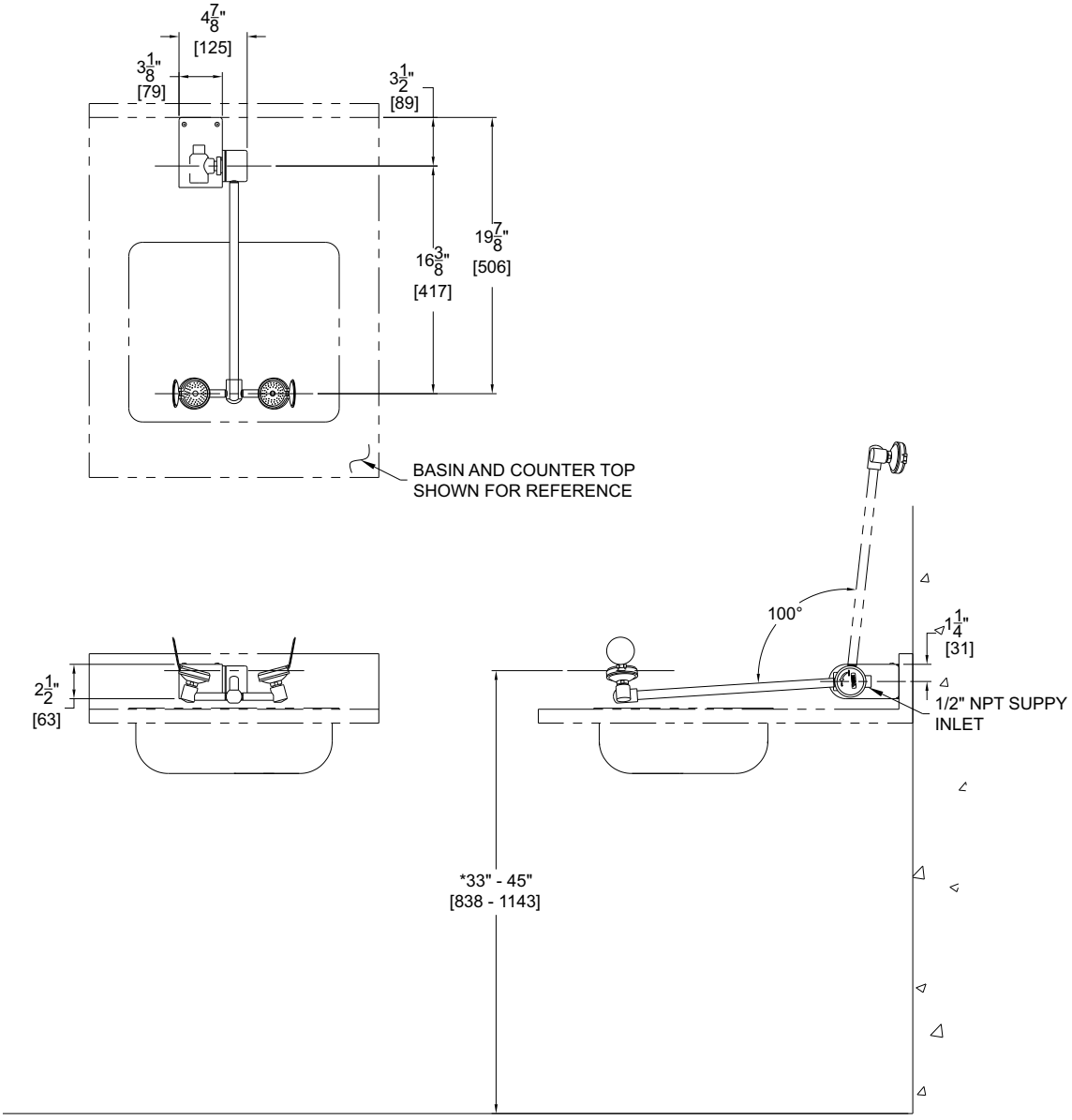


**S-0660-RH**

GENERAL NOTES:
1. ALL DIMENSIONS ARE IN INCHES [MM].
*2. ANSI Z358.1 REQUIRES NOZZLES TO BE MOUNTED BETWEEN 33" - 45" [838 - 1143] ABOVE THE FINISHED FLOOR.
3. RIGHT HAND MODEL SHOWN. LEFT HAND MODELS AVAILABLE.

⚠ WARNING: Cancer and Reproductive Harm - www.P65Warnings.ca.gov



*Acorn Safety warrants that its products are free from defects in material or workmanship under normal use and service for a period of one year from date of shipment. Acorn's liability under this warranty shall be discharged solely by replacement or repair of defective material, provided Acorn is notified in writing within one year from date of shipment, F.O.B. Industry, California.*

**SELECTION SUMMARY & APPROVAL FOR MANUFACTURING**

Model Number & Options_____ Quantity_____

Company_____

Contact_____ Title_____

Signature (Approval for Manufacturing)_____ Date _____

ACORN SAFETY®

**800-591-9372**
or 626-855-4804
**www.acorneng.com**

# T&S BRASS AND BRONZE WORKS, INC.

2 Saddleback Cove / P.O. Box 1088
Travelers Rest, SC 29690

Travelers Rest, SC: 800-476-4103 • Simi Valley, CA: 800-423-0150 • Fax: 864-834-3518 • www.tsbrass.com

Model No.
**B-2495-CFAR**

Item No.
**ITEM # 360F**

This Space for Architect/Engineer Approval

Job Name_____Date_____

Model Specified_____ Quantity_____

Customer/Wholesaler_____

Contractor_____

Architect/Engineer_____

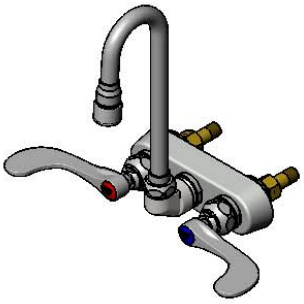

B-1146-CFA-VF05
Qty = 2

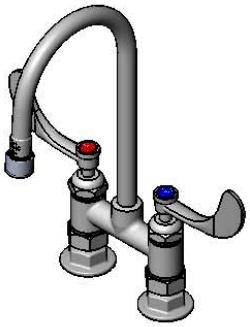

B-0328-CR-VF05
Qty = 1

B-0152-14-CRBCT
Qty = 2



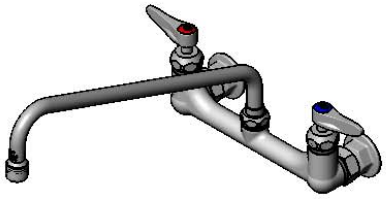

B-2299-CR
Qty =1

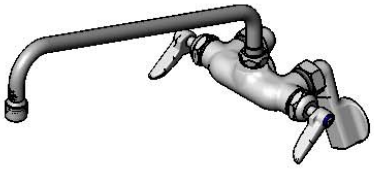

B-0236-CR-063X
Qty = 1

Product Specifications:

Chick-Fil-A Restaurant Package:
(2) B-0152-14-CRBCT, (1) B-0328-CR-VF05,
(2) B-1146-CFA-VF05, (1) B-2299-CR, (1) B-0236-CR-063X
REV#1

Product Compliance:

| Drawn: MRC | Checked: KJG | Approved: JHB | Date: 10/13/17 | Scale: 1:8 | Sheet: 1 of 1 |
|---|---|---|---|---|---|

ITEM # 360Fe

TOTO®

# TEL165 Series

## Gooseneck Wall-Mount EcoPower® Faucet

### FEATURES

- Self-generating hydropowered EcoPower system
- No minimum daily usage requirement
- Micro-sensor positioned underneath the spout head for accurate hand detection ensuring smooth and consistent water distribution
- Vandal resistant aerator housing
- Durable chrome plated spout body
- Single-hole mount
- Kit includes spout body, controller box , and mounting hardware - less supply lines
- Equipped with 0.5gpm flow control

### MODELS

☐ **TEL165-D10E**
- TELS165 (Gooseneck WM Spout)
- TELC105R-D10E (Controller: 0.09gpc, 10 sec on-demand)

☐ TEL165-D10EM
- **TEL105-D10E** (Gooseneck WM Spout Kit)
- TLM10 (Mixing Valve)

☐ TEL165-D10ET
- **TEL165-D10E** (Gooseneck WM Spout Kit)
- TLT10R (Thermostatic Mixing Valve)

☐ **TEL165-C20E**
- TELS165 (Gooseneck WM Spout)
- TELC105R-C20E (Controller: 0.19gpc, 20 sec continuous)

☐ TEL165-C20EM
- **TEL165-C20E** (Gooseneck WM Spout Kit)
- TLM10 (Mixing Valve)

☐ TEL165-C20ET
- **TEL165-C20E** (Gooseneck WM Spout Kit)
- TLT10R (Thermostatic Mixing Valve)

### COLORS/FINISHES

- #CP Polished Chrome

### OPTIONAL ACCESSORIES

- THP3158#CP - 4" Cover Plate
- THP3159#CP - 8" Cover Plate
- Laminar Flow Nozzle
  - THP3094, Laminar nozzle
  - THP3144, Gasket
  - THP3150#$$, Housing
- THP3237 - Swivel Coupling



**EcoPower**

### PRODUCT SPECIFICATION

TOTO Model #_____ The faucet shall have hydropowered self-generating, EcoPower System. The faucet shall have maximum of 10 seconds on-demand flow (0.09gpc), or 20 seconds continuous flow (0.19gpc). Product shall have anti-scald shape memory alloy thermostatic mixing valve (-ET models only). The faucet shall have self-adjusting sensor.

### CODES/STANDARDS

- Operates below federally mandated consumption limit of 0.25gpc
- Complies to California Green Building Code, CALGreen of 0.20 gpc
- Meets or exceeds ASME A112.18.1M/CSA B125.1, and NSF372-2011
- Certifications: IAPMO(cUPC), State of Massachusetts, and others
- California Green Code and City of Los Angeles Water Efficiency Ordinance
- ADA compliant
- Complies with federal and state statutes as low-lead (contains a weighted average of 0.25% lead or less)

* For codes and standards of mixing valves TLM10 and TLT10R, please refer to corresponding product spec sheets.

LOW-LEAD

# TEL165 Series

## Gooseneck Wall-Mount EcoPower® Faucet

## SPECIFICATIONS

| | |
|---|---|
| **Power Supply** | EcoPower |
| **Sensor Detection Range** | 5-1/8" - 7-7/8" (130 - 200mm)<br>Sensor is self-adjusting |
| **Water Supply Pressure** | Min (Dynamic/Flowing) Pressure: 15psi (100kPa)<br>Max (Static) Pressure: 80 psi (551kPa) |
| **Water Supply** | G1/2 (1/2 NPSM compatible) |
| **Inlet Temperature Range** | 32-110°F(0-42°C) |
| **Ambient Temperature** | 32-104°F(0-40°C) |
| **Humidity** | Max. 90% RH |
| **Flow Rate** | 0.09 gpc* - max 10 second On-Demand**<br>(0.09 gpc = 0.5 gpm x 10/60 sec)<br>Equipped with 0.5 gpm flow control |
| | 0.19 gpc* - 20 second Continuous***<br>(0.19 gpc = 0.5 gpm x 20/60 sec)<br>Equipped with 0.5 gpm flow control |
| **Warranty** | Three years |

## NOTE

Following the federal mandate for water efficiency outlined in the Environmental Protection Act of 1992, faucets can be rated for water consumption based on two categories: Flow Rate and Water Consumption. TOTO uses the water consumption standard because it is the most accurate method of measuring water use. TOTO faucets also comply with the CALGreen Guideline of water usage.

Water Saving

*On-Demand [10 sec.] faucet (0.09gpc)*
Federal Standard (0.25gpc) – 64% less
CAL Green (0.20gpc) – 55% less

*Continuous [20 sec.] faucet (0.19gpc)*
Federal Standard (0.25gpc) – 24% less
CAL Green (0.20gpc) – 5% less

*Gallons per cycle (gpc) is the amount of water per usage cycle .
** On-demand refers to the way in which the water is dispersed (i.e.; water is only dispersed when the sensor is activated by the user as needed).
*** Continuous means that water is dispersed for a continuous 20 second cycle

### Gooseneck Wall-Mount

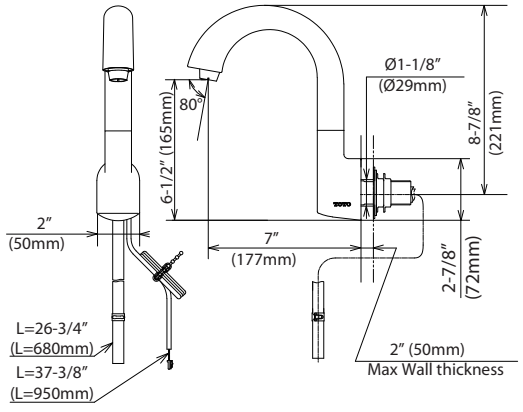


### Controller

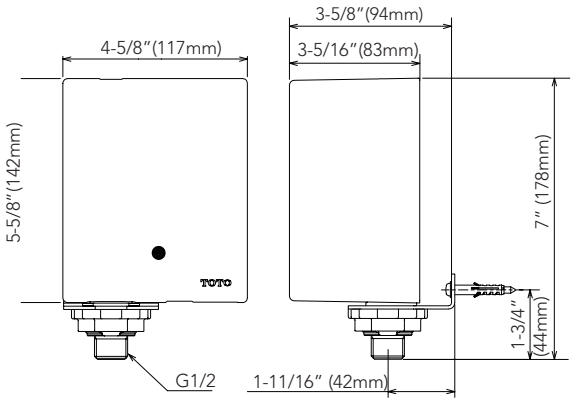


### Available Mixing Valves

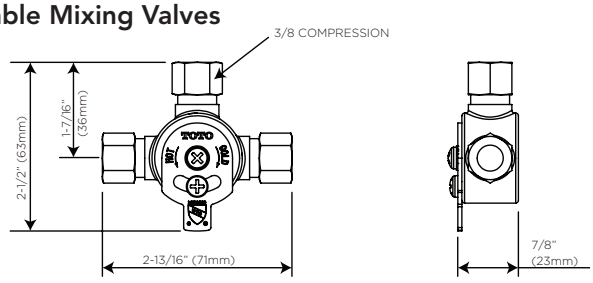


**Hot/Cold Mixing Tee (TLM10)**

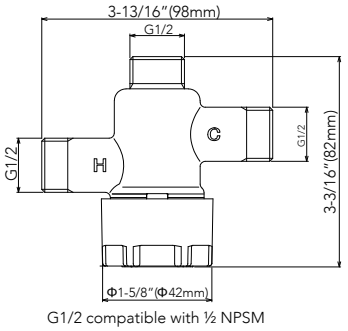


**Thermostatic Mixing Valve (TLT10R)**

ADVANCE TABCO®
SMART FABRICATION™

*STAINLESS STEEL*

# REGALINE SINKS

## Three Compartments - Two Drainboards

**ITEM # 364**

Item #: 364 Qty #: _____

Model #: 94-63-54-18RL

Project #: _____



**93 & 9 SERIES**
Welded Side
Cross-Bracing

**YES! It's SeaMLess!**



**94 SERIES**
Welded Side & Adjustable
Front & Rear Cross-Bracing

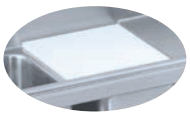

Recessed Bowl Surface
Accommodates
Poly-Vance Cutting Boards
& Sink Covers

NSF

### FEATURES:

Tile edge for ease of installation.

One piece **Deep Drawn** sink bowls with integral drainboards with splash.

All sink bowls have a large liberal 3" radius.

Placement of the welded leg assembly ensures stability and furnishes direct support of the column load requirement for the entire sink unit.

**"94" Series** is supplied with adjustable front and rear cross brace featuring leg clamps to secure left to right cross bracing.

### CONSTRUCTION:

All TIG welded.

Welded areas blended to match adjacent surfaces and to a satin finish.

Gussets welded to a die-embossed reinforcing channel.

### MATERIALS:

**Spec-Line** (94 Series): 14 gauge type 304 stainless steel 11" High Splash.

**Standard** (93 Series): 16 gauge type 304 stainless steel 8" High Splash.

**Super Saver** (9 Series): 18 gauge type 304 stainless steel 8" High Splash.

**LEGS:**
- 1 5/8" diameter tubular stainless steel.
- Stainless steel gussets & channels.
- Stainless Steel 1" adjustable bullet feet.

| Bowl Size | O.A. Length | DRBD. Size | SPEC-LINE 94 Series Model # | WT. | STANDARD 93 Series Model # | WT. | SUPER SAVER 9 Series Model # | WT. | Cu. Ft. |
|---|---|---|---|---|---|---|---|---|---|
| | | | 14 Ga. 304 S/S 14" Water Level | | 16 Ga. 304 S/S 12" Water Level | | 18 Ga. 304 S/S 12" Water Level | | |
| 16" x 20" | 91" | 18" | 94-3-54-18RL | 230 lbs. | 93-3-54-18RL | 189 lbs. | 9-3-54-18RL | 182 lbs. | 49 |
| | 103" | 24" | 94-3-54-24RL | 248 lbs. | 93-3-54-24RL | 197 lbs. | 9-3-54-24RL | 190 lbs. | 55 |
| | 127" | 36"* | 94-3-54-36RL | 275 lbs. | 93-3-54-36RL | 239 lbs. | 9-3-54-36RL | 208 lbs. | 96 |
| 20" x 20" | 103" | 18" | 94-23-60-18RL | 248 lbs. | 93-23-60-18RL | 203 lbs. | 9-23-60-18RL | 198 lbs. | 59 |
| | 115" | 24" | 94-23-60-24RL | 276 lbs. | 93-23-60-24RL | 220 lbs. | 9-23-60-24RL | 195 lbs. | 65 |
| | 139" | 36"* | 94-23-60-36RL | 408 lbs. | 93-23-60-36RL | 387 lbs. | 9-23-60-36RL | 364 lbs. | 89 |
| 18" x 24" | 97" | 18" | 94-63-54-18RL | 323 lbs. | 93-63-54-18RL | 289 lbs. | 9-63-54-18RL | 226 lbs. | 62 |
| | 109" | 24" | 94-63-54-24RL | 334 lbs. | 93-63-54-24RL | 304 lbs. | 9-63-54-24RL | 233 lbs. | 85 |
| | 133" | 36"* | 94-63-54-36RL | 418 lbs. | 93-63-54-36RL | 367 lbs. | 9-63-54-36RL | 325 lbs. | 96 |
| 24" x 24" | †127" | 24" | 94-43-72-24RL | 390 lbs. | 93-43-72-24RL | 331 lbs. | 9-43-72-24RL | 318 lbs. | 98 |
| | †151" | 36"* | 94-43-72-36RL | 448 lbs. | 93-43-72-36RL | 393 lbs. | 9-43-72-36RL | 345 lbs. | 110 |
| 20" x 28" | 103" | 18" | 94-83-60-18RL | 358 lbs. | 93-83-60-18RL | 315 lbs. | 9-83-60-18RL | 277 lbs. | 83 |
| | 115" | 24" | 94-83-60-24RL | 394 lbs. | 93-83-60-24RL | 346 lbs. | 9-83-60-24RL | 305 lbs. | 95 |
| | 139" | 36"* | 94-83-60-36RL | 451 lbs. | 93-83-60-36RL | 398 lbs. | 9-83-60-36RL | 350 lbs. | 109 |
| | | | 14" Water Level 17" Flood Level | | 12" Water Level 15" Flood Level | | 12" Water Level 15" Flood Level | | |

*** Regalines with 36" Drainboards are Supplied with Two Additional Legs (per drainboard) for Support.**

**† Requires Two Faucets**

*Weights & Cubes Are Approximate*


ADVANCE TABCO®
SMART FABRICATION™
www.advancetabco.com

**Customer Service Available To Assist You 1-800-645-3166 8:30 am - 7:00 pm E.S.T.**

**For Orders & Customer Service:**
**Email:** customer@advancetabco.com or **Fax:** 631-242-6900

**For Smart Fabrication™ Quotes:**
**Email:** smartfab@advancetabco.com or **Fax:** 631-586-2933

# DIMENSIONS and SPECIFICATIONS

TOL Overall: ± .500”
Interior: ± .250”

ALL DIMENSIONS ARE TYPICAL

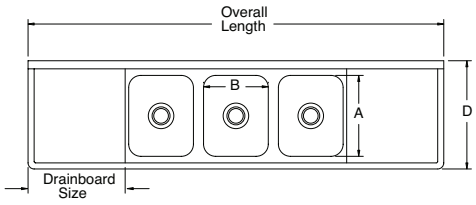


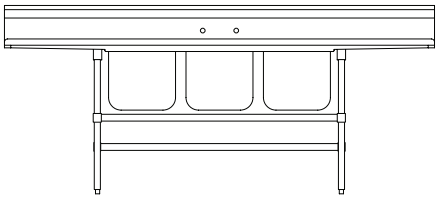

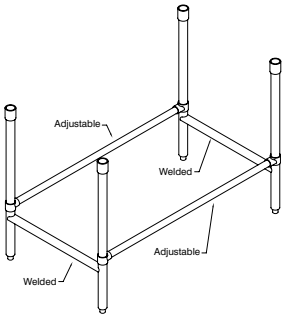


**94 Series Includes front & Rear Adjustable Cross Bracing (Shown Above)**

## DESCRIPTION

| BOWL (SIZE) | Overall Length | DRBD (SIZE) | Recommended Use | A | B | C | D | 94 SERIES V | 94 SERIES W | 94 SERIES X | 94 SERIES Y | 94 SERIES Z | 9 & 93 SERIES V | 9 & 93 SERIES W | 9 & 93 SERIES X | 9 & 93 SERIES Y | 9 & 93 SERIES Z |
|---|---|---|---|---|---|---|---|---|---|---|---|---|---|---|---|---|---|
| 16x20 | 91”<br>103”<br>127” | 18”<br>24”<br>*36” | DISH SINKS | 20” | 16” | 13 5/8” | 27” | **38”** | **11”** | **14”** | **20”** | **45”** | 38” | 8” | 12” | 22” | 42” |
| 20x20 | 103”<br>115”<br>139” | 18”<br>24”<br>*36” | DISH & POT SINKS | 20” | 20” | 13 5/8” | 27” | **38”** | **11”** | **14”** | **20”** | **45”** | 38” | 8” | 12” | 22” | 42” |
| 18x24 | 97”<br>109”<br>133” | 18”<br>24”<br>*36” | POT & PAN SINKS | 24” | 18” | 15 5/8” | 31” | **38”** | **11”** | **14”** | **20”** | **45”** | 38” | 8” | 12” | 22” | 42” |
| 24x24 | †127”<br>†151” | 24”<br>*36” | POT SINKS | 24” | 24” | 15 5/8” | 31” | **38”** | **11”** | **14”** | **20”** | **45”** | 38” | 8” | 12” | 22” | 42” |
| 20x28 | 103”<br>115”<br>139” | 18”<br>24”<br>*36” | PAN SINKS | 28” | 20” | 17 5/8” | 35” | **38”** | **11”** | **14”** | **20”** | **45”** | 38” | 8” | 12” | 22” | 42” |

**† Requires Two Faucets**

*** Regalines with 36” Drainboards are Supplied with Two Additional Legs (per drainboard) for Support.**

## PLUMBING ROUGH-IN

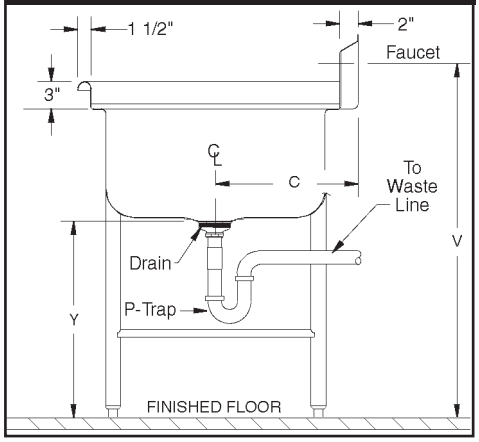


## MECHANICAL:

- Supply is 1/2” IPS hot & cold.
- Faucet holes on 8” centers.
- Faucets are not included **(see accessories)**.
- Waste drains are 1 1/2” IPS S/S basket type, located in center of sink bowl, and are included.

## SECTION

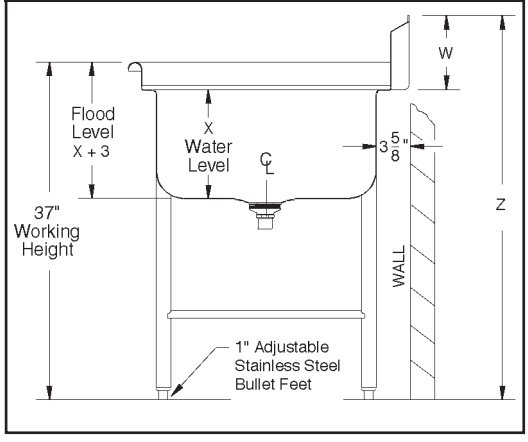


ADVANCE TABCO
SMART FABRICATION™

ADVANCE TABCO is constantly engaged in a program of improving our products. Therefore, we reserve the right to change specifications without prior notice.



325 Wireless Boulevard, Hauppauge, NY 11788

© ADVANCE TABCO, SEPTEMBER 2019

# Pre-Rinse Units

## B-0152-14-CRBCT

**TAG:** **ITEM # 364F**

EasyInstall *Pre-Rinse Unit*

**Architect/Engineering Specifications:**

8” wall mount mixing faucet with polished chrome plated brass body, add-on faucet with ceramic cartridge and lever handle, 14” swing nozzle with stream regulator outlet, 12” riser, rigid tee with plug, 44” flexible stainless steel hose with heat resistant handle, 0.65 GPM low flow spray valve, ceramic cartridges with check valves, lever handles, 1/2" NPT female inlets, 6” adjustable wall bracket, spray valve holder and overhead spring. Certified to ASME A112.18.1/CSA B125.1, NSF 61-Section 9 and NSF 372. 2019 DOE PRSV - Class I compliant.

Job Name_____
Model Specified_____Quantity_____
Variations Specified_____
Date_____

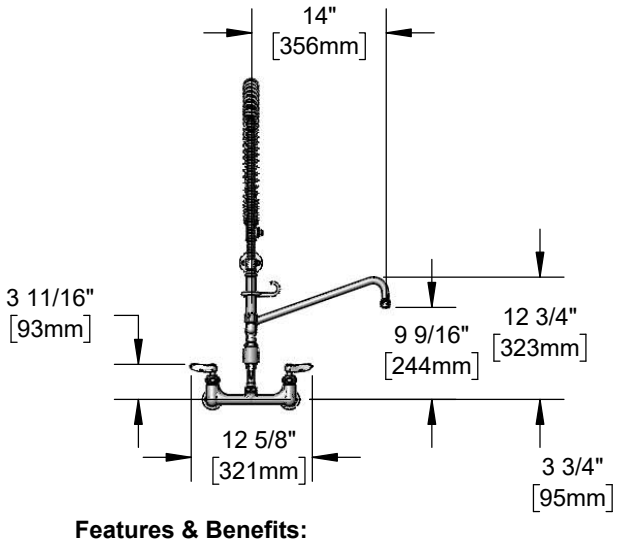


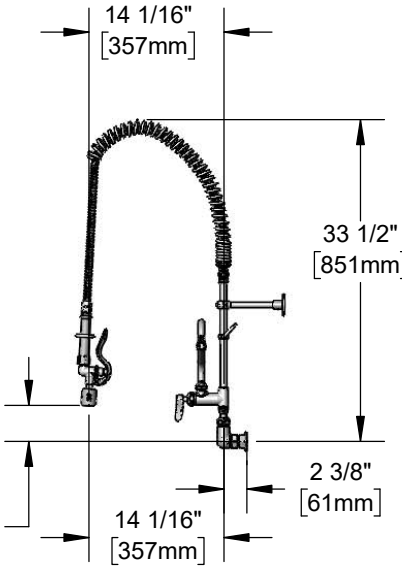




**Features & Benefits:**

- 8” wall mount mixing faucet w/ polished chrome plated brass body
- EasyInstall add-on faucet w/ polished chrome plated brass body for quick installation
- 14” swing nozzle w/ stream regulator outlet, Series 1
- 12” rigid riser
- Rigid tee with plug
- 44” flexible stainless steel hose w/ heat resistant gray handle and hold down ring
- 0.65 GPM low flow spray valve
- Quarter-turn Cerama cartridges w/ check valves to prevent cross flow of water
- Lever handles w/ color coded indexes
- 1/2" NPT female eccentric inlets with Ø 2" flanges
- Adjustable centers from 7 3/4" to 8 1/4"
- 6” adjustable wall bracket
- Material: Polished chrome plated brass body, add-on faucet, riser, tubular spout & spray valve body, stainless steel hose and chrome plated metal handles

**Optional Add-On Faucet Outlets (Series 1 / VR Series 6)**

| GPM | Aerated | VR Aerated (VR Laminar) |
|---|---|---|
| 1.0 | ☐ B-0199-01-F10 | ☐ B-0199-06-F10 |
| 1.5 | ☐ B-0199-01-WS | ☐ B-0199-06-WS |
| 2.2 | ☐ B-0199-01 | ☐ B-0199-06 |

**Product Compliance:**

- ASME A112.18.1 / CSA B125.1
- NSF 61 - Section 9
- NSF 372 (Low Lead Content)
- 2019 DOE PRSV - Class I

**Warranty:** Three Year (Limited)

- Cerama Cartridge: Lifetime (Limited)

**Performance Data:**

- Pressure: 20 - 125 psi
- Temperature: 40 °F - 140 °F
- Flow Rate:
  Spray Valve: 0.65 GPM @ 60 psi
  Add-On Faucet: 5.35 GPM @ 60 psi

**Optional Cartridges With Checks**

☐ Quarter-Turn Cerama w/ Check Valve (Standard)
☐ Quarter-Turn Eterna w/ Spring Check

**Optional Pre-Rinse Spray Valves**

☐ B-0107 (1.15 GPM)
☐ B-0107-C (0.65 GPM) (Standard)
☐ B-0107-J (1.07 GPM)
☐ B-0108 (1.07 GPM)
☐ B-0108-C (0.65 GPM)

**Optional Handles**

☐ 4" Wrist Action
☐ Lever (Standard)
☐ 4-Arm

**T&S BRASS AND BRONZE WORKS, INC.**
• 2 Saddleback Cove • Travelers Rest, SC 29690
Ph 800-476-4103 • Fax 864-834-3518
• Simi Valley, CA • Ph 800-423-0150 • www.tsbrass.com

Date: 09/20/19

ITEM # 366

ADVANCE TABCO
SMART FABRICATION™

*STAINLESS STEEL*

# NSF FABRICATED ECONOMY SINKS

## One & Two Compartments



**FC-1-1818 Shown**



**FC-2-1818-18R Shown**

Item #: 366 Qty #: _____

Model #: FC-1-1620-18R

Project #: _____

Sink includes the K-472 faucet hole revision



Rolled Rim Edge For Additional Strength

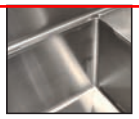

Fabricated Bowls are Welded Together at the Seams

### FEATURES:

Backsplash has tile edge for ease of installation.

Sink bowls are 3/4" coved corner and meet NSF requirements.

Rolled Rim Edge for additional strength.

Sink Bowls are 14" deep for greater capacity.

Adjustable front-to-back cross-bracing.

### MATERIAL:

1 5/8" diameter stainless steel legs with 1" adjustable stainless steel bullet feet.

Entire unit is 16 gauge 304 stainless steel.

Gussets - stainless steel.

### MECHANICAL:

- Supply is 1/2" IPS hot & cold.
- Faucet holes on 8" centers.
- Faucets are not included **(see accessories)**.
- Waste drains are 1 1/2" IPS S/S basket type, located in center of sink bowl, and are included.

### CONSTRUCTION:

All TIG welded.

Welded areas blended to match adjacent surfaces and to a satin finish.

Gussets welded to a die-formed reinforced plate.

### OPTIONAL:

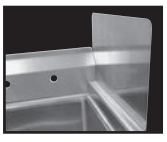

**K-700**
Removable
Side Splashes
Fits Left OR Right
Side

| | MODEL # | Length L | Width W | Bowl Size A & B | Drbd. Length C | # of Drbrds. | Drbrd. Location | Wt |
|---|---|---|---|---|---|---|---|---|
| ONE COMPARTMENT | FC-1-1620 | 21" | 26" | | N/A | 0 | None | 50 lbs. |
| | FC-1-1620-18RorL | 36 1/2" | 26" | 16"x20" | 18" | 1 | Specify | 65 lbs. |
| | FC-1-1620-18RL | 52" | 26" | | 18" | 2 | R & L | 80 lbs. |
| | FC-1-1818 | 23" | 24" | | N/A | 0 | None | 60 lbs. |
| | FC-1-1818-18RorL | 38 1/2" | 24" | | 18" | 1 | Specify | 65 lbs. |
| | FC-1-1818-24RorL | 44 1/2" | 24" | 18"x18" | 24" | 1 | Specify | 70 lbs. |
| | FC-1-1818-18RL | 54" | 24" | | 18" | 2 | R & L | 90 lbs. |
| | FC-1-1818-24RL | 66" | 24" | | 24" | 2 | R & L | 100 lbs. |
| | FC-1-1824 | 23" | 30" | | N/A | 0 | None | 67 lbs. |
| | FC-1-1824-18RorL | 38 1/2" | 30" | | 18" | 1 | Specify | 105 lbs. |
| | FC-1-1824-24RorL | 45" | 30" | 18"x24" | 24" | 1 | Specify | 115 lbs. |
| | FC-1-1824-18RL | 54" | 30" | | 18" | 2 | R & L | 120 lbs. |
| | FC-1-1824-24RL | 66" | 30" | | 24" | 2 | R & L | 130 lbs. |
| | FC-1-2424 | 29" | 30" | | N/A | 0 | None | 90 lbs. |
| | FC-1-2424-18RorL | 45" | 30" | | 18" | 1 | Specify | 118 lbs. |
| | FC-1-2424-24RorL | 50 1/2" | 30" | 24"x24" | 24" | 1 | Specify | 123 lbs. |
| | FC-1-2424-18RL | 60" | 30" | | 18" | 2 | R & L | 135 lbs. |
| | FC-1-2424-24RL | 72" | 30" | | 24" | 2 | R & L | 145 lbs. |
| TWO COMPARTMENTS | FC-2-1515 | 35" | 21" | 15"x15" | N/A | 0 | None | 78 lbs. |
| | FC-2-1620 | 37" | 26" | | N/A | 0 | None | 85 lbs. |
| | FC-2-1620-18RorL | 52 1/2" | 26" | 16"x20" | 18" | 1 | Specify | 100 lbs. |
| | FC-2-1620-18RL | 68" | 26" | | 18" | 2 | R & L | 118 lbs. |
| | FC-2-1818 | 41" | 24" | | N/A | 0 | None | 83 lbs. |
| | FC-2-1818-18RorL | 56 1/2" | 24" | 18"x18" | 18" | 1 | Specify | 90 lbs. |
| | FC-2-1818-18RL | 72" | 24" | | 18" | 2 | R & L | 105 lbs. |
| | FC-2-1818-24RL | 84" | 24" | | 24" | 2 | R & L | 115 lbs. |
| | FC-2-1824 | 41" | 30" | | N/A | 0 | None | 115 lbs. |
| | FC-2-1824-18RorL | 56 1/2" | 30" | | 18" | 1 | Specify | 130 lbs. |
| | FC-2-1824-24RorL | 62 1/2" | 30" | 18"x24" | 24" | 1 | Specify | 140 lbs. |
| | FC-2-1824-18RL | 72" | 30" | | 18" | 2 | R & L | 145 lbs. |
| | FC-2-1824-24RL | 84" | 30" | | 24" | 2 | R & L | 160 lbs. |
| | FC-2-2424 | 53" | 30" | | N/A | 0 | None | 138 lbs. |
| | FC-2-2424-18RorL | 68 1/2" | 30" | | 18" | 1 | Specify | 155 lbs. |
| | FC-2-2424-18RL | 84" | 30" | 24"x24" | 18" | 2 | R & L | 210 lbs. |
| | FC-2-2424-24RorL | 74 1/2" | 30" | | 24" | 1 | Specify | 195 lbs. |
| | FC-2-2424-24RL | 96" | 30" | | 24" | 2 | R & L | 225 lbs. |


ADVANCE TABCO
SMART FABRICATION™
www.advancetabco.com

**Customer Service Available To Assist You 1-800-645-3166 8:30 am - 7:00 pm E.S.T.**

**For Orders & Customer Service:**
**Email:** customer@advancetabco.com or **Fax:** 631-242-6900

**For Smart Fabrication™ Quotes:**
**Email:** smartfab@advancetabco.com or **Fax:** 631-586-2933

# DIMENSIONS and SPECIFICATIONS

TOL Overall: ± .500”
Interior: ± .250”

ALL DIMENSIONS ARE TYPICAL

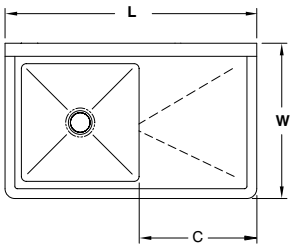


**1 COMP - 1 DRBD**

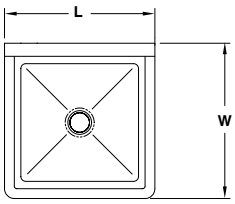


**1 COMP**

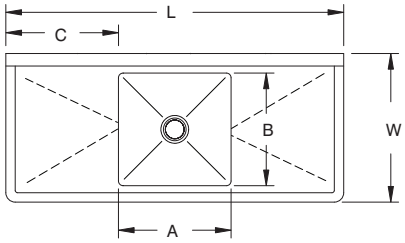


**1 COMP - 2 DRBDS**

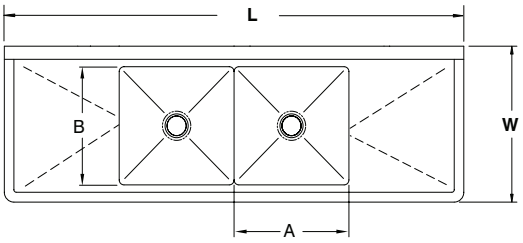


**2 COMP - 2 DRBD**

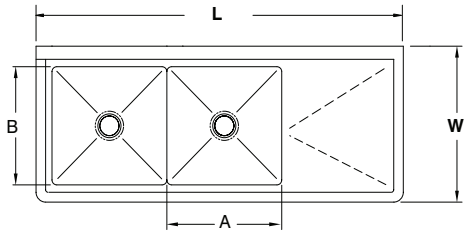


**2 COMP - 1 DRBD**

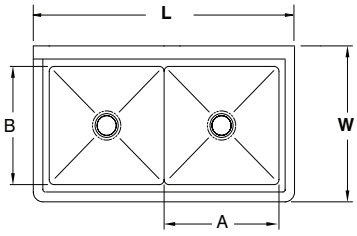


**2 COMP**

## PLUMBING ROUGH-IN

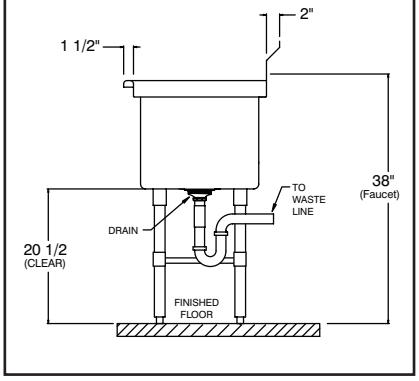


## SECTION

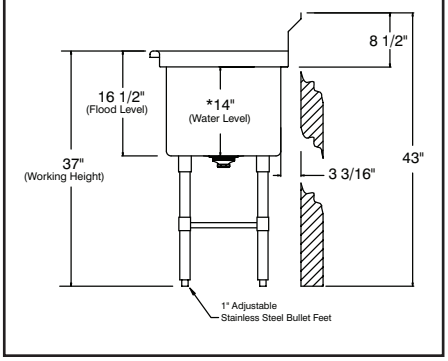


NSF

| ACCESSORIES | Model # | Qty |
|---|---|---|
| DRAINS | | |
| FAUCETS | | |
| | | |

**OPTIONAL MODIFICATIONS:**

| | |
|---|---|
| **K-450** | Extend Drainboard Length<br>*(Drainboards over 36” Are Not Creased or Pitched.)* |
| **K-470** | Modify Bowl Depth |

**See our full line of Modifications & Accessories on the web!**

ADVANCE TABCO
SMART FABRICATION™

325 Wireless Boulevard, Hauppauge, NY 11788

ADVANCE TABCO is constantly engaged in a program of improving our products. Therefore, we reserve the right to change specifications without prior notice.



© ADVANCE TABCO, NOVEMBER 2019

# Pre-Rinse Units

## B-0154-CR-C

**TAG:** **ITEM # 366F**

EasyInstall *Pre-Rinse Unit*

**Architect/Engineering Specifications:**

8” wall mount mixing faucet with polished chrome plated brass body, add-on faucet with ceramic cartridge and lever handle, 15” double joint swing nozzle with 2.2 GPM aerator, 12” riser, 44” flexible stainless steel hose with heat resistant handle, 0.65 GPM low flow spray valve, ceramic cartridges with check valves, lever handles, 1/2" NPT female inlets, 6” adjustable wall bracket, spray valve holder and overhead spring. Certified to ASME A112.18.1/CSA B125.1, NSF 61-Section 9 and NSF 372. 2019 DOE PRSV - Class I compliant.

Job Name_____
Model Specified_____Quantity_____
Variations Specified_____
Date_____

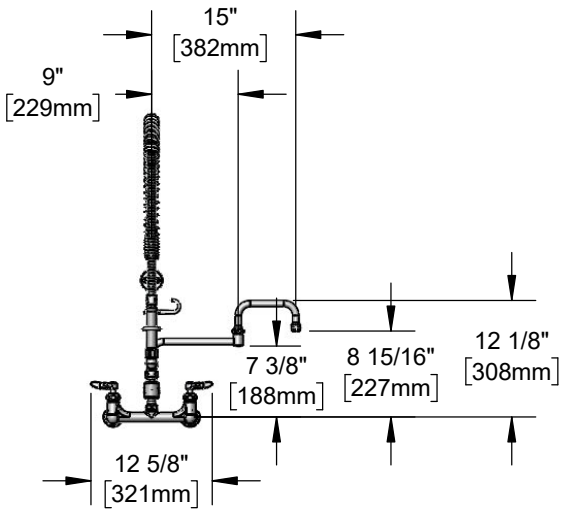


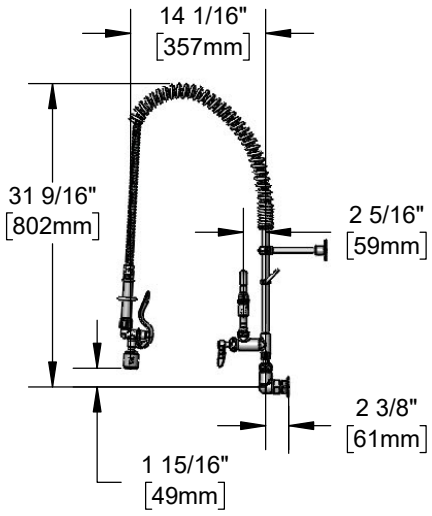


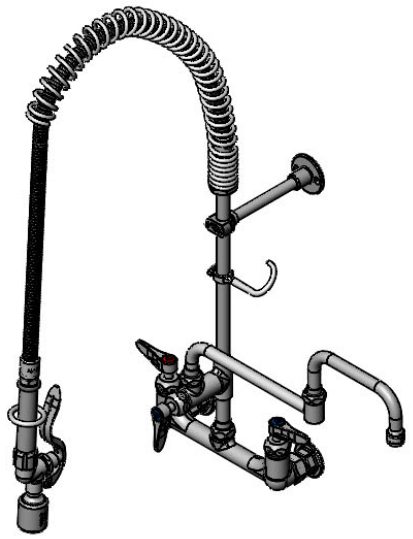

**Features & Benefits:**

- 8” wall mount mixing faucet w/ polished chrome plated brass body
- EasyInstall add-on faucet w/ polished chrome plated brass body
- 15” double joint swing nozzle
- 2.2 GPM aerator, Series 1 (B-0199-01)
- 12” rigid riser
- 44” flexible stainless steel hose w/ heat resistant gray handle hold down ring
- 0.65 GPM low flow spray valve
- Quarter-turn Cerama cartridges w/ check valves to prevent cross flow of water
- Lever handles w/ color coded indexes
- 1/2" NPT female eccentric inlets with Ø 2" flanges
- Adjustable centers from 7 3/4” to 8 1/4”
- 6” adjustable wall bracket
- Material: Polished chrome plated brass body, riser and spray valve, stainless steel hose and chrome plated metal handles

**Product Compliance:**

- ASME A112.18.1 / CSA B125.1
- NSF 61 - Section 9
- NSF 372 (Low Lead Content)
- 2019 DOE PRSV - Class I

**Warranty:** Three Year (Limited)

- Cerama Cartridge: Lifetime (Limited)

**Performance Data:**

- Pressure: 20 - 125 psi
- Temperature: 40 °F - 140 °F
- Flow Rate: Spray Valve: 0.65 GPM @ 60 psi
  Add-On Faucet: 2.2 GPM @ 60 psi

**Optional Add-On Faucet Outlets (Series 1 / VR Series 6)**

| GPM | Aerated | VR Aerated (VR Laminar) |
|---|---|---|
| 1.0 | ☐ B-0199-01-F10 | ☐ B-0199-06-F10 |
| 1.5 | ☐ B-0199-01-WS | ☐ B-0199-06-WS |
| 2.2 | Standard | ☐ B-0199-06 |

**Optional Cartridges With Checks**

☐ Quarter-Turn Cerama w/ Check Valve (Standard)
☐ Quarter-Turn Eterna w/ Spring Check

**Optional Handles**

☐ 4" Wrist Action
☐ Lever (Standard)
☐ 4-Arm

**Optional Pre-Rinse Spray Valves**

☐ B-0107 (1.15 GPM)
☐ B-0107-C (0.65 GPM) (Standard)
☐ B-0107-J (1.07 GPM)
☐ B-0108 (1.07 GPM)
☐ B-0108-C (0.65 GPM)

**T&S BRASS AND BRONZE WORKS, INC.**
• 2 Saddleback Cove • Travelers Rest, SC 29690
Ph 800-476-4103 • Fax 864-834-3518
• Simi Valley, CA • Ph 800-423-0150 • www.tsbrass.com

Date: 09/20/19

# Swivel Sink and Pantry Faucts

## B-0236-CR-063X

**TAG: ITEM # 367FW**

*Double Pantry Faucet*

**Architect/Engineering Specifications:**

Wall mount mixing faucet with polished chrome plated brass body, 14” swing nozzle with stream regulator outlet, ceramic cartridges with check valves, lever handles and 1/2” NPT female adjustable arm inlets. Certified to ASME A112.18.1/CSA B125.1, NSF 61-Section 9 and NSF 372. Meets ADA ANSI/ICC A117.1 requirements.

Job Name_____
Model Specified_____Quantity_____
Variations Specified_____
Date_____



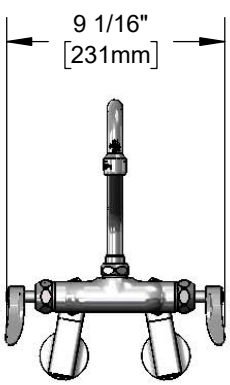


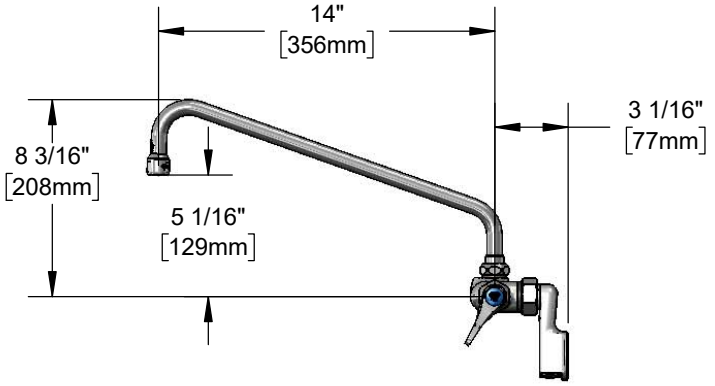


**Features & Benefits:**

- Adjustable inlet wall mount mixing faucet with polished chrome plated brass body
- 14” swing nozzle
- Lock washer included for rigid applications
- Stream regulator outlet, Series 1
- Quarter-turn Cerama cartridges with check valves to prevent crossflow of water
- Lever handles w/ color coded indexes
- 1/2” NPT female adjustable arm inlets w/ ∅ 2” flanges
- Adjustable centers from 2 1/4” to 8 1/4” above or below centerline
- Material: Polished chrome plated brass body & tubular spout and chrome plated metal handles

Product Compliance:

- ASME A112.18.1 / CSA B125.1
- NSF 61 - Section 9
- NSF 372 (Low Lead Content)
- ANSI A117.1 (ADA)

**Warranty:** One Year (Limited)

Cerama: Lifetime (Limited)

ADA Compliant

**Performance Data:**

- Pressure: 20 - 125 psi
- Temperature: 40 °F -180 °F
- Flow Rate: 9.48 GPM @ 60 psi

**Optional Outlets (Series 1 / VR Series 6)**

| GPM | Aerated | Non-Aerated (Laminar) | VR Aerated | VR Non-Aerated (VR Laminar) |
|---|---|---|---|---|
| 0.35 | N/A | ☐ B-0199-01-N035 | N/A | ☐ B-0199-06-N035 |
| 0.5 | N/A | ☐ B-0199-01-N05 | N/A | ☐ B-0199-06-N05 |
| 1.0 | ☐ B-0199-01-F10 | N/A | ☐ B-0199-06-F10 | N/A |
| 1.2 | ☐ B-0199-01-F12 | ☐ B-0199-01-LF12 | ☐ B-0199-06-F12 | ☐ B-0199-06-LF12 |
| 1.5 | ☐ B-0199-01-WS | ☐ B-0199-29 | ☐ B-0199-06-WS | ☐ B-0199-29VR |
| 2.2 | ☐ B-0199-01 | ☐ B-0199-21 | ☐ B-0199-06 | ☐ B-0199-21-VRF |

**Optional Handles**

☐ 4" Wrist Action
☐ Lever (Standard)
☐ 4-Arm

**Optional Cartridges**

☐ Quarter-Turn Cerama w/ Check Valves (Standard)
☐ Quarter-Turn Eterna w/ Spring Checks

**T&S BRASS AND BRONZE WORKS, INC.**
• 2 Saddleback Cove • Travelers Rest, SC 29690
Ph 800-476-4103 • Fax 864-834-3518
• Simi Valley, CA • Ph 800-423-0150 • www.tsbrass.com

Date: 07/17/18

ADVANCE TABCO
SMART FABRICATION™

*STAINLESS STEEL*

# FABRICATED FLOOR MOP SINKS

**ITEM # 370B**

Item #: 370B Qty #: _____
Model #: 9-OP-48-DF
Project #: _____



**Standard Mop Sink**
9-OP-20 Shown



**Drop Front Mop Sink**
9-OP-40DF Shown

## FEATURES:

Floor mounted unit eliminates the need of lifting heavy containers.
Tile edge furnished on the rear.
Bowls rectangular in design for increased capacity.
**K-16** 3-1/2" Free Flow Drain. Connects to a 2" drain pipe.
**-DF models** feature a notched out front which allows for ease of emptying mop bucket).

## CONSTRUCTION:

All TIG welded.
Welded areas blended to match adjacent surfaces and to a satin finish.

## MATERIAL:

16 Gauge type "304" series stainless steel sink bowl & Apron.



Notched Out Front Allows Ease of Emptying Mop Bucket

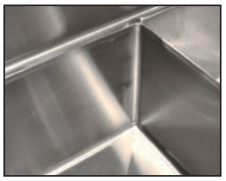

Fabricated Bowls are Welded Together at the Seams

* NSF Compliant

| | Model # | Bowl Size (A x B x C) | O.A. Dimension (W x L x H) | Drain Distance (E) | Drain Distance (F) | Approx. Wt. | Approx. Cu. |
|---|---|---|---|---|---|---|---|
| STANDARD | 9-OP-20* | 16" x 20" x 6" | 21" x 25" x 10" | 10-1/2" | 12-1/2" | 33 lbs. | 4 |
| | 9-OP-28* | 20" x 28" x 6" | 25" x 33" x 10" | 12-1/2" | 16-1/2" | 47 lbs. | 7 |
| | 9-OP-40* | 16" x 20" x 12" | 21" x 25" x 16" | 10-1/2" | 12-1/2" | 45 lbs. | 6 |
| | 9-OP-48* | 20" x 28" x 12" | 25" x 33" x 16" | 12-1/2" | 16-1/2" | 62 lbs. | 9 |
| LARGE BOWL | 9-OP-44 | 24" x 24" x 12" | 29" x 29" x 16" | 14-1/2" | 14-1/2" | 70 lbs. | 9 |
| | 9-OP-33 | 24" x 36" x 12" | 29" x 41" x 16" | 14-1/2" | 20-1/2" | 80 lbs. | 12 |
| | 9-OP-34 | 24" x 48" x 12" | 29" x 53" x 16" | 14-1/2" | 26-1/2" | 90 lbs. | 15 |
| DROP FRONT | 9-OP-40DF | 16" x 20" x 12" | 18-1/2" x 25" x 16" | 10-1/2" | 12-1/2" | 85 lbs. | 9 |
| | 9-OP-48DF | 20" x 28" x 12" | 22-1/2" x 33" x 16" | 12-1/2" | 16-1/2" | 110 lbs. | 15 |

## MOP SINK ACCESSORIES

### 16" High Side & Back Splashes for 9-OP Series Mop Sinks

**Splashes on All 3 Sides**

| Model # | Fits Units: | Model # | Fits Units: |
|---|---|---|---|
| K-298 | 9-OP-20<br>9-OP-40 | K-298D | 9-OP-40DF |
| K-299 | 9-OP-28<br>9-OP-48 | K-299D | 9-OP-48DF |
| K-300 | 9-OP-44 | - | - |

**Splash on Left or Right & Back**

| Model # | Fits Units: | Model # | Fits Units: |
|---|---|---|---|
| K-288LorR | 9-OP-20<br>9-OP-40 | K-288LDorRD | 9-OP-40DF |
| K-290LorR | 9-OP-28<br>9-OP-48 | K-290LDorRD | 9-OP-48DF |
| K-291LorR | 9-OP-44 | - | - |

**Height Above Finished Floor (A.F.F.)**
9-OP-20/9-OP-28 = 26" High 9-OP-40/9-OP-40DF/9-OP-44/9-OP-48/ 9-OP-48DF = 32" High



Left & Right Splashes Shown

**K-16** Replacement drain for floor mop sinks
**K-240** Service Faucet*
**K-242** 23" wide mop hanger
**K-243** Stainless steel mop drainage tray
**K-244** Hose and hanger
**K-245** 8" x 24" utility shelf
**K-246** 8" x 36" utility shelf

*Does not meet Federal Lead Free Standards as it is not intended for potable water.



K-243



K-240



K-245



K-242



K-16



K-244


ADVANCE TABCO
SMART FABRICATION™
www.advancetabco.com

**Customer Service Available To Assist You 1-800-645-3166 8:30 am - 7:00 pm E.S.T.**

**For Orders & Customer Service:**
**Email:** customer@advancetabco.com or **Fax:** 631-242-6900

**For Smart Fabrication™ Quotes:**
**Email:** smartfab@advancetabco.com or **Fax:** 631-586-2933

# DIMENSIONS and SPECIFICATIONS

TOL Overall: ± .500”
Interior: ± .250”

ALL DIMENSIONS ARE TYPICAL

## STANDARD MOP SINK

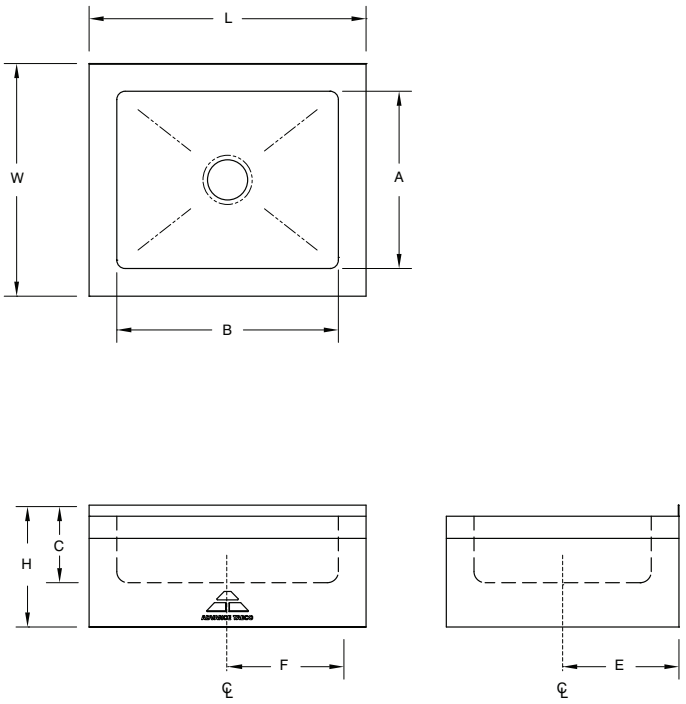


## DROP FRONT MOP SINK

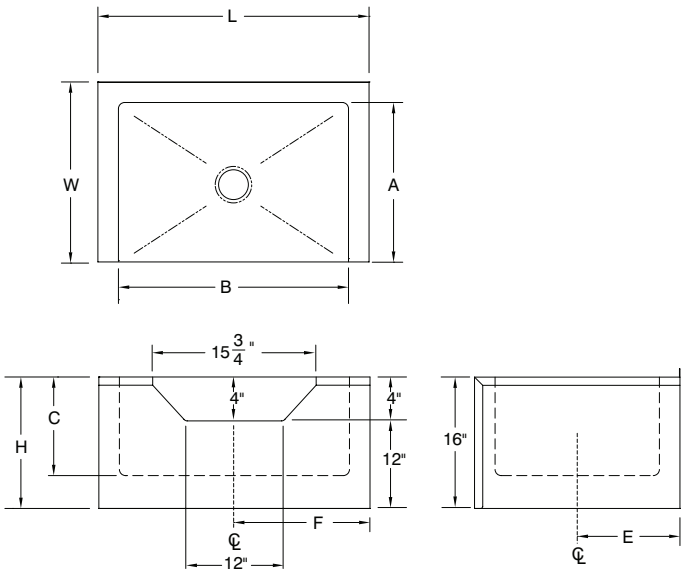


## SUGGESTED INSTALLATION

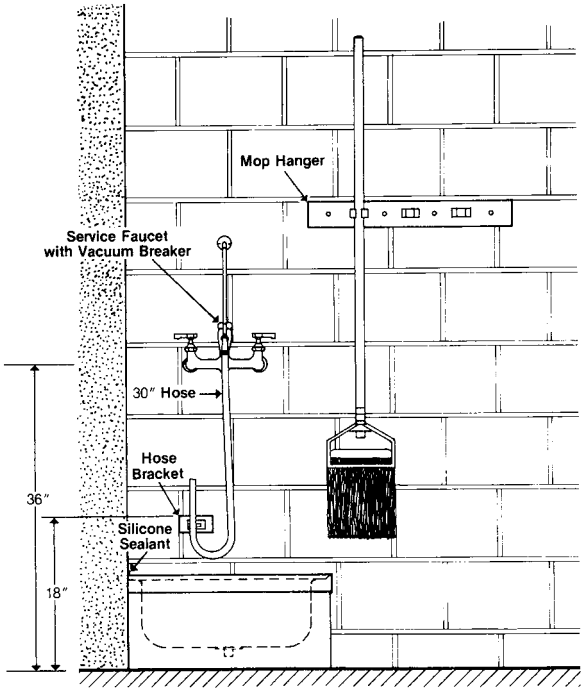


## MOP SINK DRAIN ASSEMBLY

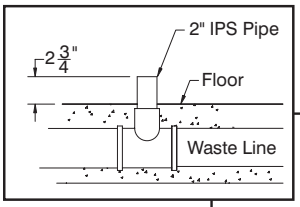


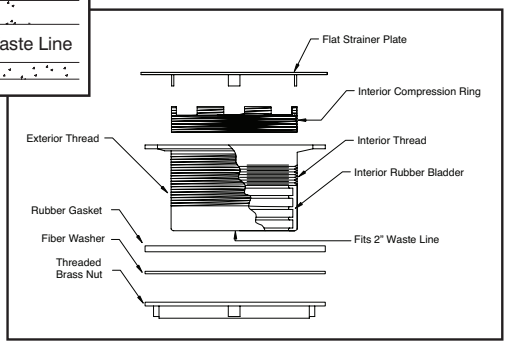


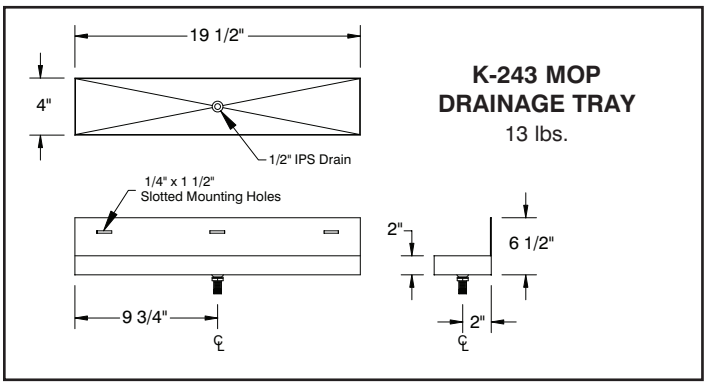


**K-243 MOP DRAINAGE TRAY**
13 lbs.

ADVANCE TABCO
SMART FABRICATION™

ADVANCE TABCO is constantly engaged in a program of improving our products. Therefore, we reserve the right to change specifications without prior notice.



325 Wireless Boulevard, Hauppauge, NY 11788

© ADVANCE TABCO, OCTOBER 2020

NSF

A LARGER REPRODUCTION OF THIS SHEET IS AVAILABLE BY REQUEST

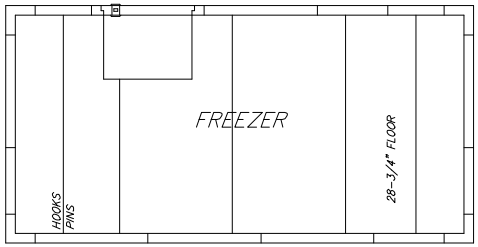


— FLOOR PANEL LAYOUT —

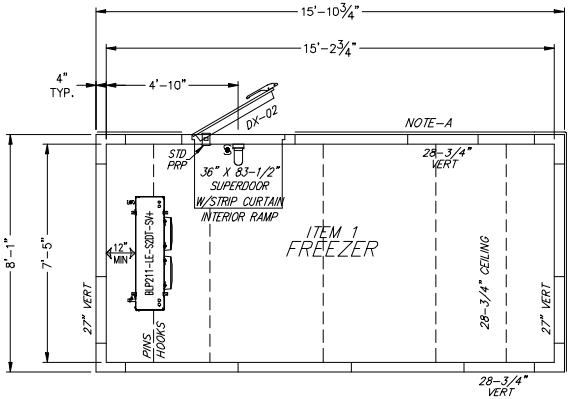


— VERTICAL & CEILING PANEL LAYOUT —

— PLAN VIEW B —

SCALE: 1/2" = 1' - 0"

## SPECIFICATIONS

15'-10 3/4" X 8'-1" X 8'-6"

### INSTALLATION

- INDOOR
- LOADING HEIGHT - AT LEAST 18" OF OPEN SPACE MUST BE MAINTAINED BETWEEN TOP OF PRODUCT AND CEILING PANELS

### INSULATION

- POURED IN-PLACE POLYURETHANE FOAM
- BALLY PANELS AND DOORS ARE CERTIFIED COMPLIANT WITH CURRENT FEDERAL DOE REGULATIONS FOR WALK IN COOLERS & FREEZERS
- BALLY PANELS AND DOORS EXCEED MINIMUM R-VALUES* FOR COOLERS (MINIMUM R-25, EXCLUDING FLOORS), AND FREEZERS (MIN. R-32, EXCEPT FLOORS, WHICH ARE MIN. R-28). *WHEN TESTED PER ASTM C518 TO FEDERAL REG. 431.304

### EXTERIOR FINISH

- EMBOSSED GALVALUME

### INTERIOR FINISH

- EMBOSSED WHITE GALVANIZED

### FLOOR FINISH

- (INTERIOR) 1/8" ALUMINUM DT W/ 3/4" PLYWOOD UNDERLAY
- (EXTERIOR) EMBOSSED GALVALUME

### DOORS/ACCESSORIES

- (1) 36" X 83-1/2" RIGHT SWING HINGED WALK-IN DOOR
  - SUPERDOOR: 3RD HINGE, DT INT & EXT 36"H
  - PRP
  - STRIP CURTAIN
  - INTERIOR RAMP

### REFRIGERATION - BY BALLY (CONDENSING UNIT MOUNTED OUTDOORS)

| QTY | H/P | REF TYPE | MODEL NUMBER | POWER SUPPLY | COMPRESSOR RLA | COMPRESSOR LRA | FAN MTRS QTY | FAN MTRS HP | FAN MTRS FLA | TOTAL WATTS DEFROST | AMPS | MCA | MAX FUSE | CMPT |
|---|---|---|---|---|---|---|---|---|---|---|---|---|---|---|
| 1 | 3.0 | R404A | BLP2010-LE-HT-SDDT | 208-230/3/60 | 8.91 | 77 | 1 | | 1.1 | | 11 | 13.5 | 20 | F |
| 1 | | | BLP211LE-SDDT-SI4 | 208-230/1/60 | | | 2 | 1/15 | 0.8 | 1890 | 8.2 | 10.3 | 15 | F |

- ALL CONDENSATION DRAIN LINES MUST BE SLOPED AT LEAST 1/12, i.e. 1" per 12" INSTALLATION
- FREEZER CONDENSATION DRAIN LINES MUST BE HEATED, INSULATED AND TRAPPED INDIVIDUALLY. BY OTHERS
- ALL SPECIFICATIONS LISTED ABOVE ARE FOR INDIVIDUAL UNITS ONLY

NOTE

SMARTVAP+ REFRIGERATION REQUIRES TWO SEPARATE POWER SOURCES; ONE TO THE CONDENSING UNIT AND ONE TO THE SMARTVAP+ EVAPORATOR.

### GENERAL NOTES

- NOTE A: BALLY TO FURNISH 1/8" ALUMINUM DIAMOND TREAD 48"H WAINSCOT TO COVER EXPOSED EXTERIOR AS SHOWN.
- NOTE: BALLY TO FURNISH (4) KEIL 48" L.E.D. LIGHTS. LIGHTS SHIPPED LOOSE AND MOUNTED AND WIRED BY OTHERS. (LIGHT SWITCH (12) AMPS MAX).
- NOTE: BALLY TO FURNISH CLOSURE GM TRIM. PLEASE ADVISE SIZE AND QUANTITY. ALL FASTENERS AND INSTALLATION BY OTHERS.
- NOTE: BALLY TO FURNISH REMOVABLE GM CLOSURE PANELS. PLEASE ADVISE SIZE AND QUANTITY. ALL FASTENERS AND INSTALLATION BY OTHERS.

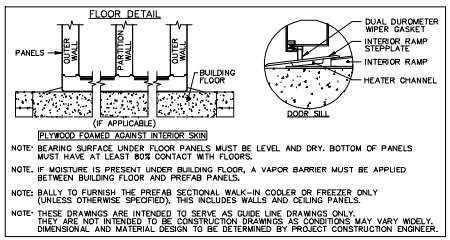


NOTE: BEARING SURFACE UNDER FLOOR PANELS MUST BE LEVEL AND DRY. BOTTOM OF PANELS MUST HAVE AT LEAST 80% CONTACT WITH FLOORS.

NOTE: IF MOISTURE IS PRESENT UNDER BUILDING FLOOR, A VAPOR BARRIER MUST BE APPLIED BETWEEN BUILDING FLOOR AND PREFAB PANELS.

NOTE: BALLY TO FURNISH THE PREFAB SECTIONAL WALK-IN COOLER OR FREEZER ONLY (UNLESS OTHERWISE SPECIFIED). THIS INCLUDES WALLS AND CEILING PANELS.

NOTE: THESE DRAWINGS ARE INTENDED TO SERVE AS GUIDE LINE DRAWINGS ONLY. THEY ARE NOT INTENDED TO BE CONSTRUCTION DRAWINGS AS CONDITIONS MAY VARY WIDELY. DIMENSIONAL AND MATERIAL DESIGN TO BE DETERMINED BY PROJECT CONSTRUCTION ENGINEER.

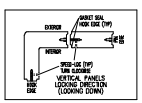


BALLY FLOOR PANEL GUIDELINES

AIR CAP./CIRCULATION RECOMMENDATION

E - ELECTRICAL CONNECTOR

THIS DRAWING IS TO BE USED FOR "APPROVAL ONLY".

-> DO NOT USE THIS DRAWING FOR INSTALLATION!

EVERY SHIPPED ORDER WILL HAVE A FINALIZED "AS-BUILT" DRAWING.

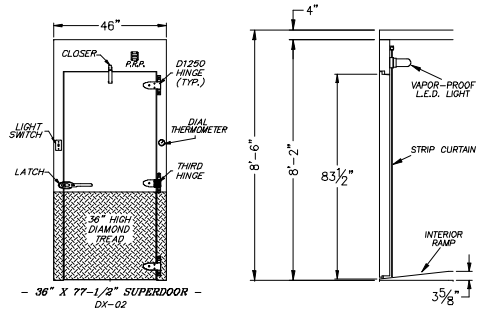


— 36" X 77-1/2" SUPERDOOR —
DX-02

— SECTION VIEW —
THRU ENTRANCE DOOR

SCALE: 1/2" = 1' - 0"

RESTRICTED, CONFIDENTIAL DOCUMENT.

THIS DRAWING AND ALL INFORMATION SHOWN HEREON ARE THE EXCLUSIVE PROPERTY OF BALLY REFRIGERATED BOXES INC., AND ARE SUBMITTED ONLY ON A CONFIDENTIAL BASIS. THE RECIPIENT AGREES NOT TO REPRODUCE THE DRAWING, TO RETURN IT UPON REQUEST, AND THAT NO DISCLOSURE OF THE DRAWING OR THE INFORMATION SHOWN HEREON WILL BE MADE TO A THIRD PARTY WITHOUT PRIOR WRITTEN CONSENT FROM BALLY REFRIGERATED BOXES INC.

SIGNED APPROVAL

SIGNED _____

DATE _____

PLEASE READ

THIS DRAWING HAS BEEN CAREFULLY CHECKED BY OUR DRAFTING DEPARTMENT. HOWEVER, ERRORS OF INTERPRETATION CAN OCCUR. PERUSE BEFORE YOU RETURN DRAWING MARKED "APPROVED", BE CERTAIN THAT YOU CHECK THEM CAREFULLY.

NOTE - THIS ORDER WILL NOT BE SCHEDULED FOR PRODUCTION UNTIL RECEIPT OF APPROVED DRAWINGS BY BALLY.

IMPORTANT - PLEASE READ

THESE DRAWINGS ARE NOT TO BE CONSIDERED AS APPROVED BY LOCAL OR STATE BUILDING AUTHORITIES.

THEY HAVE BEEN PREPARED SOLELY FOR THE GUIDANCE OF REGISTERED ARCHITECTS AND ENGINEERS AND FOR THE ASSISTANCE OF LOCAL INSTALLERS. IT IS THE RESPONSIBILITY OF THE PROJECT ARCHITECT OR ENGINEER TO ASSURE THE BUILDING DESIGN MEETS LOCAL CODE REQUIREMENTS. ANY DEVIATIONS FROM STANDARD DESIGNS AS SHOWN, AS APPROVED BY THE GENERAL CONTRACTOR, FOR THE SUCCESSFUL COMPLETION OR USAGE OF THE STRUCTURE DESCRIBED.

THE DRAWINGS AND SPECIFICATIONS DESCRIBE A BUILDING ASSEMBLED FROM BALLY PANELS INSULATED WITH URETHANE FOAMED-IN-PLACE. THE SIZE AND SHAPE IS THAT WHICH MOST CLEARLY MEETS DIMENSIONS SUBMITTED BY THE USER.

BALLY REFRIGERATED BOXES, INC. PROVIDES PANELS FREQUENTLY SPECIFIED BY OTHERS AND IS NOT RESPONSIBLE FOR THE SELECTION OR RECOMMENDATION BY OTHERS OF THE PANEL FINISH FOR ANY BUILDING OR WALK-IN APPLICATION.

| REV | DESCRIPTION | BY | DATE |
|---|---|---|---|
| | | | |

BALLY REFRIGERATED BOXES INC.

BALLY (PA) OFFICE: 126 LUTZ LAKE DRIVE, LEXINGTON, SC 29073 PHONE: (803) 951-3566 FAX: (803) 951-3569

BALLY (PA) OFFICE: 10 NORTH POST ST., SUITE 10 SPOKANE, WA 99201 PHONE: (509) 838-3566 FAX: (509) 838-3569

FOR

ALABAMA A&M FOOD COURT

FREEZER

DRAWING NUMBER: 21054BD

DRAWN BY: RCB

LAYD BY | DATE LAID | CHK'D BY

ITEM # 410 410A 410B

NSF

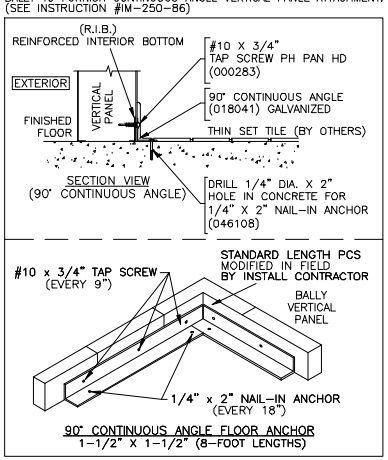


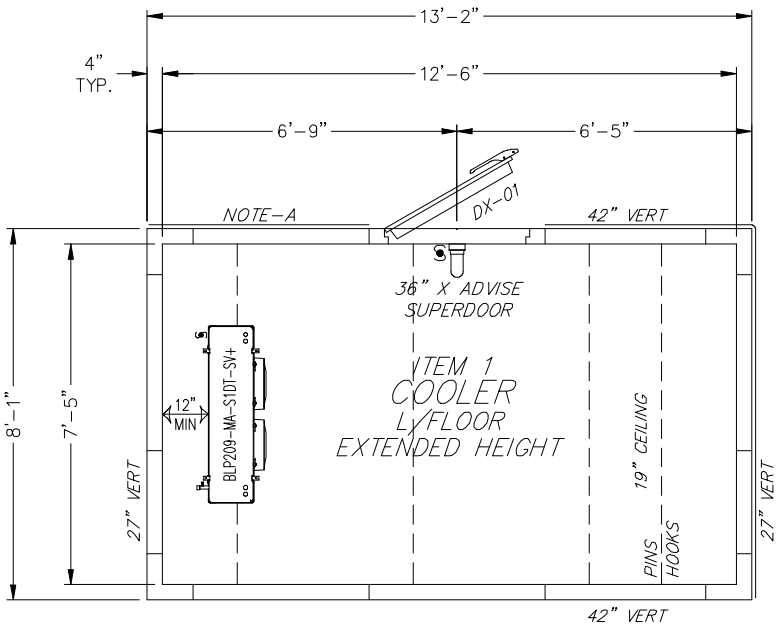


— PLAN VIEW A —

SCALE: 1/2" = 1' - 0"

# SPECIFICATIONS

13'-2" X 8'-1" X 8'-6"
(L/FLOOR, EXTENDED HEIGHT)

## INSTALLATION

- INDOOR
- LOADING HEIGHT – AT LEAST 18" OF OPEN SPACE MUST BE MAINTAINED BETWEEN TOP OF PRODUCT AND CEILING PANELS

## INSULATION

- POURED IN-PLACE POLYURETHANE FOAM
- BALLY PANELS AND DOORS ARE CERTIFIED COMPLIANT WITH CURRENT FEDERAL DOE REGULATIONS FOR WALK IN COOLERS & FREEZERS
- BALLY PANELS AND DOORS EXCEED MINIMUM R-VALUES* FOR COOLERS (MINIMUM R-25, EXCLUDING FLOORS), AND FREEZERS (MIN. R-32, EXCEPT FLOORS, WHICH ARE MIN. R-28)
  *WHEN TESTED PER ASTM C518 TO FEDERAL REG. 431.304

## EXTERIOR FINISH

- EMBOSSED GALVALUME

## INTERIOR FINISH

- EMBOSSED WHITE GALVANIZED

## DOORS/ACCESSORIES

- (1) 36" X ADVISE RIGHT SWING HINGED WALK-IN DOOR
  - SUPERDOOR: 3RD HINGE, DT INT & EXT 36"H

## REFRIGERATION – BY BALLY (CONDENSING UNIT MOUNTED OUTDOORS)

| QTY | H/P | RFGT TYPE | MODEL NUMBER | POWER SUPPLY | COMPRESSOR FLA | COMPRESSOR LRA | FAN MTRS QTY | FAN MTRS HP | FAN MTRS FLA | TOTAL WATTS DEFROST | AMPS | MCA | MAX FUSE | CMPT |
|---|---|---|---|---|---|---|---|---|---|---|---|---|---|---|
| 1 | 0.8 | R404A | BEZA008-H8-HT3DB | 208-230/3/60 | 5.2 | 37.8 | 1 | | 1.0 | | 6.2 | 7.5 | 15 | C |
| 1 | | | BLP209MA-S1DT-SV+ | 115/1/60 | | | 2 | 1/15 | 1.0 | | 2.0 | 2.3 | 15 | C |

- ALL CONDENSATION DRAIN LINES MUST BE SLOPED AT LEAST 1:12. 1" / 12" INSTALLATION
- FREEZER CONDENSATION DRAIN LINES MUST BE HEATED, INSULATED AND TRAPPED INDIVIDUALLY. BY OTHERS
- ALL SPECIFICATIONS LISTED ABOVE ARE FOR INDIVIDUAL UNITS ONLY.

NOTE

SMARTVAP+ REFRIGERATION REQUIRES TWO SEPARATE POWER SOURCES; ONE TO THE CONDENSING UNIT AND ONE TO THE SMARTVAP+ EVAPORATOR.

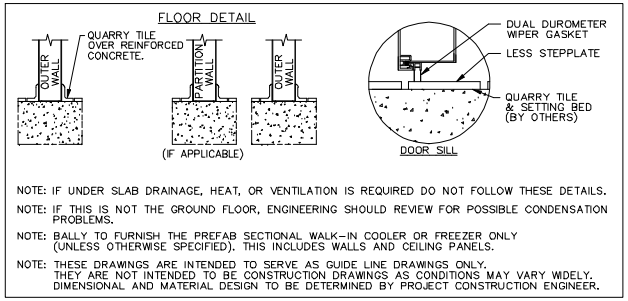


NOTE: IF UNDER SLAB DRAINAGE, HEAT, OR VENTILATION IS REQUIRED DO NOT FOLLOW THESE DETAILS.

NOTE: IF THIS IS NOT THE GROUND FLOOR, ENGINEERING SHOULD REVIEW FOR POSSIBLE CONDENSATION PROBLEMS.

NOTE: BALLY TO FURNISH THE PREFAB SECTIONAL WALK-IN COOLER OR FREEZER ONLY (UNLESS OTHERWISE SPECIFIED). THIS INCLUDES WALLS AND CEILING PANELS.

NOTE: THESE DRAWINGS ARE INTENDED TO SERVE AS GUIDE LINE DRAWINGS ONLY. THEY ARE NOT INTENDED TO BE CONSTRUCTION DRAWINGS AS CONDITIONS MAY VARY WIDELY. DIMENSIONAL AND MATERIAL DESIGN TO BE DETERMINED BY PROJECT CONSTRUCTION ENGINEER.

## GENERAL NOTES

- NOTE A: BALLY TO FURNISH 1/8" ALUMINUM DIAMOND TREAD 36"H WAINSCOT TO COVER EXTERIOR EXPOSED AS SHOWN.
- NOTE: BALLY TO FURNISH (3) KEIL 48" L.E.D. LIGHTS. LIGHTS SHIPPED LOOSE AND MOUNTED AND WIRED BY OTHERS. (LIGHT SWITCH (12) AMPS MAX).
- NOTE: BALLY TO FURNISH GM CLOSURE TRIM. PLEASE ADVISE SIZE AND QUANTITY. ALL FASTENERS AND INSTALLATION BY OTHERS.
- NOTE: BALLY TO FURNISH REMOVABLE GM CLOSURE PANELS. PLEASE ADVISE SIZE AND QUANTITY. ALL FASTENERS AND INSTALLATION BY OTHERS.

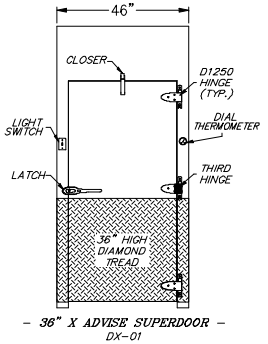


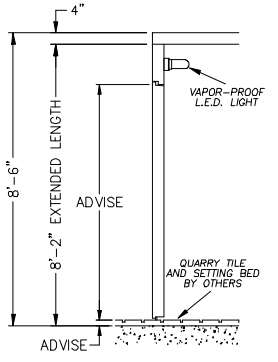


— SECTION VIEW —
THRU ENTRANCE DOOR

SCALE: 3/8" = 1' - 0"



A LARGER REPRODUCTION OF THIS SHEET IS AVAILABLE BY REQUEST

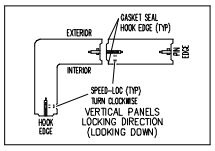


AIR GAP/CIRCULATION RECOMMENDATION
BALLY RECOMMENDS A 2" GAP BETWEEN WALK-IN VERTICAL PANELS AND EXISTING BUILDING WALLS FOR PROPER AIR CIRCULATION. IT IS ALSO RECOMMENDED THAT AIR EXCHANGE/CIRCULATION BE PROVIDED FOR WALK-INS THAT ARE WITHIN AN ENCLOSED AREA.

S – ELECTRICAL CONNECTION

THIS DRAWING IS TO BE USED FOR "APPROVAL ONLY".

-> DO NOT USE THIS DRAWING FOR INSTALLATION!

EVERY SHIPPED ORDER WILL HAVE A FINALIZED "AS-BUILT" DRAWING.

RESTRICTED, CONFIDENTIAL DOCUMENT.

THIS DRAWING AND ALL INFORMATION SHOWN HEREON ARE THE EXCLUSIVE PROPERTY OF BALLY REFRIGERATED BOXES INC. ARE SUBMITTED ONLY ON A CONFIDENTIAL BASIS. THE RECIPIENT AGREES NOT TO REPRODUCE THE DRAWING, TO RETURN IT UPON REQUEST, AND THAT NO DISCLOSURE OF THE DRAWING OR THE INFORMATION SHOWN HEREON WILL BE MADE TO A THIRD PARTY WITHOUT PRIOR WRITTEN CONSENT FROM BALLY REFRIGERATED BOXES INC.

SIGNED APPROVAL

SIGNED _____

DATE _____

PLEASE READ

THIS DRAWING HAS BEEN CAREFULLY CHECKED BY OUR DRAFTING DEPARTMENT. HOWEVER, ERRORS OF INTERPRETATION CAN OCCUR. THEREFORE, BEFORE YOU RETURN DRAWING MARKED "APPROVED", BE CERTAIN THAT YOU CHECK THEM CAREFULLY.

NOTE – THIS ORDER WILL NOT BE SCHEDULED FOR PRODUCTION UNTIL RECEIPT OF APPROVED DRAWINGS BY BALLY.

IMPORTANT – PLEASE READ

THESE DRAWINGS ARE NOT TO BE CONSIDERED AS APPROVED BY LOCAL OR STATE BUILDING AUTHORITIES.

THEY HAVE BEEN PREPARED SOLELY FOR THE GUIDANCE OF REGISTERED ARCHITECTS AND ENGINEERS AND FOR THE ASSISTANCE OF LOCAL INSTALLERS. IT IS THE RESPONSIBILITY OF THE PROJECT ARCHITECT OR ENGINEER TO ASSURE THE BUILDING DESIGN MEETS LOCAL CODE REQUIREMENTS. THIS INCLUDES STRUCTURAL DESIGN AS WELL AS ANY WORK PERFORMED BY THE GENERAL CONTRACTOR. BALLY REFRIGERATED BOXES INC. IN PREPARING THESE DRAWINGS AND SPECIFICATIONS, DOES NOT ASSUME ANY RESPONSIBILITY FOR THE SUCCESSFUL COMPLETION OR USAGE OF THE STRUCTURE DESCRIBED.

THE DRAWINGS AND SPECIFICATIONS DESCRIBE A BUILDING ASSEMBLED FROM BALLY PANELS INSULATED WITH URETHANE "FOAMED-IN-PLACE". THE SIZE AND SHAPE IS THAT WHICH MOST CLEARLY MEETS DIMENSIONS SUBMITTED BY THE USER.

BALLY REFRIGERATED BOXES INC., PROVIDES PANELS FREQUENTLY SPECIFIED BY OTHERS, AND IS NOT RESPONSIBLE FOR THE SELECTION OR RECOMMENDATION BY OTHERS OF THE PANEL FINISH FOR ANY BUILDING OR WALK-IN APPLICATION.

| REV | DESCRIPTION | BY | DATE |
|---|---|---|---|
| | | | |
| | | | |
| | | | |

Bally REFRIGERATED BOXES INC.

BALLY (NC OFFICE)
135 LITTLE NINE DRIVE
MORHEAD CITY, NC 28557
PHONE: (252) 240-2829
FAX: (252) 240-0384

BALLY (PA OFFICE)
20 NORTH FRONT ST. (SUITE B)
BALLY, PA 19503
PHONE: (610) 702-2210
FAX: (610) 702-2211

FOR ALABAMA A&M FOOD

COOLER

| | |
|---|---|
| DRAWING NUMBER | 21054AC |
| DRAWN BY | RCB |
| LBL'D BY | |
| DATE LBL'D | |
| CHK'D BY | |
| DATE | |
| ORDER NUMBER | |

ITEM # 449 449A 449B

# LOCKERS

**ITEM # 651**

KELMAX by SPG

NSF

ITEM # 661 MODEL # 4K0090L2E QTY: ___

PROJECT: _____

OPTIONS: ☐YES _____ ☐NO _____



4K4731

## Standard Features & Benefits

- Heavy Duty steel construction – including 16-gauge doors and frames
- Durable powder coated beige finish is standard. Other colors available subject to availability and lead times
- Padlock hasps are standard on all units for locking
- Available in 12”, 15” and 18” depths
- Height includes 6” legs; also available without legs subject to availability and lead times
- Ships setup; ready to use
- ADA Decal Kit available for 3, 5, and 6 door lockers



4K0034 4K0070 4K0090



4K0068

**For SPG’s complete product menu, visit www.spgusa.com or call 877.503.4SPG (4774)**

EXPECT MORE

SPG

STORAGE PRODUCTS GROUP

# LOCKERS

## SPECIFICATIONS

*BODY:*

16-gauge steel door and frame, rear legs, lock clips, 20 gauge top, bottom, shelves, back, filler, and slope top components. 24-gauge sides.

*HINGES:*

- Latches are ADA compliant
- Padlock hasp standard on all units for locking
- Single and double tier are standard with double ceiling hook and two side hooks
- Single tier units have hat shelf 12" from top
- 16 door units include 4' hanger bar

*LEGS:*

All units standard with 6" legs; also available without legs.

| | 1 Unit | | | 1 Unit Options | | |
|---|---|---|---|---|---|---|
| Model No. | Description | D x W x H | Wt. (lbs.) | Slope Top | Enclosed Base | Enclosed Base & Slope Top |
| One Door | | | | | | |
| 4K0006 | EL/1/15 | 15 x 12 x 78 | 55 | 4K0006S | 4K0006E | 4K0006ES |
| 4K0009 | EL/1/18 | 18 x 12 x 78 | 30 | 4K0009S | 4K0009E | 4K0009ES |
| Two Door | | | | | | |
| 4K0028 | EL/2 | 12 x 12 x 78 | 52 | 4K0028S | 4K0028E | 4K0028ES |
| 4K0034 | EL/2/15 | 15 x 12 x 78 | 58 | 4K0034S | 4K0034E | 4K0034ES |
| 4K0029 | EL/2/18 | 18 x 12 x 78 | 56 | 4K0029S | 4K0029E | 4K0029ES |
| Three Door | | | | | | |
| 4K0048 | EL/3 | 12 x 12 x 78 | 57 | 4K0048S | 4K0048E | 4K0048ES |
| 4K1316 | EL/3/15 | 15 x 12 x 78 | 61 | 4K1316S | 4K1316E | 4K1316ES |
| 4K0052 | EL/3/18 | 18 x 12 x 78 | 61 | 4K0052S | 4K0052E | 4K0052ES |
| Four Door- Horizontal | | | | | | |
| 4K0068 | EL/4/15/HOR | 15 x 48 x 12 | 47 | 4K0068S | 4K0068E | 4K0068ES |
| 4K0453 | EL/4/18/HOR | 18 x 48 x 12 | 52 | 4K0453S | 4K0453E | 4K0453ES |
| Five Door | | | | | | |
| 4K0070 | EL/5 | 12 x 12 x 66 | 78 | 4K0070S | 4K0070E | 4K0070ES |
| 4K0071 | EL/5/15 | 15 x 12 x 66 | 56 | 4K0071S | 4K0071E | 4K0071ES |
| 4K0074 | EL/5/18 | 18 x 12 x 66 | 56 | 4K0074S | 4K0074E | 4K0074ES |
| Six Door | | | | | | |
| 4K0090 | EL/6 | 12 x 12 x 78 | 78 | 4K0090S | 4K0090E | 4K0090ES |
| 4K0091 | EL/6/15 | 15 x 12 x 78 | 65 | 4K0091S | 4K0091E | 4K0091ES |
| 4K0094 | EL/6/18 | 18 x 12 x 78 | 72 | 4K0094S | 4K0094E | 4K0094ES |
| Sixteen Door | | | | | | |
| 4K4731 | EL/16/15 | 15 x 72 x 78 | 195 | 4K4731S | 4K4731E | 4K4731ES |
| 4K0025 | EL/16/18 | 18 x 72 x 78 | 196 | 4K0025S | 4K0025E | 4K0025ES |

AMCO • Freestyle • ISS • Kelmax • LPI • Universal Stainless • Gillis-Jarke

SPG International, LLC
11230 Harland Drive NE
Covington, GA 30014
877-503-4SPG (4774)

www.spgusa.com

The best names in the business all have one thing in common.

EXPECT MORE
SPG
STORAGE PRODUCTS GROUP

# LOCKERS

## SPECIFICATIONS

| 2 Unit Together | | 2 Unit Options | |
|---|---|---|---|
| Model No. | Slope Top | Enclosed Base | Enclosed Base & Slope Top |
| One Door | | | |
| 4K0006L2 | 4K0006L2S | 4K0006L2E | 4K0006L2ES |
| 4K0009L2 | 4K0009L2S | 4K0009L2E | 4K0009L2ES |
| Two Door | | | |
| 4K0028L2 | 4K0028L2S | 4K0028L2E | 4K0028L2ES |
| 4K0034L2 | 4K0034L2S | 4K0034L2E | 4K0034L2ES |
| 4K0029L2 | 4K0029L2S | 4K0029L2E | 4K0029L2ES |
| Three Door | | | |
| 4K0048L2 | 4K0048L2S | 4K0048L2E | 4K0048L2ES |
| 4K1316L2 | 4K1316L2S | 4K1316L2E | 4K1316L2ES |
| 4K0052L2 | 4K0052L2S | 4K0052L2E | 4K0052L2ES |
| Five Door | | | |
| 4K0070L2 | 4K0070L2S | 4K0070L2E | 4K0070L2ES |
| 4K0071L2 | 4K0071L2S | 4K0071L2E | 4K0071L2ES |
| 4K0074L2 | 4K0074L2S | 4K0074L2E | 4K0074L2ES |
| Six Door | | | |
| 4K0090L2 | 4K0090L2S | 4K0090L2E | 4K0090L2ES |
| 4K0091L2 | 4K0091L2S | 4K0091L2E | 4K0091L2ES |
| 4K0094L2 | 4K0094L2S | 4K0094L2E | 4K0094L2ES |

| 3 Unit Together | | 3 Unit Options | |
|---|---|---|---|
| Model No. | Slope Top | Enclosed Base | Enclosed Base & Slope Top |
| One Door | | | |
| 4K0006L3 | 4K0006L3S | 4K0006L3E | 4K0006L3ES |
| 4K0009L3 | 4K0009L3S | 4K0009L3E | 4K0009L3ES |
| Two Door | | | |
| 4K0028L3 | 4K0028L3S | 4K0028L3E | 4K0028L3ES |
| 4K0034L3 | 4K0034L3S | 4K0034L3E | 4K0034L3ES |
| 4K0029L3 | 4K0029L3S | 4K0029L3E | 4K0029L3ES |
| Three Door | | | |
| 4K0048L3 | 4K0048L3S | 4K0048L3E | 4K0048L3ES |
| 4K1316L3 | 4K1316L3S | 4K1316L3E | 4K1316L3ES |
| 4K0052L3 | 4K0052L3S | 4K0052L3E | 4K0052L3ES |
| Five Door | | | |
| 4K0070L3 | 4K0070L3S | 4K0070L3E | 4K0070L3ES |
| 4K0071L3 | 4K0071L3S | 4K0071L3E | 4K0071L3ES |
| 4K0074L3 | 4K0074L3S | 4K0074L3E | 4K0074L3ES |
| Six Door | | | |
| 4K0090L3 | 4K0090L3S | 4K0090L3E | 4K0090L3ES |
| 4K0091L3 | 4K0091L3S | 4K0091L3E | 4K0091L3ES |
| 4K0094L3 | 4K0094L3S | 4K0094L3E | 4K0094L3ES |

AMCO • Freestyle • ISS • Kelmax • LPI • Universal Stainless • Gillis-Jarke

SPG International, LLC
11230 Harland Drive NE
Covington, GA 30014
877-503-4SPG (4774)

www.spgusa.com

The best names in the business
all have one thing in common.

EXPECT MORE
SPG
STORAGE PRODUCTS GROUP

ITEM # 661

ADVANCE TABCO
SMART FABRICATION™

*STAINLESS STEEL*

# FABRICATED FLOOR MOP SINKS

Item #: 661 Qty #: _____

Model #: K-242

Project #: _____



**Standard Mop Sink**
9-OP-20 Shown



**Drop Front Mop Sink**
9-OP-40DF Shown

## FEATURES:

Floor mounted unit eliminates the need of lifting heavy containers.

Tile edge furnished on the rear.

Bowls rectangular in design for increased capacity.

**K-16** 3-1/2" Free Flow Drain. Connects to a 2" drain pipe.

**-DF models** feature a notched out front which allows for ease of emptying mop bucket).

## CONSTRUCTION:

All TIG welded.

Welded areas blended to match adjacent surfaces and to a satin finish.

## MATERIAL:

16 Gauge type "304" series stainless steel sink bowl & Apron.



Notched Out Front Allows Ease of Emptying Mop Bucket

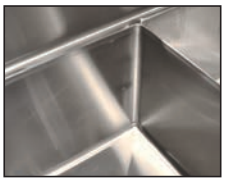

Fabricated Bowls are Welded Together at the Seams

| | Model # | Bowl Size (A x B x C) | O.A. Dimension (W x L x H) | Drain Distance (E) | Drain Distance (F) | Approx. Wt. | Approx. Cu. |
|---|---|---|---|---|---|---|---|
| STANDARD | 9-OP-20 | 16" x 20" x 6" | 21" x 25" x 10" | 10-1/2" | 12-1/2" | 33 lbs. | 4 |
| | 9-OP-28 | 20" x 28" x 6" | 25" x 33" x 10" | 12-1/2" | 16-1/2" | 47 lbs. | 7 |
| | 9-OP-40 | 16" x 20" x 12" | 21" x 25" x 16" | 10-1/2" | 12-1/2" | 45 lbs. | 6 |
| | 9-OP-48 | 20" x 28" x 12" | 25" x 33" x 16" | 12-1/2" | 16-1/2" | 62 lbs. | 9 |
| LARGE BOWL | 9-OP-44 | 24" x 24" x 12" | 29" x 29" x 16" | 14-1/2" | 14-1/2" | 70 lbs. | 9 |
| DROP FRONT | 9-OP-40DF | 16" x 20" x 12" | 18-1/2" x 25" x 16" | 10-1/2" | 12-1/2" | 85 lbs. | 9 |
| | 9-OP-48DF | 20" x 28" x 12" | 22-1/2" x 33" x 16" | 12-1/2" | 16-1/2" | 110 lbs. | 15 |

## MOP SINK ACCESSORIES

### 16" High Side & Back Splashes for 9-OP Series Mop Sinks

**Splashes on All 3 Sides**

| Model # | Fits Units: | Model # | Fits Units: |
|---|---|---|---|
| K-298 | 9-OP-20<br>9-OP-40 | K-298D | 9-OP-40DF |
| K-299 | 9-OP-28<br>9-OP-48 | K-299D | 9-OP-48DF |
| K-300 | 9-OP-44 | - | - |

**Splash on Left or Right & Back**

| Model # | Fits Units: | Model # | Fits Units: |
|---|---|---|---|
| K-288LorR | 9-OP-20<br>9-OP-40 | K-288LDorRD | 9-OP-40DF |
| K-290LorR | 9-OP-28<br>9-OP-48 | K-290LDorRD | 9-OP-48DF |
| K-291LorR | 9-OP-44 | - | - |

**Height Above Finished Floor (A.F.F.)**
9-OP-20/9-OP-28 = 26" High 9-OP-40/9-OP-40DF/9-OP-44/9-OP-48/ 9-OP-48DF = 32" High



Left & Right Splashes Shown

**K-16** Replacement drain for floor mop sinks
**K-240** Service Faucet*
**K-242** 23" wide mop hanger
**K-243** Stainless steel mop drainage tray
**K-244** Hose and hanger
**K-245** 8" x 24" utility shelf
**K-246** 8" x 36" utility shelf

*Does not meet Federal Lead Free Standards as it is not intended for potable water.



K-243



K-240



K-245



K-242



K-16



K-244


ADVANCE TABCO
SMART FABRICATION™
www.advancetabco.com

**Customer Service Available To Assist You 1-800-645-3166 8:30 am - 7:00 pm E.S.T.**

**For Orders & Customer Service:**
**Email:** customer@advancetabco.com or **Fax:** 631-242-6900

**For Smart Fabrication™ Quotes:**
**Email:** smartfab@advancetabco.com or **Fax:** 631-586-2933

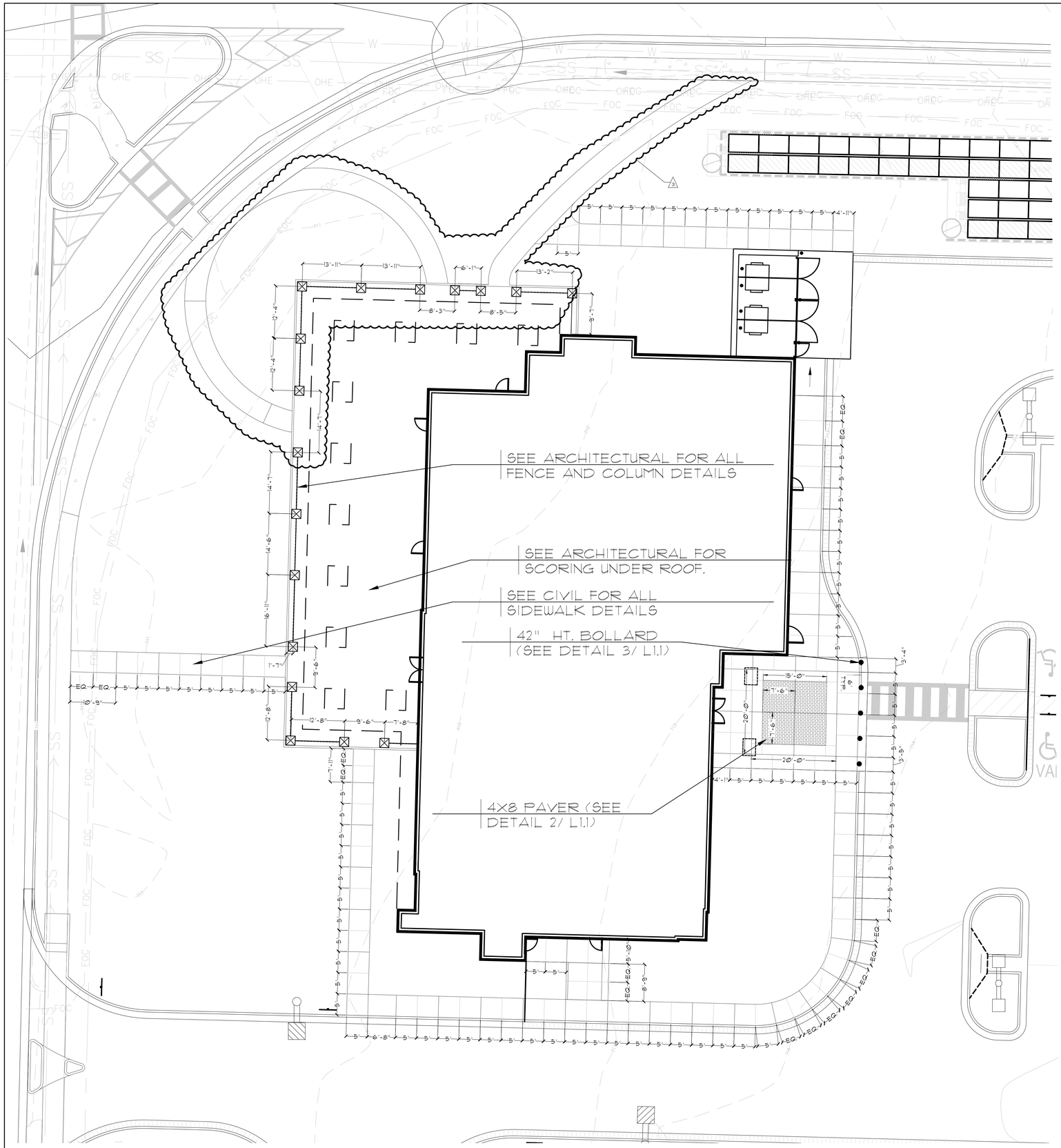


1 / L-1.1 Hardscape Scoring Plan

1"=20'

NOTE: SLOPE OF PAVERS TO MATCH ELEVATIONS ON CIVIL PLANS PROVIDE POSITIVE DRAINAGE

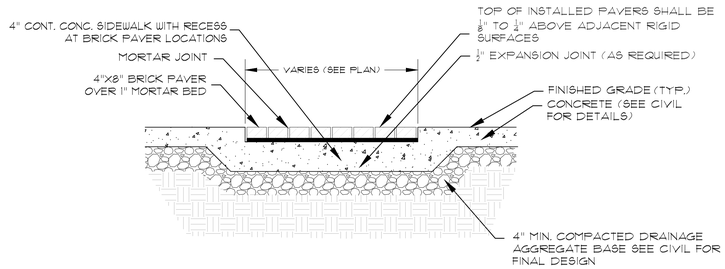


2 / L-1.1 Paver Detail

n.t.s.

BEGA 42" BOLLARD, NON-LIT
(NON-LIT HEAD) 42" BOLLARD WITH 360 DEGREE DITRIBUTION.
COLOR/FINISH TO BE SELECTED
BY OWNER/ARCHITECT, DRIVE-THROUGH PROTECTION.

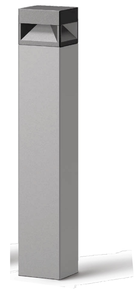

Bollard heads : **Light emission 360°**

| | LED | A | B |
|---|---|---|---|
| **84 690** | 16.8 W | 6 ¼ | 4 ¼ |
| **84 691** | 25.2 W | 8 ¼ | 7 ½ |

3 / L-1.1 42" HT BOLLARD

n.t.s.

## HARDSCAPE LAYOUT NOTES:

1. (P.O.B.) POINT OF BEGINNING AT CORNER AS SHOWN.
2. ALL ANGLES ARE 90 DEGREES UNLESS OTHERWISE NOTED ON PLAN.
3. ALL HARDSCAPE ELEMENTS ARE TO BE STAKED IN THE FIELD BY THE CONTRACTOR FOR APPROVAL BY THE LANDSCAPE ARCHITECT BEFORE BEGINNING CONSTRUCTION ALLOW 48 HR. NOTICE. UNAPPROVED ELEMENTS ARE SUBJECT TO REMOVAL AT CONTRACTORS EXPENSE.
4. ALL RADII GIVEN ARE TO EDGE OF PAVEMENT UNLESS OTHERWISE
5. REFER TO THE CIVIL PLANS FOR ALL SPOT ELEVATIONS, GRADES, AND CONCRETE DETAILS AND CONCRETE SPECIFICATIONS.
6. ALL SCORE JOINTS ARE TO BE HAND TROWELED AND NOT SAWCUT

0 10 20 40
SCALE IN FEET NORTH

BOSTICK LANDSCAPE ARCHITECTS

STATE OF ALABAMA
DAVID
BOSTICK
NUMBER
689
LANDSCAPE ARCHITECT

NOLA VANPEURSEM
ARCHITECTS, PC
MEMBERS OF THE AMERICAN INSTITUTE OF ARCHITECTS
301 JEFFERSON STREET
HUNTSVILLE, ALABAMA 35801
(256) 533-6617
NVPARCHITECTS.COM

THIS DRAWING MAY NOT BE REPRODUCED IN WHOLE OR IN PART WITHOUT THE CONSENT OF NOLA|VANPEURSEM ARCHITECTS

ALABAMA A&M UNIVERSITY

# WELCOME CENTER

4900 MERIDIAN ST.
HUNTSVILLE, ALABAMA

JOB NUMBER
18994

KSU / CDB / 01/25/2021
DRAWN - CHECKED - DATE

REVISIONS

| No. | Description | Date |
|---|---|---|
| 3 | ADDENDUM #3 | 03/17/2021 |

SHEET TITLE
**HARDSCAPE PLAN**

SHEET NUMBER
L-1.1
OF

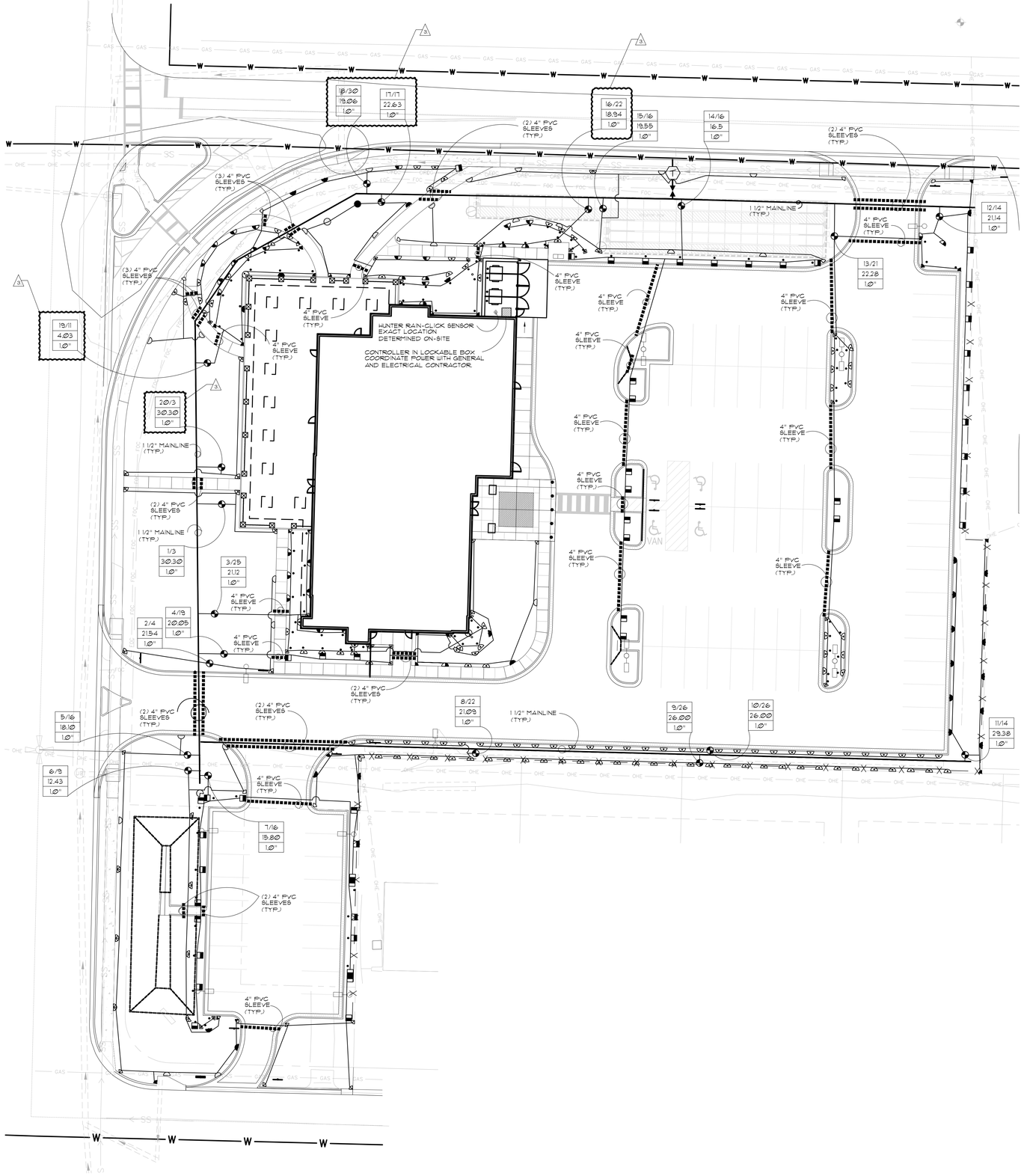


## IRRIGATION DESIGN DATA

| CIRCUIT | HEADS | GPM. | TOTAL GPM | VALVE | TYPE HEAD |
|---|---|---|---|---|---|
| 1 | 3 | 30.30 | 35 | 100-PEB | HUNTER I-25 ROTOR |
| 2 | 4 | 21.54 | 35 | 100-PEB | HUNTER PRS40 PRO-SPRAY HEADS AND I-25 ROTOR |
| 3 | 25 | 21.12 | 35 | 100-PEB | HUNTER PRS40 PRO-SPRAY HEADS |
| 4 | 19 | 20.05 | 35 | 100-PEB | HUNTER PRS40 PRO-SPRAY HEADS |
| 5 | 16 | 18.10 | 35 | 100-PEB | HUNTER PRS40 PRO-SPRAY HEADS |
| 6 | 9 | 12.43 | 35 | 100-PEB | HUNTER PRS40 PRO-SPRAY HEADS |
| 7 | 16 | 19.86 | 35 | 100-PEB | HUNTER PRS40 PRO-SPRAY HEADS |
| 8 | 22 | 21.03 | 35 | 100-PEB | HUNTER PRS40 PRO-SPRAY HEADS |
| 9 | 26 | 26.00 | 35 | 100-PEB | HUNTER PRS40 PRO-SPRAY HEADS |
| 10 | 26 | 26.00 | 35 | 100-PEB | HUNTER PRS40 PRO-SPRAY HEADS |
| 11 | 14 | 26.00 | 35 | 100-PEB | HUNTER PRS40 PRO-SPRAY HEADS |
| 12 | 14 | 21.14 | 35 | 100-PEB | HUNTER PRS40 PRO-SPRAY HEADS |
| 13 | 21 | 22.28 | 35 | 100-PEB | HUNTER PRS40 PRO-SPRAY HEADS |
| 14 | 16 | 16.50 | 35 | 100-PEB | HUNTER PRS40 PRO-SPRAY HEADS |
| 15 | 16 | 19.55 | 35 | 100-PEB | HUNTER PRS40 PRO-SPRAY HEADS |
| 16 | 22 | 18.94 | 35 | 100-PEB | HUNTER PRS40 PRO-SPRAY HEADS |
| 17 | 17 | 22.63 | 35 | 100-PEB | HUNTER PRS40 PRO-SPRAY HEADS |
| 18 | 30 | 19.06 | 35 | 100-PEB | HUNTER PRS40 PRO-SPRAY HEADS |
| 19 | 11 | 3.49 | 35 | 100-PEB | HUNTER PRS40 PRO-SPRAY HEADS AND I-25 ROTOR |
| 20 | 3 | 30.30 | 35 | 100-PEB | HUNTER I-25 ROTOR |

## PROVIDE THE FOLLOWING PIPE SIZES / FLOW RATES

| PIPE SIZE | | | |
|---|---|---|---|
| 1" | 11 GPM | 2-1/2" | 80 GPM |
| 1-1/2" | 35 GPM | 3" | 125 GPM |
| 2" | 55 GPM | 4" | 200 GPM |

FLOW RATES FOR PVC PIPE AT MAXIMUM 5 FT/ SEC.

## IRRIGATION LEGEND

- HUNTER I-25 ROTOR WITH #10 LT GREEN NOZZLE SERIES ROTOR HEADS, 360-90° ARCS
- HUNTER PGP ROTOR WITH #4 BLUE NOZZLE SERIES ROTOR HEADS, 360-90° ARCS
- HUNTER PROS-PRS40-CV-MP3000 SERIES SPRAY HEADS, 360-90° ARCS
- HUNTER PROS-PRS40-CV-MP1000 SERIES SPRAY HEADS, 360-90° ARCS
- HUNTER PROS-PRS40-CV-MP1000 SERIES SPRAY HEADS, 360-90° ARCS
- HUNTER PROS-PRS40-CV-MP1000 SERIES SPRAY HEADS, 360-90° ARCS
- HUNTER PRS40-CV-MP1000 SERIES SPRAY HEADS, 360-90° ARCS
- HUNTER PRS40-CV-MPLCS15/MP8530 SERIES SPRAY HEADS, END & SIDE STRIPS
- RAINBIRD SQ-HLF NOZZLE ON 12" HIGH POP
- INDICATES (12") TWELVE INCH HIGH POP
- RAINBIRD PEB SERIES VALVES ELECTRIC REMOTE CONTROL VALVE, SIZE AS PER DRAWINGS INCLUDE AT EACH VALVE 1 EZ-1 DECODER
- HUNTER HQ-44-LRC- QUANTITY OF (4) FOUR EXACT LOCATION TO BE DETERMINED ONSITE
- BRASS BALL VALVE IN MAINLINE, DANFOSS AMIA CS15 LOCKABLE SIZE PER LINE
- 1" METER, BACKFLOW AND MASTER VALVE INCLUDING 1 EZ-1 DECODER TO BE INSTALLED BY HUNTSVILLE UTILITIES
- HUNTER IRRIGATION ICC-600-PL WITH EZ-DM DECODER MODEL ELECTROMECHANICAL CONTROLLER IN LOCKABLE BOX .
- HUNTER INDUSTRIES RAIN CLIK EXACT LOCATION DETERMINED ON-SITE BY LANDSCAPE ARCHITECT
- 1.5" MAINLINE SCH40 PVC, SIZE AS PER DRAWING
- LATERAL LINE CLASS 200 PVC SIZE AS PER DRAWING
- SLEEVING CLASS 200 PVC BY GENERAL WORKS CONTRACTOR SIZE AS PER DRAWING. COORDINATE WITH GENERAL WORKS CONTRACTOR
- TOP LINE # INDICATES CONTROLLER CIRCUIT NUMBER / # HEADS
- MIDDLE LINE # IS CALCULATED FLOW IN GALLONS/MINUTE
- BOTTOM LINE # INDICATES SIZE OF VALVE REQUIRED

NOTE: GROUNDING TO BE INSTALLED EVERY 300' OF TWO WIRE PATH LENGTH, OR EVERY TEN VALVES, WHICHEVER IS SHORTER. GROUNDING TO BE INSTALLED AT THE END OF THE WIRE RUN REGARDLESS OF LENGTH.

## NOTES

1. POWER TO CONTROLLER BY ELECTRICAL CONTRACTOR. EXACT LOCATION OF CONTROLLER ON-SITE BY LANDSCAPE ARCHITECT.
2. COORDINATE POWER TO CONTROLLER WITH GENERAL AND ELECTRICAL CONTRACTOR.
3. DRAWING IS DIAGRAMMATIC. ALL LINES TO BE PLACED BACK OF CURB OR SIDEWALK.
4. ALL HEADS PLACED IN SHRUB BEDS WILL HAVE 12" POP-UPS UNLESS OTHERWISE NOTED
5. USE VARIABLE ARC SPRAY HEADS WHEN NECESSARY
6. THERE IS TO BE (2) 4" PVC SLEEVES EACH TIME MAINLINE CROSSES HARDSCAPE THERE IS TO BE (1) 4" PVC SLEEVE WHEN THE LATERAL LINE CROSSES HARDSCAPE
7. ALL EQUIPMENT REQUIRED BUT NOT SPECIFIED ON THE DRAWINGS SHALL BE PROVIDED BY THE CONTRACTOR.
8. VERIFY METER: IRRIGATION CONTRACTOR TO TEST WATER CONDITIONS AS THEY EXIST IMMEDIATELY DOWN STREAM FROM METER. IF THEY DO NOT MEET DESIGN DEMANDS, NOTIFY LANDSCAPE ARCHITECT IMMEDIATELY OF EXISTING CONDITIONS.
9. MATCH PRECIPITATION RATES ON ALL CIRCUITS.
10. ALL WORK MUST COMPLY WITH LOCAL CODES.
11. NO ELECTRICAL CONNECTIONS SHALL BE MADE IN THE FIELD EXCEPT AT A VALVE CONTROL BOX OR ANOTHER VALVE BOX SPECIFICALLY FOR CONNECTIONS
12. ANY DISCREPANCY BETWEEN THIS SHEET AND OTHERS IN THIS SET MUST BE REFERRED TO THE IRRIGATION CONSULTANT BY THE CONTRACTOR FOR CLARIFICATION BEFORE PROCEEDING WITH THE WORK.
13. ALL 24 VOLT WIRE SHALL BE #12 U.F.U.L FOR COMMON WIRE, AND #14 U.F.U.L. FOR CONTROL WIRES, DIRECT BURIAL SOLID COPPER.
14. CONTRACTOR TO BE RESPONSIBLE FOR PROPER COVERAGE OF AREAS TO BE WATERED. I.E. ADJUST HEADS WITH INSUFFICENT COVERAGE DUE TO BLOCKAGE BY EXISTING OR PROPOSED SITE FEATURES
15. CONTRACTOR TO REFER TO LANDSCAPE PLAN TO KEEP SPRINKLER EQUIPMENT AND ACCESSORY MATERIAL FROM INTERFERING WITH PROPER PLANTING. I.E. VERIFY ROOTBALL SIZE FOR PLANTING.
16. CONTRACTOR SHALL PROVIDE EXPANSION COILS AT EACH WIRE CONNECTION IN VALVE BOX (WRAP AROUND 3/4" PIPE 12 TIMES).
17. CONTRACTOR TO UTILIZE APPROPRIATE AUTOMATIC DRAIN DEVICE WHERE LOW HEAD DRAINAGE MAY OCCUR.
18. ALL MATERIAL TO BE SUPPLIED BY CONTRACTOR TO OWNER:
    A. TWO WRENCHES FOR DISASSEMBLING AND ADJUSTING EACH TYPE OF SPRINKLER HEADS AND VALVE SUPPLIED.
    B. TWO KEYS FOR EACH OF THE AUTOMATIC CONTROLLERS.
    C. TWO QUICK COUPLER KEYS WITH MATCHING HOSE SWIVELS.
19. 24 VOLT WIRE SHALL BE COLOR CODED: COMMON-WHITE, CONTROL-RED
20. ELECTRIC VALVE CONTROL WIRE TO BE 14 GAUGE MINIMUM. IRRIGATION CONTRACTOR MUST PLACE ONE EXTRA "HOT" WIRE AND ONE EXTRA "COMMON" AT FURTHEST VALVE IN EACH DIRECTION FROM CLOCK.
21. ALL MAIN LINES SHALL BE INSTALLED A MAXIMUM OF 2' FROM THE BACK OF CURBS WHERE POSSIBLE. LATERAL LINES SHALL BE INSTALLED LIKEWISE WHERE POSSIBLE.
22. ACTUAL HEAD PLACEMENT IN PARKING LOT ISLANDS IS TO BE 18" FROM BACK OF CURB FOR SHRUB PLANTINGS AND 6" FROM BACK OF CURB FOR LAWNS.
23. THE CONTRACTOR SHALL ADJUST THE RADIUS AND ARC OF EACH HEAD TO MINIMIZE "OVERTHROW" AND TO ELIMINATE "DRY SPOTS".
24. THE CONTRACTOR SHALL BE RESPONSIBLE FOR THE SUPPLY AND INSTALLATION OF ADDITIONAL HEADS NEEDED TO COVER "DRY SPOTS" OR SLIGHT VARIATIONS FROM THE PLAN TO THE SITE UP TO FIVE % OF SPECIFIED HEAD TYPE. THE LOCATION AND ARRANGEMENT OF THESE HEADS SHALL BE SUBJECT TO THE APPROVAL OF THE LANDSCAPE ARCHITECT.
25. DO NOT MAKE SUBSTITUTIONS. IF CONTRACTOR DESIRES TO MAKE SUBSTITUTIONS OF MATERIALS1 SUFFICIENT DESCRIPTIVE LITERATURE AND MATERIAL SAMPLES MUST BE FURNISHED TO ESTABLISH THE MATERIAL AS AN EQUAL SUBSTITUTE. IN ADDITION, THE CONTRACTOR MUST STATE HIS REASONS FOR DESIRING SUBSTITUTE MATERIALS. SUBMIT THIS REQUEST AND INFORMATION TO LANDSCAPE ARCHITECT.
26. SLEEVES SHOWN ON THESE PLANS FOR LOCATIONS AND SIZES OF MAINLINE AND LATERAL LINES. ALL SLEEVES TO BE IN PLACE UNDER SITEWORKS CONTRACTOR. IRRIGATION CONTRACTOR TO VERIFY ALL LOCATIONS. REPORT DISCREPANCIES TO LANDSCAPE ARCHITECT IMMEDIATELY FOR INSTALLED LOCATIONS. IRRIGATION CONTRACTOR TO REFERENCE SLEEVING "AS-BUILT" AS WELL.
27. IRRIGATION CONTRACTOR TO REVIEW FINAL GRADING PLAN FOR FINISHED GRADE CHANGES AND POTENTIAL PROBLEMS. NOTIFY LANDSCAPE ARCHITECT IMMEDIATELY.
28. ALL MAINLINE SLEEVES TO BE MARKED WITH TRACER WIRE. SEE SPECIFICATIONS FOR MATERIALS.
29. ALL SLEEVES TO BE INSTALLED AS PART OF THE BASE BID.

0 10 20 40
SCALE IN FEET NORTH

BOSTICK LANDSCAPE ARCHITECTS

STATE OF ALABAMA
DAVID C. BOSTICK
NUMBER 680
3.17.21
REGISTERED LANDSCAPE ARCHITECT


NOLA VANPEURSEM ARCHITECTS, PC
MEMBERS OF THE AMERICAN INSTITUTE OF ARCHITECTS
301 JEFFERSON STREET
HUNTSVILLE, ALABAMA 35801
(256) 533-6617
NVPARCHITECTS.COM



THIS DRAWING MAY NOT BE REPRODUCED IN WHOLE OR IN PART WITHOUT THE CONSENT OF NOLA|VANPEURSEM ARCHITECTS


ALABAMA A&M UNIVERSITY

# WELCOME CENTER

4900 MERIDIAN ST.
HUNTSVILLE, ALABAMA

JOB NUMBER
18994

KSU / CDB / 01/25/2021
DRAWN - CHECKED - DATE

REVISIONS

| No. | Description | Date |
|---|---|---|
| 3 | ADDENDUM #3 | 03/17/2021 |

SHEET TITLE
**IRRIGATION PLAN**

SHEET NUMBER
L-2.1
OF

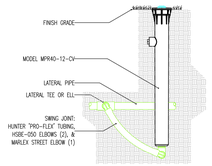


1 SHRUB MP ROTATOR SPRINKLER DETAIL

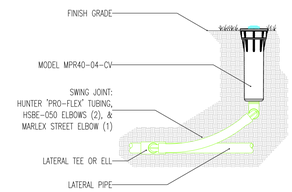


2 LAWN MP ROTATOR SPRINKLER DETAIL

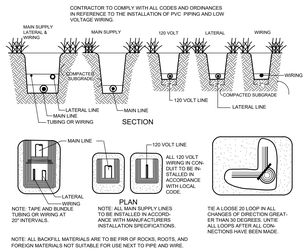


3 TRENCHING DETAIL

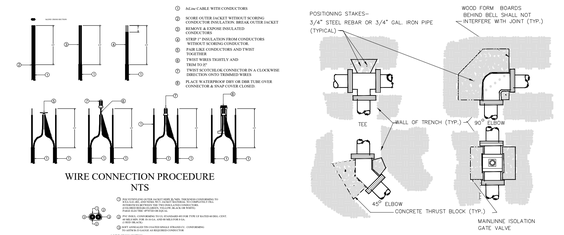


4 BiLine WIRING DETAILS




5 CONCRETE THRUST BLOCK DETAIL

**MINIMUM THRUST SUPPORT AREA**

SOIL TYPE – SOFT CLAY

| PIPE SIZE | 90° ELBOW | 45° ELBOW | VALVES, TEES DEAD ENDS |
|---|---|---|---|
| 3" | 4 SF | 2.4 SF | 3.2 SF |
| 4" | 7.1 SF | 4.4 SF | 5.7 SF |
| 6" | 16 SF | 9.2 SF | 11.6 SF |
| 8" | 28.8 SF | 16.4 SF | 20.4 SF |
| 10" | 44.8 SF | 25.2 SF | 31.6 SF |
| 12" | 64 SF | 36.4 SF | 45.2 SF |

SOIL TYPE – SAND

| PIPE SIZE | 90° ELBOW | 45° ELBOW | VALVES, TEES DEAD ENDS |
|---|---|---|---|
| 3" | 2 SF | 1.2 SF | 1.6 SF |
| 4" | 3.6 SF | 2.2 SF | 2.6 SF |
| 6" | 8 SF | 4.6 SF | 5.8 SF |
| 8" | 14.4 SF | 8.2 SF | 10.2 SF |
| 10" | 22.4 SF | 12.6 SF | 15.8 SF |
| 12" | 32 SF | 18.2 SF | 22.6 SF |

CLACULATIONS BASED WITH SOIL BEARING LOADS OF 500 LBS./SQ. FT. – SOFT CLAY; 1,000 LBS./SQ. FT. – SAND.

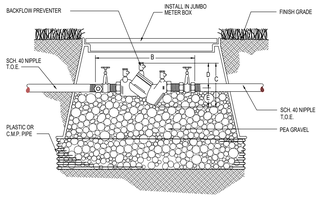


DIMENSIONS (INCHES)

| SIZE | B | C | D | E | WIDTH |
|---|---|---|---|---|---|
| 1" | 12-1/2" | 6-1/2" | 4" | 2-1/2" | 2-1/2" |
| 1" | 13-1/2" | 6-1/2" | 4-1/2" | 2-1/2" | 2-1/2" |
| 1" | 16-1/2" | 9-1/2" | 5-1/2" | 4-1/2" | 4-1/2" |
| 2" | 17-1/2" | 9-1/2" | 6-1/2" | 4-1/2" | 4-1/2" |

CONTRACTOR SHALL COMPLY WITH ALL LOCAL CODES AND ORDINANCES IN REFERENCE TO INSTALLATION AND VENTING OF BACKFLOW PREVENTION DEVICE.

6 BACKFLOW PREVENTER DETAIL

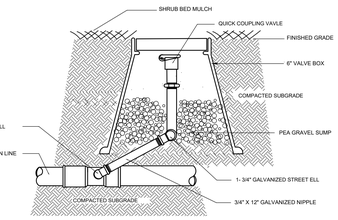


7 QUICK COUPLING VALVE DETAIL

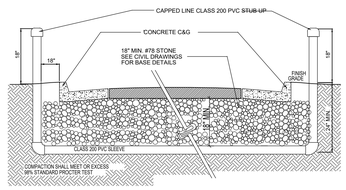


NOTE: INSTALLER OF SLEEVES SHALL BE RESPONSIBLE TO LOCATE SLEEVES IF NOT PROPERLY LOCATED.

8 ROADWAY SLEEVING DETAIL

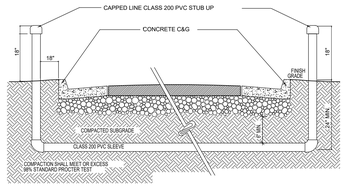


NOTE: INSTALLER OF SLEEVES SHALL BE RESPONSIBLE TO LOCATE SLEEVES IF NOT PROPERLY LOCATED.

9 WALKWAY SLEEVING DETAIL

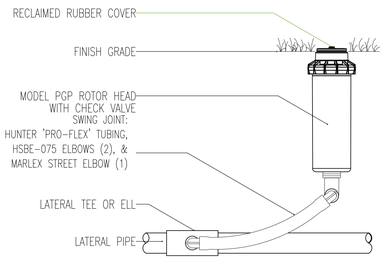


10 PGP ROTOR DETAIL

## NOTES

NOTE: EXCEPT FOR OBVIOUS CROSSINGS, PIPE IS IN PAVING OR OUTSIDE OF PROPERTY LINE FOR GRAPHIC CLARITY ONLY.

ALL WORK SHALL BE DONE WITH IN PROPERTY LINES.

ALL SLEEVES SHALL BE 4" PVC MINIMUM.

CONTRACTOR SHALL INSTALL AUTOMATIC DRAIN VALVES AT ALL LOW POINTS IN SYSTEM.

ALL HEADS IN SHRUB BEDS SHALL BE INSTALLED ON 12" RISERS.

IRRIGATION NOTES

1. THE CONTRACTOR'S ATTENTION IS CALLED TO THE FACT THAT THERE ARE OTHER ACTIVE UTILITIES AND SERVICES IN AND AROUND THE SITE. CONTRACTOR IS RESPONSIBLE FOR LOCATING THESE TO AVOID DAMAGE TO THEM.
2. THE CONTRACTOR SHALL MAKE ANY NECESSARY ADJUSTMENTS IN THE PROPOSED IRRIGATION SYSTEM TO AVOID DAMAGE TO EXISTING STRUCTURES, PAVING, AND UTILITIES.
3. THE CONTRACTOR SHALL BE RESPONSIBLE FOR ANY DAMAGE TO ON-SITE UTILITIES, STRUCTURES, OR PAVING RESULTING FROM IRRIGATION CONSTRUCTION.
4. THE CONTRACTOR SHALL BE RESPONSIBLE FOR CONFORMING TO ALL CODES AND ORDINANCES RELEVANT TO THE WORK UNDER THIS CONTRACT.
5. ALL WORK, ADJUSTMENETS, AND INSPECTIONS SHALL BE SUBJECT TO THE APPROVAL OF THE LANDSCAPE ARCHITECT.
6. THE CONTRACTOR SHALL BE RESPONSIBLE FOR ALL MATERIALS AND LABOR TO FULLY EXECUATE AND GUARANTEE, AS REQUIRED, THE TOTAL WORK SHOWN ON THIS PLAN IN ACCORDANCE WITH SPECIFICATIONS, AND ALSO AS PER INSTRUCTIONS OF THE LANDSCAPE ARCHITECT AND THE OWNER.
7. THE CONTRACTOR SHALL VERIFY ALL QUANTITIES TO ASSURE ADEQUATE INSTALLATION OF THE SYSTEM.
8. THE LOCATION OF THE AUTOMATIC CONTROL CLOCK IS GENERALLY INDICATED ON THE DRAWING AND WILL BE SPECIFICALLY LOCATED ON-SITE BY THE LANDSCAPE ARCHITECT OR OWNER.
9. LINE LOCATIONS AS INDICATED ON THE PLAN ARE SCHEMATIC. THE CONTRACTOR SHALL LOCATE ALL LINES IN SUCH A WAY AS TO CAUSE THE LEAST CONFLICT WITH THE LOCATION OF PROPOSED PLANT MATERIALS (AS SHOWN ON THE LANDSCAPE PLANTING PLAN) AND OTHER SITE AMENITIES.
10. ALL MAIN LINES SHALL BE INSTALLED A MAXIMUM OF 2' FROM THE BACK OF CURBS WHERE POSSIBLE. LATERAL LINES SHALL BE INSTALLED LIKEWISE WHERE POSSIBLE.
11. ALL MAINLINES SHALL BE INSTALLED AT A MINIMUM OF 18" DEEP AND ALL LATERAL LINES SHALL BE INSTALLED AT A MINIMUM OF 12" DEEP.
12. ACTUAL HEAD PLACEMENT IN PARKING LOT ISLANDS IS TO BE 18" FROM BACK OF CURB FOR SHRUB PLANTINGS AND 6" FROM BACK OF CURB FOR LAWNS.
13. THE CONTRACTOR SHALL ADJUST THE RADIUS AND ARC OF EACH HEAD TO MINIMIZE "OVERTHROW" AND TO ELIMINATE "DRY SPOTS".
14. THE CONTRACTOR SHALL BE RESPONSIBLE FOR THE SUPPLY AND INSTALLATION OF ADDITIONAL HEADS NEEDED TO COVER "DRY SPOTS" OR SLIGHT VARIATIONS FROM THE PLAN TO THE SITE. THE LOCATION AND ARRANGEMENT OF THESE HEADS SHALL BE SUBJECT TO THE APPROVAL OF THE LANDSCAPE ARCHITECT.
15. THE ELECTRIC SUPPLY WILL BE STUBBED OUT AT THE CONTROL CLOCK LOCATION BY OTHERS. THE IRRIGATION CONTRACTOR SHALL BE RESPONSIBLE FOR ALL ELECTRICAL CONECTIONS FROM CONTROL VALVES TO THE CONTROL CLOCK.
16. THE ENTIRE SYSTEM SHALL BE UNCONDITIONALLY GUARANTEED BY THE IRRIGATION CONTRACTOR AGAINST ALL DEFECTIVE WORK AND MATERIALS FOR A PERIOD OF ONE YEAR FOLLOWING THE DATE OF FINAL ACCEPTANCE.

SLEEVING NOTES

1. THE LOCATIONS OF SLEEVES, AS SHOWN ON THIS PLAN, ARE SCHEMATIC. THE CONTRACTOR SHALL MAKE ANY ADJUSTMENT NECESSARY TO ACCOMMODATE EXISTING VEGETATION, UTILITIES, NATURAL BARRIERS OR OTHER MAJOR CONSTRUCTION.
2. ANY DAMAGE TO EXISTING UTILITIES, STRUCTURES, OR OTHER CONSTRUCTION RESULTING FROM INSTALLATION OF SLEEVES IS THE RESPONSIBILITY OF THE CONTRACTOR.
3. WHERE A JOINT BETWEEN PIPE SECTIONS IS NECESSARY, THE INSIDE DIAMETER OF THE PIPE SHALL NOT BE SIGNIFICANTLY REDUCED.
4. P.V.C. SLEEVES SHALL BE INSTALLED AT A DEPTH OF AT LEAST 18" BELOW PAVEMENT SURFACE, AND NO DEEPER THAN 24". END OF SLEEVE SHALL EXTEND 12" BEYOND CURB OR PAVEMENT EDGE.
5. BACKFILL MATERIAL PLACED AROUND THE SLEEVES SHALL BE FREE OF ROCKS OR OTHER FOREIGN MATTER THAT MAY CAUSE DAMAGE TO THE PIPE.
6. THE CONTRACTOR SHALL INSTALL A P.V.C. STUB THAT IS AT LEAST 18" ABOVE GRADE AT EACH END OF THE SLEEVE TO MARK ITS EXACT LOCATION. IRRIGATION SLEEVES SHALL BE INDICATED WITH BLUE RIBBON. ELECTRICAL SLEEVES SHALL BE INDICATED WITH ORANGE RIBBON. SEE SLEEVING DETAIL.
7. ONCE THE SLEEVE IS INSTALLED, THE CONTRACTOR SHALL INSTALL A TEMPORARY CAP ON EACH END OF THE PIPE ACCORDING TO THE DETAIL TO PREVENT SOIL OR OTHER DEBRIS FROM ENTERING THE PIPE.
8. ALL MODIFICATIONS OF THIS PLAN ARE SUBJECT TO THE APPROVAL OF THE LANDSCAPE ARCHITECT.
9. THE CONTRACTOR SHALL SUPPLY THE LANDSCAPE ARCHITECT WITH AN "AS-BUILT" PLAN OF THE LOCATION OF ALL SLEEVES PRIOR TO ACCEPTANCE OF WORK.
10. SLEEVES ARE 4" MINIMUM SIZE AS INDICATED ON PLAN.
11. ALL SLEEVES SHALL BE CLASS 200 P.V.C. PIPE.

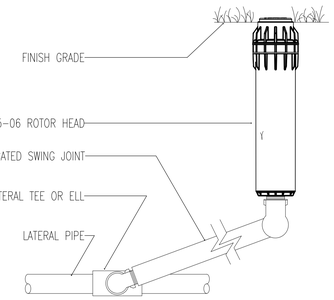


11 I-25-06 ROTOR DETAILS

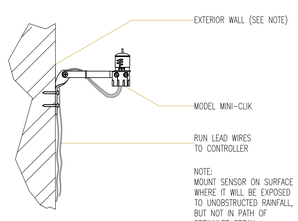


17 HUNTER MINI CLIK DETAIL

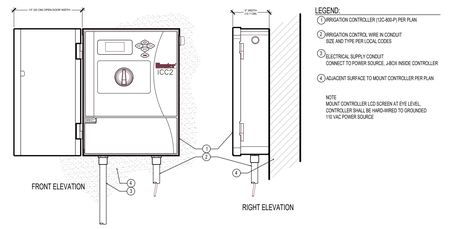


18 CONTROLLER DETAIL

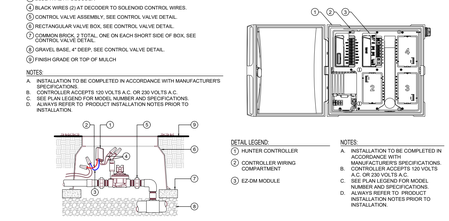


19 DECODER DETAIL

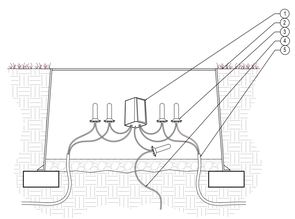


20 SURGE ARRESTOR DETAIL


BOSTICK LANDSCAPE ARCHITECTS

STATE OF ALABAMA – DAVID C. BOSTICK – NUMBER 680 – 3.17.21 – REGISTERED LANDSCAPE ARCHITECT

NOLA VANPEURSEM ARCHITECTS, PC
MEMBERS OF THE AMERICAN INSTITUTE OF ARCHITECTS
301 JEFFERSON STREET
HUNTSVILLE, ALABAMA 35801
(256) 533-6617
NVPARCHITECTS.COM



THIS DRAWING MAY NOT BE REPRODUCED IN WHOLE OR IN PART WITHOUT THE CONSENT OF NOLA|VANPEURSEM ARCHITECTS


ALABAMA A&M UNIVERSITY
**WELCOME CENTER**
4900 MERIDIAN ST.
HUNTSVILLE, ALABAMA

JOB NUMBER
18994

KSU / CDB / 01/25/2021
DRAWN - CHECKED - DATE

REVISIONS

| No. | Description | Date |
|---|---|---|
| 3 | ADDENDUM #3 | 03/17/2021 |

SHEET TITLE
**IRRIGATION DETAILS**

SHEET NUMBER
L-2.2
OF

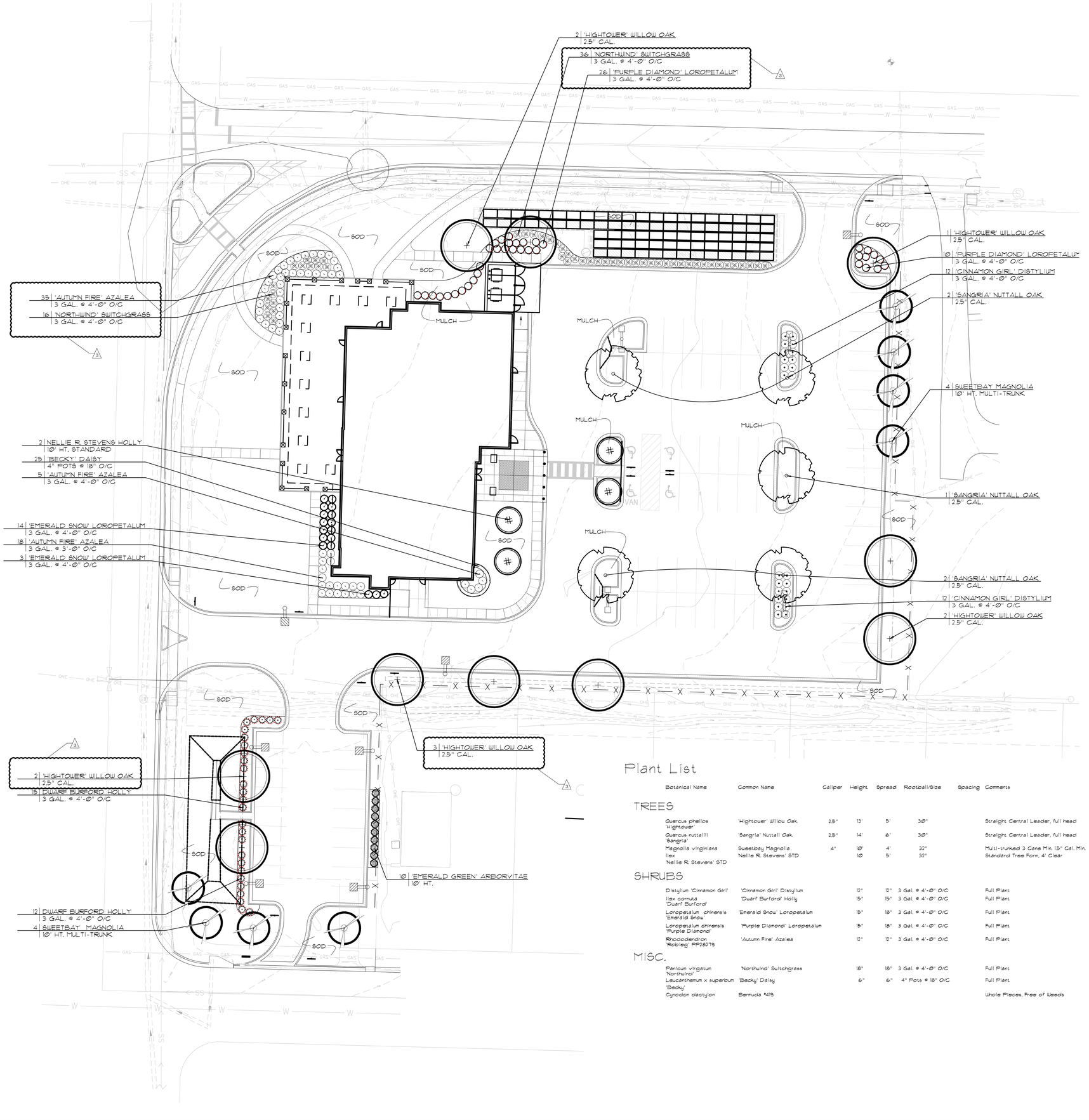


## CITY OF HUNTSVILLE OFF STREET PARKING AND VEHICLE USE AREA (PVA) LANDSCAPING REQUIREMENTS

### Perimeter Landscaping:

Trees: 1497.73 / 50 * 30

Shrubs: 1497.73 / 50 x 6 * 180

TREES
REQUIRED: 30
PROVIDED: 30

SHRUBS
REQUIRED: 180
PROVIDED: 190

### Interior Landscaping:

PVA > or = to 40 parking spaces? YES

PVA > or = to 12,000 square feet? YES

MIN. INTERIOR LANDSCAPE AREA=
Total PVA Area (49,477.08) x (.1826 + (.00435 x 63)) / 100

REQUIRED LANDSCAPE AREA: 1,039.04
PROVIDED LANDSCAPE AREA: 1,854.41

Trees: 1,039.04 / 200 * 6

Shrubs: 1,039.04 / 200 x 4 * 24

TREES
REQUIRED: 6
PROVIDED: 7

SHRUBS
REQUIRED: 24
PROVIDED: 24

EXISTING PLANT MATERIAL CREDIT:

## Plant List

| Botanical Name | Common Name | Caliper | Height | Spread | Rootball/Size | Spacing | Comments |
|---|---|---|---|---|---|---|---|
| **TREES** | | | | | | | |
| Quercus phellos 'Hightower' | 'Hightower' Willow Oak | 2.5" | 13' | 5' | 30" | | Straight Central Leader, full head |
| Quercus nuttallii 'Sangria' | 'Sangria' Nuttall Oak | 2.5" | 14' | 6' | 30" | | Straight Central Leader, full head |
| Magnolia virginiana | Sweetbay Magnolia | 4" | 10' | 4' | 32" | | Multi-trunked 3 Cane Min. 1.5" Cal. Min. |
| Ilex 'Nellie R. Stevens' STD | 'Nellie R. Stevens' STD | | 10 | 5' | 32" | | Standard Tree Form, 4' Clear |
| **SHRUBS** | | | | | | | |
| Distylium 'Cinnamon Girl' | 'Cinnamon Girl' Distylium | | 12" | 12" | 3 Gal. @ 4'-0" O/C | | Full Plant |
| Ilex cornuta 'Dwarf Burford' | 'Dwarf Burford' Holly | | 15" | 15" | 3 Gal. @ 4'-0" O/C | | Full Plant |
| Loropetalum chinensis 'Emerald Snow' | 'Emerald Snow' Loropetalum | | 15" | 18" | 3 Gal. @ 4'-0" O/C | | Full Plant |
| Loropetalum chinensis 'Purple Diamond' | 'Purple Diamond' Loropetalum | | 15" | 18" | 3 Gal. @ 4'-0" O/C | | Full Plant |
| Rhododendron 'Robleg' PPP26213 | 'Autumn Fire' Azalea | | 12" | 12" | 3 Gal. @ 4'-0" O/C | | Full Plant |
| **MISC.** | | | | | | | |
| Panicum virgatum 'Northwind' | 'Northwind' Switchgrass | | 18" | 18" | 3 Gal. @ 4'-0" O/C | | Full Plant |
| Leucanthemum x superbum 'Becky' | 'Becky' Daisy | | 6" | 6" | 4" Pots @ 18" O/C | | Full Plant |
| Cynodon dactylon | Bermuda '419 | | | | | | Whole Pieces, Free of Weeds |

NOTE: LANDSCAPE CONTRACTOR IS TO CONTACT LANDSCAPE ARCHITECT IF CONFLICT EXIST WITH SITE LIGHTING, MECHANICAL UNITS OF UTILITIES TO COORDINATE CHANGES WITH PROPOSED LANDSCAPE. IF SITE CONDITIONS EXIST SUCH AS LOW AREAS WHERE WATER MAY STAND OR OTHER CONDITIONS THAT AFFECT THE LONG TERM SURVIVAL OF NEW LANDSCAPE LANDSCAPE CONTRACTOR TO CONTACT LANDSCAPE ARCHITECT TO COORDINATE CHANGES FROM THE PLAN. IF THESE CONDITIONS ARE NOT COORDINATED DURING CONSTRUCTION, CONTRACTOR IS RESPONSIBLE FOR RELOCATING NEW MATERIAL AT DIRECTIVE OF LANDSCAPE ARCHITECT AT TIME OF PUNCHLIST.

0 10 20 40
SCALE IN FEET

NORTH

BOSTICK LANDSCAPE ARCHITECTS

STATE OF ALABAMA
DAVID BOSTICK
NUMBER 680
3.17.21
REGISTERED LANDSCAPE ARCHITECT


NOLA VANPEURSEM ARCHITECTS, PC
MEMBERS OF THE AMERICAN INSTITUTE OF ARCHITECTS
301 JEFFERSON STREET
HUNTSVILLE, ALABAMA 35801
(256) 533-6617
NVPARCHITECTS.COM



THIS DRAWING MAY NOT BE REPRODUCED IN WHOLE OR IN PART WITHOUT THE CONSENT OF NOLA|VANPEURSEM ARCHITECTS


ALABAMA A&M UNIVERSITY

# WELCOME CENTER

4900 MERIDIAN ST.
HUNTSVILLE, ALABAMA

JOB NUMBER
18994

KSU / CDB / 01/25/2021
DRAWN - CHECKED - DATE

REVISIONS

| No. | Description | Date |
|---|---|---|
| 1 | ADDENDUM #3 | 03/17/2021 |

SHEET TITLE
**LANDSCAPE PLAN**

SHEET NUMBER
L-3.1
OF

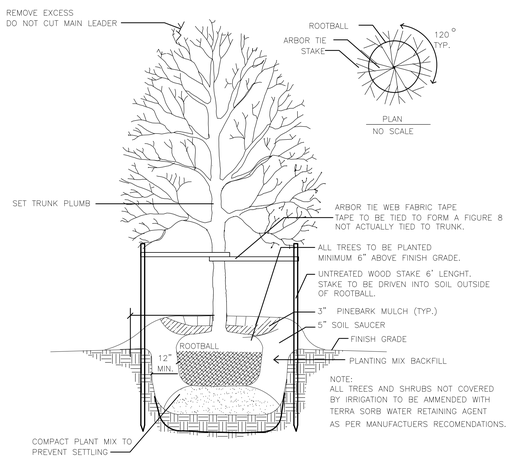


1 DETAIL TYPICAL TREE PLANTING AND GUYING
NOT TO SCALE

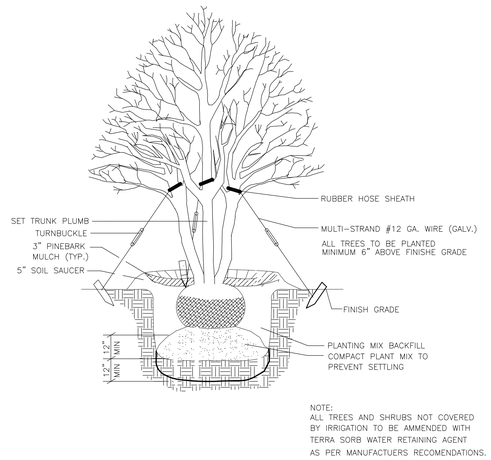


2 DETAIL MULTI-TRUNKED TREE PLANTING
NOT TO SCALE

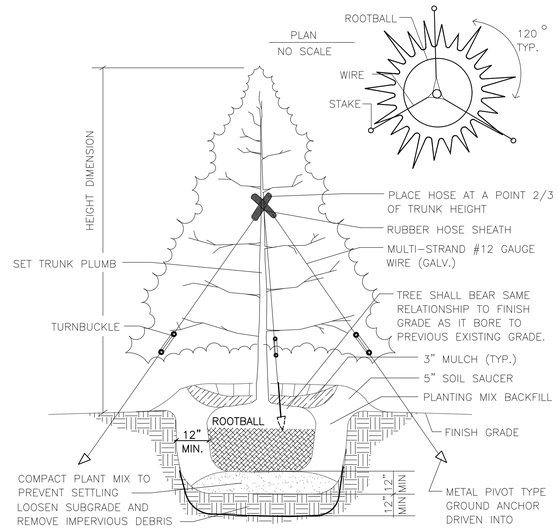


NOTES: 1. EVERGREEN TREES 2" CAL OR SMALLER TO BE STAKED.
2. PROVIDE WATER CRYSTALS PER MANUFACTURER'S RECOMMENDATIONS FOR PINE TREES.

3 DETAIL EVERGREEN TREE PLANTING
NOT TO SCALE

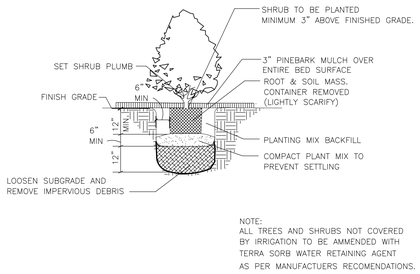


4 DETAIL TYPICAL CONTAINERIZED SHRUB PLANTING
NOT TO SCALE

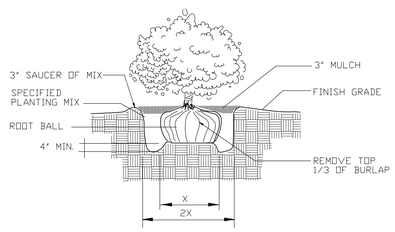


5 B&B SHRUB DETAIL
NOT TO SCALE

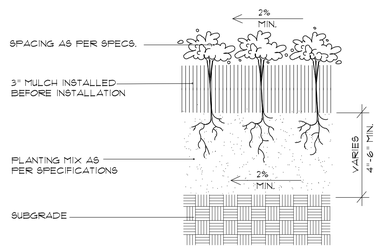


6 GROUND COVER DETAIL
NOT TO SCALE

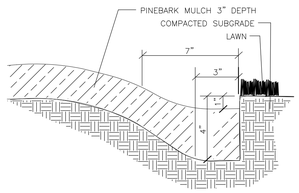


NOTE: TRENCH EDGE TO BE LOCATED BETWEEN PLANTING BEDS, AROUND TREE PITS AND ALL LAWN AREAS.

7 TRENCH EDGER DETAIL FOR ALL BEDS
NOT TO SCALE

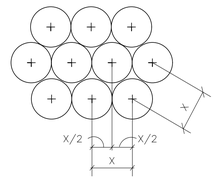


NOTES: 1. SEE PLANTING PLANS FOR SHRUB & GROUNDCOVER BED AREAS.
2. ROWS SHALL BE STRAIGHT & PARALLEL.
3. SPACING SHOWN ON PLANT SCHEDULE (X).

8 DETAIL TYPICAL STAGGERED ROW SPACING
NOT TO SCALE

# GENERAL NOTES

CONTRACTOR SHALL BE RESPONSIBLE FOR THE SITE INSPECTION PRIOR TO LANDSCAPE CONSTRUCTION AND INSTALLATION IN ORDER TO ACQUAINT HIMSELF WITH EXISTING CONDITIONS. CONTRACTOR SHALL BE RESPONSIBLE FOR LOCATING ALL EXISTING UNDERGROUND UTILITIES BEFORE BEGINNING CONSTRUCTION.

CONTRACTOR SHALL VERIFY PLANT COUNT FROM PLAN AND REPORT DIFFERENCES.

ALL TREES AND SPECIMEN PLANT MATERIAL SHALL BE LOCATED BY THE CONTRACTOR AT APPROVED NURSERIES OR THEIR EQUAL <SEE LIST> APPROVED PRIOR TO BIDDING.

ALL PLANT MATERIALS ARE SUBJECT TO APPROVAL OR REFUSAL BY THE LANDSCAPE ARCHITECT AT THE JOB SITE.

CONTRACTOR SHALL LAYOUT TREES AND BED LINES FOR REVIEW BY LANDSCAPE ARCHITECT PRIOR TO PLANTING. A MINIMUM 24 HOUR NOTICE SHOULD BE GIVEN AND ANTICIPATED BY THE CONTRACTOR FOR THIS REVIEW.

SITE CONTRACTOR TO PROVIDE 12" MIN. SETTLED DEPTH OF TOPSOIL FOR ALL PLANTING BEDS PRIOR TO INSTALLATION OF TOPSOIL, SUBSOIL IS TO BE LOOSENED TO A DEPTH OF 6"
ALL GRAVEL AND OTHER CONSTRUCTION DEBRIS IS TO BE REMOVED FROM SITE IN AREAS OUTSIDE OF 18" FROM BACK OF CURBS, EDGES OF SIDEWALKS AND BUILDING FACES

SITE CONTRACTOR TO PROVIDE 4" MIN. SETTLED DEPTH OF TOPSOIL FOR ALL AREAS TO RECEIVE SOD PRIOR TO INSTALLATION OF TOPSOIL, SUBSOIL IS TO BE LOOSENED TO A DEPTH OF 6"
ALL GRAVEL AND OTHER CONSTRUCTION DEBRIS IS TO BE REMOVED FROM SITE IN AREAS OUTSIDE OF 18" FROM BACK OF CURBS, EDGES OF SIDEWALKS AND BUILDING FACES

CONTRACTOR SHALL BE RESPONSIBLE FOR PROVIDING 3% POSITIVE DRAINAGE IN ALL PLANT AREAS.

PLANTS SHALL BE WELL FORMED, VIGOROUS, GROWING SPECIMENS WITH GROWTH TYPICAL OF VARIEITES SPECIFIED AND SHALL BE FREE FROM INJURY, INSECTS AND DISEASES. PLANTS SHALL EQUAL OR SURPASS QUALITY AS DEFINED IN THE CURRENT ISSUE OF NURSERY "AMERICAN STANDARDS FOR NURSERY STOCK" AS PUBLISHED BY THE AMERICAN NURSERYMEN, INC.

ALL PLANT MATERIAL SHALL BE BALLED AND BURLAPPED OR CONTAINER GROWN.

ALL SHRUBS, TREES AND GROUND COVERS SHALL BE PLANTED WITH A SOIL MIXTURE CONSISTING OF 50% TOPSOIL AND 50% ORGANIC MATERIAL AND PER SPECIFICATIONS.

FRONT ROW OR SHRUBS SHALL BE PLANTED MINIMUM 24" BEHIND BED LINE @ LAWNS OR WALKS AND MINIMUM 48" BACK OR CURB @ PARKING SPACES.

BACK ROW OF SHRUB PLANTING SHALL BE PLANTED @ 36" OFF FACE OF BUILDING WALL, GROUND COVERS SHALL BE 12" OUT FROM BUILDING AS REQUIRED BY PLANT SPECIFICATIONS.

EXCAVATE EDGE OF ALL PLANTING BEDS TO 4" DEPTH TO FORM A NEAT CRISP DEFINITION.

ALL PLANTING BEDS AND TREE PITS SHALL BE MULCHED WITH A 3" SETTLED LAYER OF SPECIFIED MULCH.

GRASS: ALL AREAS TO BE GRASSED SHALL BE TILLED AND GRADED TO A DEPTH OF 6". SLAG OF LIME SHALL BE APPLIED AT A RATE OF 100 POUNDS PER 1000 SQ. FT. ADD TURF GREEN OR EQUAL (12-5-8 SLOW RATE) AT A RATE OF 50 POUNDS PER 1000 SQ. FT. SEEDED AREAS SHALL BE COVERED WITH A THIN LAYER OF WHEAT STRAW.

GRADE ALL AREAS FOR APPROVAL BY LANDSCAPE ARCHITECT BEFORE SODDING.

SEASONAL COLOR SHALL BE PLANTED IN FLOWERING STATE.

CONTRACTOR SHALL GUARANTEE ALL PLANT MATERIAL, INCLUDING GRASS FOR ONE FULL YEAR FROM DATE OF SUBSTANTIAL COMPLETION.

REMOVE ALL GUY WIRES AND STAKES AT END OF GUARANTEE PERIOD.

WHEN TREES ARE PLANTED THE MONTHS OF MARCH THRU OCTOBER, THE LANDSCAPE CONTRACTOR SHALL AMEND THE SOIL MIX WITH A MOISTURE RETENTION AGENT AS 'TERRA-SORB' OR EQUAL FOR EACH TREE INSTALLATION.

The contractor is to source the trees specified on these drawings at the following nurseries or preapproved equal nurseries. Nurseries of equal quality trees must be approved prior to bidding. The Landscape Architect will consider alternate growers only if submitted with photographs of each tree, grower name, contact, address, and phone number 7 days or more prior to bid date. The Landscape Architect will tentatively accept (subject to tagging) or reject alternate growers within (3) five days of date submitted. Landscape Contractor must have written conditional acceptance fron Landscape Architect of any proposed alternate growers to submit with Bid Package, otherwise, substitutions will not be permitted. Substitutions fron the specified plant list will be accepted only when satisfactory evidence in writing is submitted to the Landscape Architect prior to submitting bid- tree list, showing that the material is not available. This list shall be submitted prior to submitting bid.

(1) Request for approval of substitute plant material shall include common, and botanical names, and the size of substitution material.
(2) Only those substitutions of at least equivalent size and having essential characteristics similar to the arigInally specified materials will be approved. The Landscape Architect will issue in acceptance or rejection of substitute plant material in writing.

The following reputable nursuries are provided to establish the minimum quality level that will be acceptable and are not intended to imply that these are the only sources for trees.

All trees will be tagged by the Landscape Architect at one of the following listed nurseries or equal contingent upon approval by the Landscape Architect prior to submitting bids. See Specification section 02900 for basis of approval.

The Landscape Contractor will be responsible for all expenses related to tagging trips to all growers including usual fees charged by the Lanskcape Architect. The Landscape Contractor shall provide the Landscape Architect a minimum of THREE WEEKS advance notice. Landscape Contractor shall limit tagging trips to no more than two at a maximum of two days each. All tagging trips will be completed within 45 days from date contract is awarded to Lanskcape Contractor.
The Landscape Contractor should anticipate accompanying the Landscape Architect on the tagging trips but is not required to do so.

Trees are not to be sourced from Warren County, Tennessee as approved equals. Tagging trips to Warren County will be entirely at the contractors expense and will be paid in advance for BLA's time.

Ray Bracken Nursery, Inc.
Rt. 9 Box 1698
Easley, SC 29640
(800) 992-4321

Charlies' Creek Nursery
P.O. Box 669
Iva, SC 29655
(864) 348-7849

Hawkersmith & Sons Nursery
Rt. 4 Box 4155
Tullahoma, TN 37388
(931) 455-5436

Select Trees
P.O. Box 6671
Athens, GA 30604
(706) 769-9879

Plantation Tree Company
Rt. 3 Box 198
Selma, AL 36701
(334) 875-9176

Mid Georgia Nursery
227 Rose Hill Road
Meansville, Georgia
(770) 567-3874

BoShanCee Nursery
214 County Lake Rd.
New Market, AL 35761
256.379.3826

Hunter Trees
PO Box 382733
Birmingham, AL 35238
1.866.348.6837

Cherry Lake
7836 Cherry Lake Road
Groveland, Florida 34736
(800) 429-2171

BOSTICK
LANDSCAPE ARCHITECTS

STATE OF ALABAMA
DAVID K.
BOSTICK
NUMBER
680
REGISTERED LANDSCAPE ARCHITECT

NOLA VANPEURSEM
ARCHITECTS, PC
MEMBERS OF THE AMERICAN INSTITUTE OF ARCHITECTS
(256) 533-6617
NVPARCHITECTS.COM
301 JEFFERSON STREET
HUNTSVILLE, ALABAMA 35801

THIS DRAWING MAY NOT BE REPRODUCED IN WHOLE OR IN PART WITHOUT THE CONSENT OF NOLA|VANPEURSEM ARCHITECTS

ALABAMA A&M UNIVERSITY
4900 MERIDIAN ST
HUNTSVILLE, ALABAMA
**WELCOME CENTER**

JOB NUMBER
18994

KSU / CDB / 01/25/2021
DRAWN - CHECKED - DATE

REVISIONS
No. Description Date
ADDENDUM #3 03/17/2021

SHEET TITLE
**LANDSCAPE DETAILS**

SHEET NUMBER
L-3.2
OF

## PROPRIETARY EQUIPMENT SCHEDULE (ITEMS SUPPLIED BY GENERAL CONTRACTOR)

SCHEDULED ITEMS ARE BY ALLOWANCE. SEE SPECS. (1)

EQUIPMENT TO BE SUPPLIED BY LOCAL PROVIDER AS INDICATED OR SELECTED BY FOOD SERVICE PROVIDER. ALTERNATE SPECIFICATIONS ARE TO BE SUBMITTED TO CFA ARCHITECT FOR REVIEW AND APPROVAL PRIOR TO ORDERING

| ITEM NO. | QUANTITY | DESCRIPTION OF EQUIPMENT | APPROVED MANUFACTURER | MECHANICAL | | | | | | | | | | | | | ITEM NO. | REMARKS |
|---|---|---|---|---|---|---|---|---|---|---|---|---|---|---|---|---|---|---|
| | | | | ELECTRICAL | | | | | | PLUMBING | | | | | | | | |
| | | | | VOLT | PH | KW | AMP | HP | NEMA-RATING | HW | CW | FW | FW2 | IW | DW | ROUGH-IN | | |
| 150 | 2 | BREAD RACK | LOCAL SUPPLIER | | | | | | | | | | | | | | 150 | |
| 206 | 5 | SOAP DISPENSER | ECOLAB MODEL#92021189 | | | | | | | | | | | | | | 206 | RE: ARCHITECTURAL SHEETS FOR DETAILS ON MOUNTING HEIGHTS AND LOCATIONS |
| 220 | 1 | COAT RACK | SAFCO MODEL #4162-24in | | | | | | | | | | | | | | 220 | |
| 260 | 1 | 45" VENT HOOD | HALTON HOODS | | | | | | | | | | | | | | 260 | HOOD SHROUD BY VENT HOOD MANUFACTURER; REFER TO SHOP DRAWINGS |
| 266 | 1 | 120" VENT HOOD | HALTON HOODS | | | | | | | | | | | | | | 266 | HOOD SHROUD BY VENT HOOD MANUFACTURER; REFER TO SHOP DRAWINGS |
| 269 | 1 | ANSUL FIRE SUPPRESSION SYSTEM | HALTON HOODS | 120 | 1 | | VERIFY | | DIRECT CONNECTION | | | | | | | | 269 | REFER TO MANUFACTURER SHOP DRAWINGS |
| 270 | 1 | ANSUL FIRE SUPPRESSION SYSTEM | HALTON HOODS | 120 | 1 | | VERIFY | | DIRECT CONNECTION | | | | | | | | 270 | REFER TO MANUFACTURER SHOP DRAWINGS |
| 355F | 1 | FAUCET FOR DECK MOUNTED HAND SINK | T&S MODEL #B-0328-CR-VF05 | | | | | | | 1/2" | 1/2" | | | | | P-6 @ 18"&19" AFF | 355F | |
| 359 | 2 | WALL MOUNTED SPLASH GUARD | G.C. | | | | | | | | | | | | | | 359 | SEE DETAILS PAGE K-901 FOR TYP. |
| 359L | 4 | WALL MOUNTED SPLASH GUARD | G.C. | | | | | | | | | | | | | | 359L | SEE DETAILS PAGE K-901 FOR TYP. |
| 360 | 3 | HAND SINK | G.C. | | | | | | | | | | | | 2" | | 360 | SEE DETAILS PAGE K-901 FOR TYP. |
| 360E | 1 | EMERGENCY EYEWASH STATION | ACORN MODEL #S0660-RH | | | | | | | | | | | | | P-42 | 360E | TO BE MOUNTED TO WALL BETWEEN 33 IN AND 45 IN AFF |
| 360F | 3 | FAUCET FOR WALL MOUNTED HAND SINK | T&S MODEL #B-1146-CFA-VF05 | | | | | | | 1/2" | 1/2" | | | | | P-5 @ 24" & 25" A.F.F. | 360F | |
| 360Fe | 1 | SENSOR FAUCET FOR WALL MOUNTED HAND SINK | TOTO MODEL #TEL165-C20E#CP | | | | | | | 1/2" | 1/2" | | | | | P-5 | 360Fe | (2) INCLUDED IN T&S KIT #B-2495-CFAS |
| 364 | 1 | 3 COMPARTMENT UTENSIL SINK | G.C. | | | | | | | | | | | 1 1/2" | | | 364 | SEE DETAILS PAGE K-901 FOR TYP. |
| 364F | 1 | FAUCET FOR UTENSIL SINK | T&S MODEL #B-0152-14-CRBCT | | | | | | | 1/2" | 1/2" | | | | | P-9 @ 12" A.F.F. | 364F | SEE DETAILS PAGE K-901 FOR TYP. |
| 366 | 1 | SINGLE BOWL VEGETABLE PREP SINK | G.C. | | | | | | | | | | | 1 1/2" | | | 366 | SEE DETAILS PAGE K-901 FOR TYP. |
| 366F | 1 | FAUCETS FOR VEGETABLE PREP SINK | T&S BRASS MODEL #B-0154-CR-C | | | | | | | 1/2" | 1/2" | | | | | | 366F | |
| 367FW | 1 | FILTERED WATER FAUCET (WALL MOUNTED) | T&S MODEL #B-0236-CR-063X | | | | | | | | | 1/2" | | | | (2) P-30 @ 48" A.F.F. | 367FW | |
| 370B | 1 | MOP SINK | G.C. | | | | | | | 1/2" | 1/2" | | | 3" | | (2) P-7 @ 36" A.F.F. | 370B | |
| 410 | 1 | WALK-IN FREEZER | G.C. | 120 | 1 | | 12.5 | | DIRECT CONNECTION | | | | | | | | 410 | |
| 410a | 1 | WALK-IN FREEZER CONDENSER | G.C. | 208 | 3 | | 14.6 | | DIRECT CONNECTION | | | | | | | | 410a | G.C./ARCHITECT TO LOCATE CONDENSER - NOT SHOWN ON PLANS |
| 410b | 1 | WALK-IN FREEZER EVAPORATOR | G.C. | 208 | 1 | | 1.5 | | DIRECT CONNECTION | | | | | 3/4" | | | 410b | |
| 449 | 1 | WALK-IN COOLER | G.C. | 120 | 1 | | 12.5 | | DIRECT CONNECTION | | | | | | | | 449 | |
| 449a | 1 | WALK-IN COOLER CONDENSER | G.C. | 208 | 3 | | 5.8 | | DIRECT CONNECTION | | | | | | | | 449a | GC SHALL INSTALL CONDENSER ON ROOF - NOT SHOWN ON DRAWINGS |
| 449b | 1 | WALK-IN COOLER EVAPORATOR | G.C. | 208 | 1 | | 1.0 | | DIRECT CONNECTION | | | | | 3/4" | | | 449b | |
| 651 | 1 | LOCKERS | G.C. | | | | | | | | | | | | | | 651 | 2 TIERS, 12 OPENINGS |
| 660 | 5 | PAPER TOWEL DISPENSER | G.C. | | | | | | | | | | | | | | 660 | RE: ARCHITECTURAL SHEETS FOR DETAILS ON MOUNTING HEIGHTS AND LOCATIONS |
| 661 | 1 | MOP RACK | G.C. | | | | | | | | | | | | | | 661 | |

## EQUIPMENT SCHEDULE (ITEMS SUPPLIED BY MILLWORK MANUFACTURER)

SCHEDULED ITEMS ARE BY ALLOWANCE. SEE SPECS. (2)

IF CLAYTON FIXTURE IS PROVIDING ALL THE MILLWORK IN THE MILLWORK PACKAGE, PLEASE CONTACT DONALD WILSON AT CLAYTON FIXTURE (404) 363-1665 - DONALD.WILSON@ACCESSCFA.COM.

| ITEM NO. | QUANTITY | DESCRIPTION OF EQUIPMENT | APPROVED MANUFACTURER | MECHANICAL | | | | | | | | | | | | | ITEM NO. | REMARKS |
|---|---|---|---|---|---|---|---|---|---|---|---|---|---|---|---|---|---|---|
| | | | | ELECTRICAL | | | | | | PLUMBING | | | | | | | | |
| | | | | VOLT | PH | KW | AMP | HP | NEMA-RATING | HW | CW | FW | FW2 | IW | DW | ROUGH-IN | | |
| 101 | 1 | FRONT SERVING COUNTER | G.C./MILLWORK MANUFACTURER | | | | | | | | | | | | | | 101 | REFER TO MANUFACTURER SHOP DRAWINGS |
| 108 | 1 | BACK SERVING COUNTER | G.C./MILLWORK MANUFACTURER | | | | | | | | | | | | | | 108 | REFER TO MANUFACTURER SHOP DRAWINGS |
| 109 | 1 | DESSERT COUNTER | G.C./MILLWORK MANUFACTURER | | | | | | | | | | | | | | 109 | REFER TO MANUFACTURER SHOP DRAWINGS |
| 110 | 1 | BACK SERVING COUNTER | G.C./MILLWORK MANUFACTURER | | | | | | | | | | | | | | 110 | REFER TO MANUFACTURER SHOP DRAWINGS |
| 111 | 1 | STAINLESS STEEL UNDER MOUNT HAND SINK | VOLLRATH MODEL #10101-1 | | | | | | | | | | | | 2" | | 111 | |
| 120 | 1 | BOARDS COUNTER | G.C./MILLWORK MANUFACTURER | | | | | | | | | | | | | | 120 | REFER TO MANUFACTURER SHOP DRAWINGS |

## EQUIPMENT SCHEDULE (ITEMS SUPPLIED BY THE FOOD SERVICE PROVIDER)

THESE ITEMS ARE LISTED FOR REFERENCE AND ARE NOT A PART OF THIS CONTRACT (1)

ALL EQUIPMENT IN THIS SCHEDULE IS TO BE PURCHASED BY THE FOOD SERVICE PROVIDER (FSP) OR GC AS INSTRUCTED BY FSP. PROPOSED ALTERNATES TO BE APPROVED BY CFA ARCHITECT

| ITEM NO. | QUANTITY | DESCRIPTION OF EQUIPMENT | APPROVED MANUFACTURER | MECHANICAL | | | | | | | | | | | | | ITEM NO. | REMARKS |
|---|---|---|---|---|---|---|---|---|---|---|---|---|---|---|---|---|---|---|
| | | | | ELECTRICAL | | | | | | PLUMBING | | | | | | | | |
| | | | | VOLT | PH | KW | AMP | HP | NEMA-RATING | HW | CW | FW | FW2 | IW | DW | ROUGH-IN | | |
| 180 | 1 | ORDER REGISTER | BY FOOD SERVICE PROVIDER | 120 | 1 | | 0.7 | | 5-20P | | | | | | | | 180 | |
| 180 | 4 | ORDER REGISTER | BY FOOD SERVICE PROVIDER | 120 | 1 | | 0.7 | | 5-20P | | | | | | | | 180 | |
| 180a | 1 | RADIAL ARM | BY FOOD SERVICE PROVIDER | | | | | | | | | | | | | | 180a | |
| 181 | 4 | CASH DRAWER | BY FOOD SERVICE PROVIDER | | | | | | | | | | | | | | 181 | |
| 182 | 4 | RECEIPT PRINTER | BY FOOD SERVICE PROVIDER | 120 | 1 | .04 | 1.80 | | 5-20P | | | | | | | | 182 | |
| 182L | 3 | LABEL PRINTER | BY FOOD SERVICE PROVIDER | 120 | 1 | | 1.7 | | 5-20P | | | | | | | | 182L | |
| 183 | 6 | ORDER MONITOR | BY FOOD SERVICE PROVIDER | 120 | 1 | 0.00 | 0.10 | | 5-20P | | | | | | | | 183 | |
| 183a | 6 | RADIAL ARM | BY FOOD SERVICE PROVIDER | | | | | | | | | | | | | | 183a | USED TO MOUNT ORDER MONITORS |
| 211B | 3 | FLY SYSTEM | BY FOOD SERVICE PROVIDER | 120 | 1 | 0.078 | 0.65 | | 5-15P | | | | | | | | 211B | |
| 315 | 2 | 8-HEAD BEVERAGE DISPENSER WITH ICE BIN | LANCER MODEL #85-2378T-111-07-CFA | 115 | 1 | | 10.00 | | 5-15P/5-15P | | | | | 3/4" | | | 315 | PROVIDED WITH (2) CORDS AND PLUGS PER TOWER |
| 316 | 2 | CO-2 TANK | BY FOOD SERVICE PROVIDER | | | | | | | | | | | | | | 316 | ORDER WITH WS1.25TC CONTROLLER; FLOOR DRAIN REQUIRED |
| 317 | 1 | BEVERAGE RACK SYSTEM (6 SHELF - 2 WIDE) | BY FOOD SERVICE PROVIDER | | | | | | | | | | | | | | 317 | |
| 318a | 1 | 8-STOP WATER MANIFOLD PANEL | ELLIS ENTERPRISE MODEL #636310 | | | | | | | | | 3/4" | | | | P-28 | 318a | INSTALLED BY PLUMBING CONTRACTOR - RE: PLUMBING SHEETS FOR DETAILS |
| 320 | 2 | TURBO CARBONATOR | BY FOOD SERVICE PROVIDER | 115 | 1 | .7 | 6.2 | | 5-20P | | | | | | | | 320 | |
| 364a | 1 | 3 COMPARTMENT SINK CHEMICAL DISPENSER | SOLIDSENSE | | | | | | | | | | | | | | 364a | |
| 366a | 1 | VEGETABLE WASH DISPENSER | ECOLAB | | | | | | | | | | | | | | 366a | |
| 370a | 1 | MOP SINK CHEMICAL DISPENSER | SOLIDSENSE | | | | | | | | | | | | | | 370a | |
| 665A | 1 | TRASH CART WITH LID | BY FOOD SERVICE PROVIDER | | | | | | | | | | | | | | 665A | |
| 672 | 4 | MENU BOARD | CINEPLEX | 120 | 0 | | | | 5-20P | | | | | | | | 672 | REFER TO MANUFACTURER SHOP DRAWINGS |

## EQUIPMENT SCHEDULE (ITEMS SUPPLIED BY THE FOOD SERVICE DIRECTOR IN COORDINATION WITH THE CHICK-FIL-A OPERATOR CONSULTANT)

SCHEDULED ITEMS INCLUDED IN PROPRIETARY EQUIPMENT ALLOWANCE #4. SEE SPECS FOR DETAILS (1)

ALL EQUIPMENT IN THIS SCHEDULE IS TO BE PURCHASED BY THE FOOD SERVICE DIRECTOR (FSD) FROM THE CHICK-FIL-A WAREHOUSE AS PART OF THE SMALLWARES PACKAGE

| ITEM NO. | QUANTITY | DESCRIPTION OF EQUIPMENT | APPROVED MANUFACTURER | MECHANICAL | | | | | | | | | | | | | ITEM NO. | REMARKS |
|---|---|---|---|---|---|---|---|---|---|---|---|---|---|---|---|---|---|---|
| | | | | ELECTRICAL | | | | | | PLUMBING | | | | | | | | |
| | | | | VOLT | PH | KW | AMP | HP | NEMA-RATING | HW | CW | FW | FW2 | IW | DW | ROUGH-IN | | |
| 202 | 4 | UNDER-COUNTER SLIM JIM TRASH CAN | RUBBERMAID MODEL #FG354060GRAY | | | | | | | | | | | | | | 202 | |
| 202A | 1 | UNDER-COUNTER SLIM JIM TRASH CAN | RUBBERMAID MODEL #1971258 | | | | | | | | | | | | | | 202A | |
| 210 | 1 | INGREDIENT BIN | RUBBERMAID MODEL #3602-88 | | | | | | | | | | | | | | 210 | |
| 225 | 1 | FAT VAT | PITCO FRIALATOR MODEL FAT VAT | | | | | | | | | | | | | | 225 | |

## EQUIPMENT SCHEDULE (FUTURE ITEMS)

THESE ITEMS ARE LISTED FOR REFERENCE AND ARE NOT A PART OF THIS CONTRACT (1)

| ITEM NO. | QUANTITY | DESCRIPTION OF EQUIPMENT | APPROVED MANUFACTURER | MECHANICAL | | | | | | | | | | | | | ITEM NO. | REMARKS |
|---|---|---|---|---|---|---|---|---|---|---|---|---|---|---|---|---|---|---|
| | | | | ELECTRICAL | | | | | | PLUMBING | | | | | | | | |
| | | | | VOLT | PH | KW | AMP | HP | NEMA-RATING | HW | CW | FW | FW2 | IW | DW | ROUGH-IN | | |
| F102 | 1 | CUP LID & CONDIMENT ORGANIZER | EAGLE | | | | | | | | | | | | | | F102 | CUP LID / CONDIMENT BIN WITH SAUCE BIN EXTENDER |
| F182L | 2 | LABEL PRINTER | BY FOOD SERVICE PROVIDER | 120 | 1 | | 1.7 | | 5-20P | | | | | | | | F182L | |
| F183 | 2 | ORDER MONITOR | BY FOOD SERVICE PROVIDER | 120 | 1 | | 0.10 | | 5-20P | | | | | | | | F183 | |
| F183a | 2 | RADIAL ARM | INNOVATIVE MODEL #7000 | | | | | | | | | | | | | | F183a | USED TO MOUNT ORDER MONITORS - NOT SHOWN ON PLAN |
| F315 | 1 | 8-HEAD BEVERAGE DISPENSER WITH ICE BIN | LANCER MODEL #85-2378T-111-07-CFA | 115 | 1 | | 10.00 | | 5-15P/5-15P | | | | | 3/4" | | | F315 | PROVIDED WITH (2) CORDS AND PLUGS PER TOWER |
| F444S | 1 | FUTURE THAWING CABINET-SINGLE - Rt Hand | TRAULSEN MODEL #RE132EUT-FHS | 120 | 1 | | 16.0 | | DIRECT CONNECTION | | | | | | | | F444S | |
| F503 | 1 | EGG STATION | ANTUNES MODEL #ES-600R 9300659 | 208 | 1 | 2.5 | 12.5 | | 6-20P | | | | | | | | F503 | |
| F523 | 1 | PRESSURE FRYER | HENNY PENNY MODEL #PFE-500 | 208 | 3 | 13.5 | 38.0 | | 15-50P | | | | | | | | F523 | PROVIDED WITH 6' CORD & PLUG |
| F524 | 1 | DUAL SIDE CLAMSHELL GRILL | GARLAND MODEL #CXPB12 | 208 | 3 | 3.3 | 24.1/28.2/ 23.1 | | 15-50P | | | | | | | | F524 | PROVIDED WITH 5' CORD & PLUG |

BIM 360://AL_00000_Alabama AM Univ_Huntsville_LIC_LIC/60_80743_ALABAMA A&M (Huntsville, AL)_LIC_EOK_R18.rvt
3/11/2021 2:54:23 PM
80743-K-802-EQUIPMENT SCHEDULE
C:\Revit Local Files\A&M Welcome Center\A&M WELCOME CENTER - LAURA LOCAL.rvt
3/23/2021 4:18:38 PM

STATE OF ALABAMA
FRANK J. NOLA JR.
3871
REG. NO.
ROBERT VAN PEURSEM
REGISTERED ARCHITECTS

NOLA VANPEURSEM
ARCHITECTS, PC
MEMBER OF THE AMERICAN INSTITUTE OF ARCHITECTS
301 JEFFERSON STREET
HUNTSVILLE, ALABAMA 35801
(256) 533-6617
NVPARCHITECTS.COM

THIS DRAWING MAY NOT BE REPRODUCED IN WHOLE OR IN PART WITHOUT THE CONSENT OF NOLA|VANPEURSEM ARCHITECTS

Chick-fil-A
5200 Buffington Road
Atlanta, Georgia
30349-2998

TriMark
Foodservice Equipment, Supplies and Design
STRATEGIC

ALABAMA A&M UNIVERSITY
# WELCOME CENTER
3900 MERIDIAN ST.
HUNTSVILLE, ALABAMA

CONSTRUCTION DOCUMENTS

# CHICK-FIL-A
## ALABAMA A&M
4900 MERIDIAN STREET
HUNSTVILLE, AL 35811

**LSL# 80743**

BUILDING TYPE / SIZE:
RELEASE:

**REVISION SCHEDULE**

| NO. | DATE | DESCRIPTION |
|---|---|---|
| 1 | 02/24/21 | ADDENDUM #2 |

CONSULTANT PROJECT #

PRINTED FOR: CONSTRUCTION DOCUMENTS
DATE: 02/25/21
DRAWN BY: RBM

Information contained on this drawing and in all digital files produced for above named project may not be reproduced in any manner without express written or verbal consent from authorized project representatives.

SHEET: EQUIPMENT SCHEDULE

SHEET NUMBER
**K-802**

JOB NUMBER
18994

1/25/2021
DRAWN - CHECKED - DATE

REVISIONS

| No. | Description | Date |
|---|---|---|
| 1 | ADDENDUM 2 | 2/12/2021 |
| 2 | ADDENDUM 3 | 3/22/2021 |

SHEET TITLE
**CFA EQUIPMENT SCHEDULE**

SHEET NUMBER
FS-1.20
OF

MIMS ENGINEERING INC.
CONSULTING ENGINEERS
112 SOUTH SIDE SQUARE, SUITE B
HUNTSVILLE, AL. 35801
PHONE (256) 489-0777
FAX (256) 489-0778
WWW.MIMSENGINEERING.COM

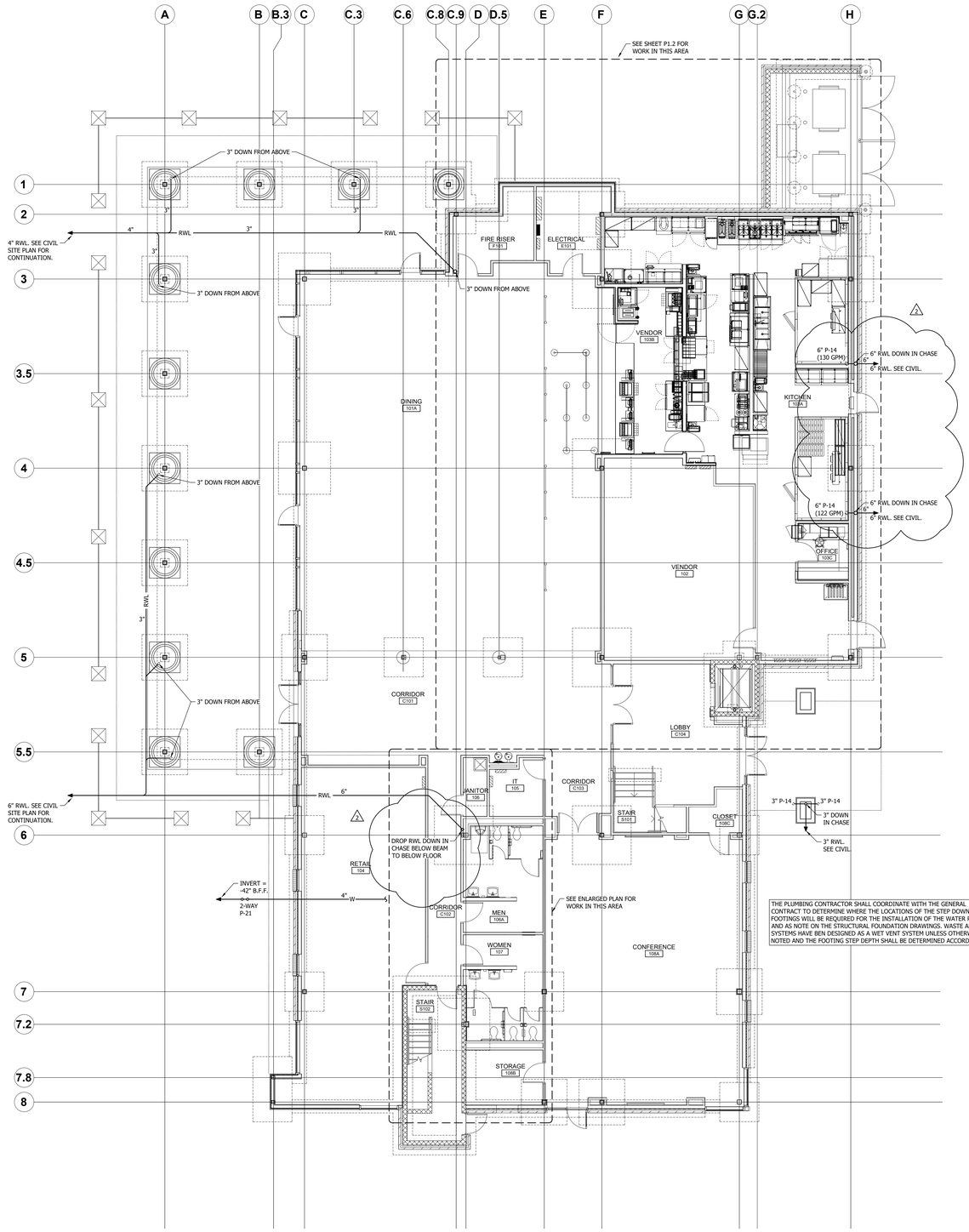


THE PLUMBING CONTRACTOR SHALL COORDINATE WITH THE GENERAL CONTRACT TO DETERMINE WHERE THE LOCATIONS OF THE STEP DOWN FOOTINGS WILL BE REQUIRED FOR THE INSTALLATION OF THE WATER PIPING AND AS NOTE ON THE STRUCTURAL FOUNDATION DRAWINGS. WASTE AND VENT SYSTEMS HAVE BEN DESIGNED AS A WET VENT SYSTEM UNLESS OTHERWISE NOTED AND THE FOOTING STEP DEPTH SHALL BE DETERMINED ACCORDINGLY.

FIRST FLOOR
## PLUMBING FLOOR PLAN
SCALE: 1/8" = 1'-0"

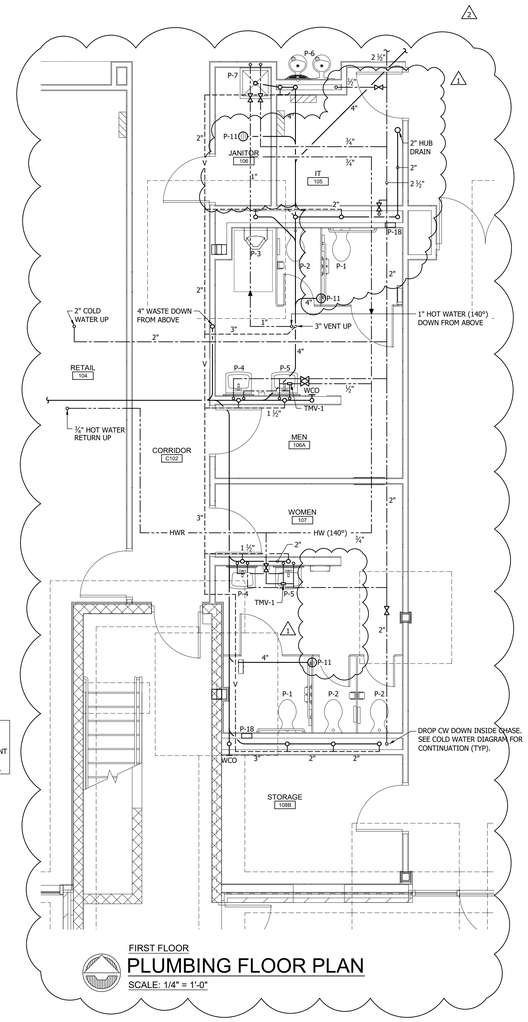


FIRST FLOOR
## PLUMBING FLOOR PLAN
SCALE: 1/4" = 1'-0"

ALABAMA REGISTERED
No. 15067
PROFESSIONAL
3/18/2021
ENGINEER
J.K. MIMS

NOLA VANPEURSEM
ARCHITECTS, PC
MEMBERS OF THE AMERICAN INSTITUTE OF ARCHITECTS
301 JEFFERSON STREET
HUNTSVILLE, ALABAMA 35801
(256) 533-6617
NVPARCHITECTS.COM

THIS DRAWING MAY NOT BE REPRODUCED IN WHOLE OR IN PART WITHOUT THE CONSENT OF NOLA|VANPEURSEM ARCHITECTS

ALABAMA A&M UNIVERSITY
# WELCOME CENTER
4900 MERIDIAN ST.
HUNTSVILLE, ALABAMA

JOB NUMBER
18994

| TS | JKM | 01/25/2021 |
|---|---|---|
| DRAWN | CHECKED | DATE |

REVISIONS

| No. | Description | Date |
|---|---|---|
| 1 | ADDENDUM 2 | 03/05/2021 |
| 2 | ADDENDUM 3 | 03/18/2021 |

SHEET TITLE
**PLUMBING FLOOR PLAN - FIRST FLOOR**

SHEET NUMBER
P-1.1
OF
9

MIMS ENGINEERING INC.
CONSULTING ENGINEERS
112 SOUTH SIDE SQUARE, SUITE B
HUNTSVILLE, AL. 35801
PHONE (256) 880-4142
FAX (256) 880-4143
WWW.MIMSENGINEERING.COM

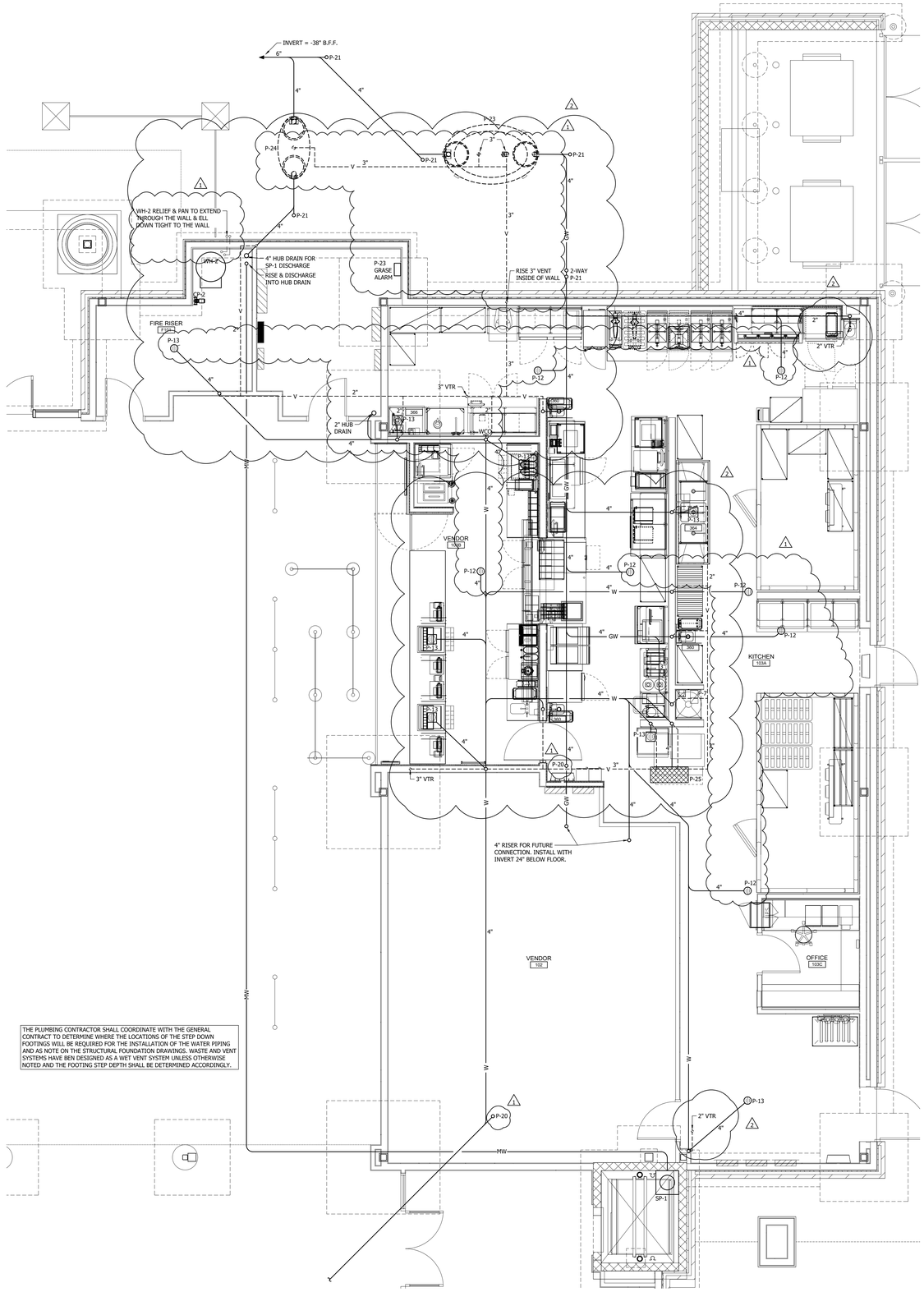


THE PLUMBING CONTRACTOR SHALL COORDINATE WITH THE GENERAL CONTRACT TO DETERMINE WHERE THE LOCATIONS OF THE STEP DOWN FOOTINGS WILL BE REQUIRED FOR THE INSTALLATION OF THE WATER PIPING AND AS NOTE ON THE STRUCTURAL FOUNDATION DRAWINGS. WASTE AND VENT SYSTEMS HAVE BEN DESIGNED AS A WET VENT SYSTEM UNLESS OTHERWISE NOTED AND THE FOOTING STEP DEPTH SHALL BE DETERMINED ACCORDINGLY.

FIRST FLOOR - KITCHEN
## GRAVITY PIPING SYSTEM
SCALE: 1/4" = 1'-0"

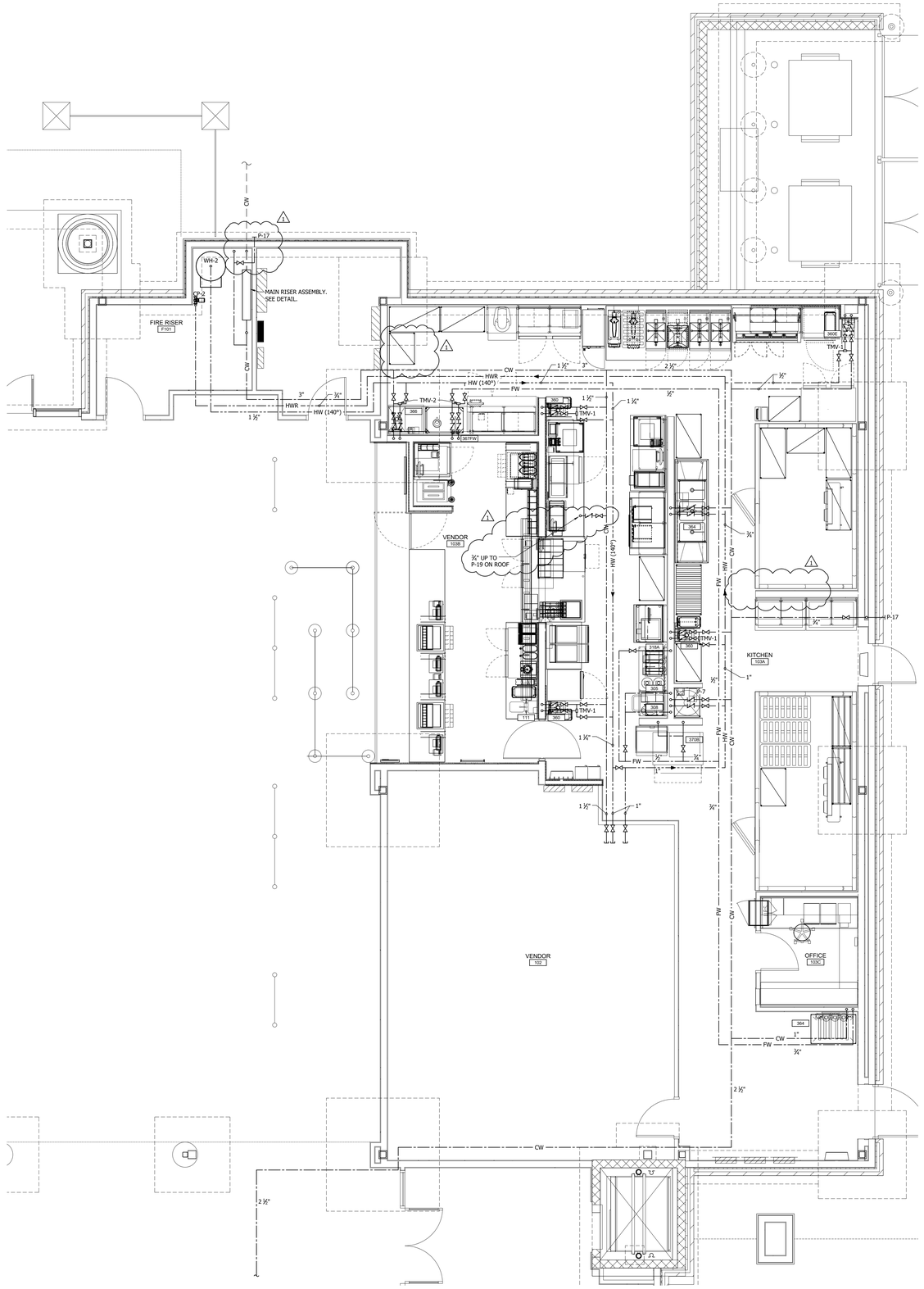


FIRST FLOOR - KITCHEN
## PRESSURE PIPING SYSTEM
SCALE: 1/4" = 1'-0"

ALABAMA REGISTERED No. 15067 PROFESSIONAL ENGINEER J.K. MIMS 3/18/2021

NOLA VANPEURSEM
ARCHITECTS, PC
MEMBERS OF THE AMERICAN INSTITUTE OF ARCHITECTS
301 JEFFERSON STREET
HUNTSVILLE, ALABAMA 35801
(256) 533-6617
NVPARCHITECTS.COM

THIS DRAWING MAY NOT BE REPRODUCED IN WHOLE OR IN PART WITHOUT THE CONSENT OF NOLA|VANPEURSEM ARCHITECTS

ALABAMA A&M UNIVERSITY
# WELCOME CENTER
4900 MERIDIAN ST
HUNTSVILLE, ALABAMA

JOB NUMBER
18994

| TS | JKM | 01/25/2021 |
|---|---|---|
| DRAWN | CHECKED | DATE |

REVISIONS

| No. | Description | Date |
|---|---|---|
| 1 | ADDENDUM 2 | 03/05/2021 |
| 2 | ADDENDUM 3 | 03/18/2021 |

SHEET TITLE
**PLUMBING FLOOR PLAN - FIRST FLOOR KITCHEN**

SHEET NUMBER
P-1.2
OF
9

MIMS ENGINEERING INC.
CONSULTING ENGINEERS
112 SOUTH SIDE SQUARE, SUITE B
HUNTSVILLE, AL 35801
PHONE: (256) 880-4143
FAX: (256) 880-4147
WWW.MIMSENGINEERING.COM

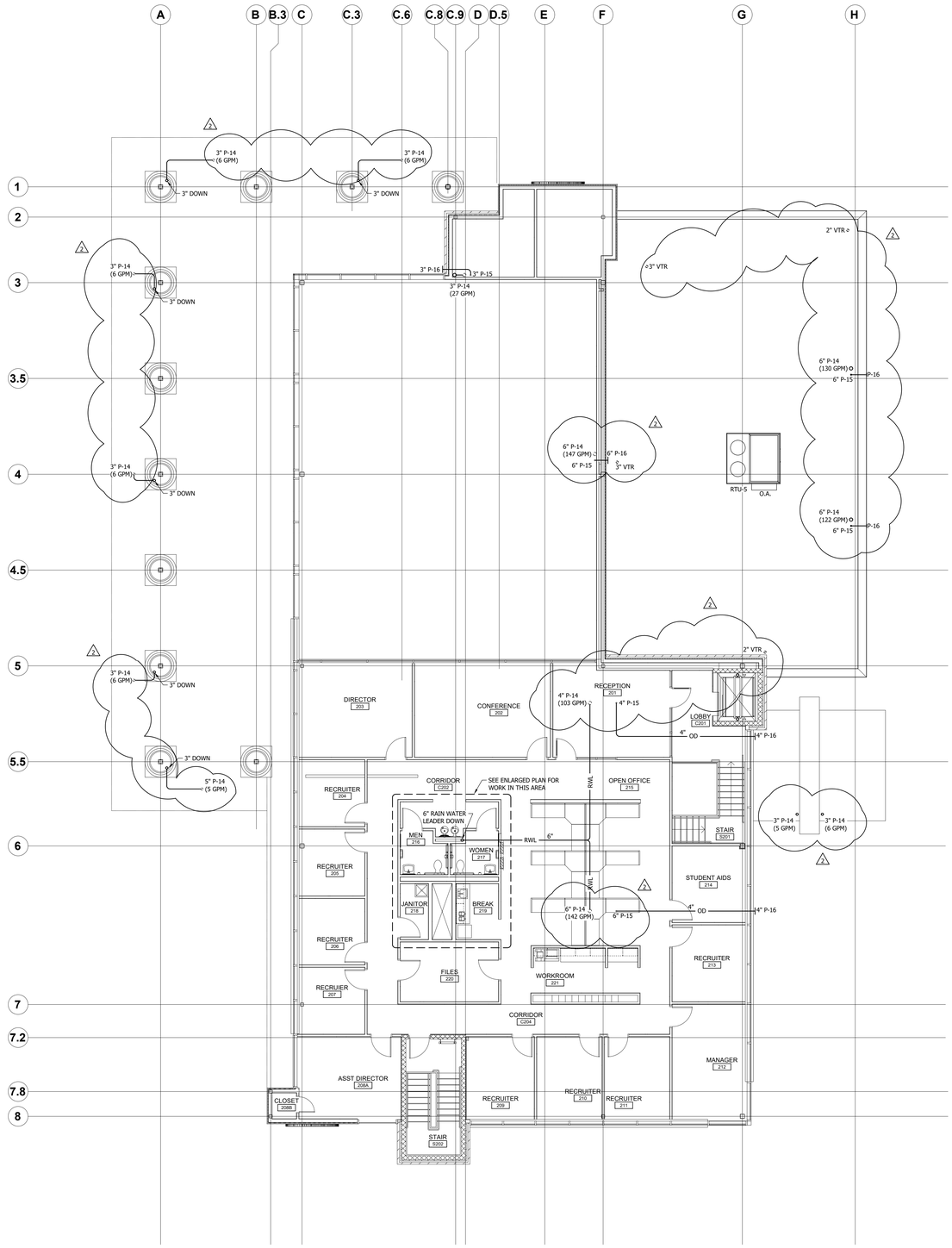


SECOND FLOOR
## PLUMBING FLOOR PLAN
SCALE: 1/8" = 1'-0"

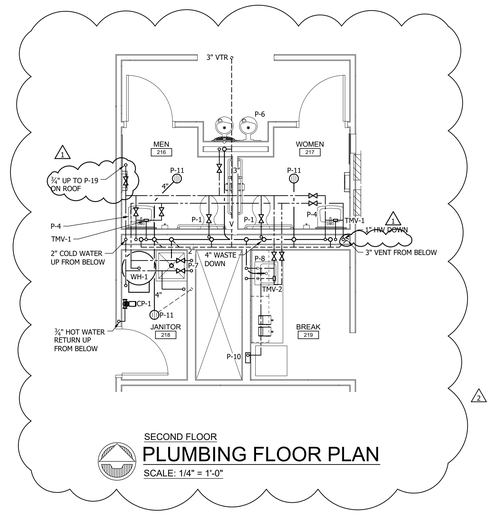


SECOND FLOOR
## PLUMBING FLOOR PLAN
SCALE: 1/4" = 1'-0"

ALABAMA REGISTERED No. 15067 PROFESSIONAL ENGINEER J.K. MIMS
3/18/2021

NOLA VANPEURSEM
ARCHITECTS, PC
MEMBERS OF THE AMERICAN INSTITUTE OF ARCHITECTS
301 JEFFERSON STREET
HUNTSVILLE, ALABAMA 35801
(256) 533-6617
NVPARCHITECTS.COM

THIS DRAWING MAY NOT BE REPRODUCED IN WHOLE OR IN PART WITHOUT THE CONSENT OF NOLA|VANPEURSEM ARCHITECTS

ALABAMA A&M UNIVERSITY
# WELCOME CENTER
4900 MERIDIAN ST
HUNTSVILLE, ALABAMA

JOB NUMBER
18994

| TS | JKM | 01/25/2021 |
|---|---|---|
| DRAWN | CHECKED | DATE |

REVISIONS

| No. | Description | Date |
|---|---|---|
| 1 | ADDENDUM 2 | 03/05/2021 |
| 2 | ADDENDUM 3 | 03/18/2021 |

SHEET TITLE
**PLUMBING FLOOR PLAN - SECOND FLOOR**

SHEET NUMBER
P-1.3
OF
9

MIMS ENGINEERING INC.
CONSULTING ENGINEERS
112 SOUTH SIDE SQUARE, SUITE B
HUNTSVILLE, AL. 35801
PHONE: (256) 489-0777
FAX: (256) 489-0778
WWW.MIMSENGINEERING.COM

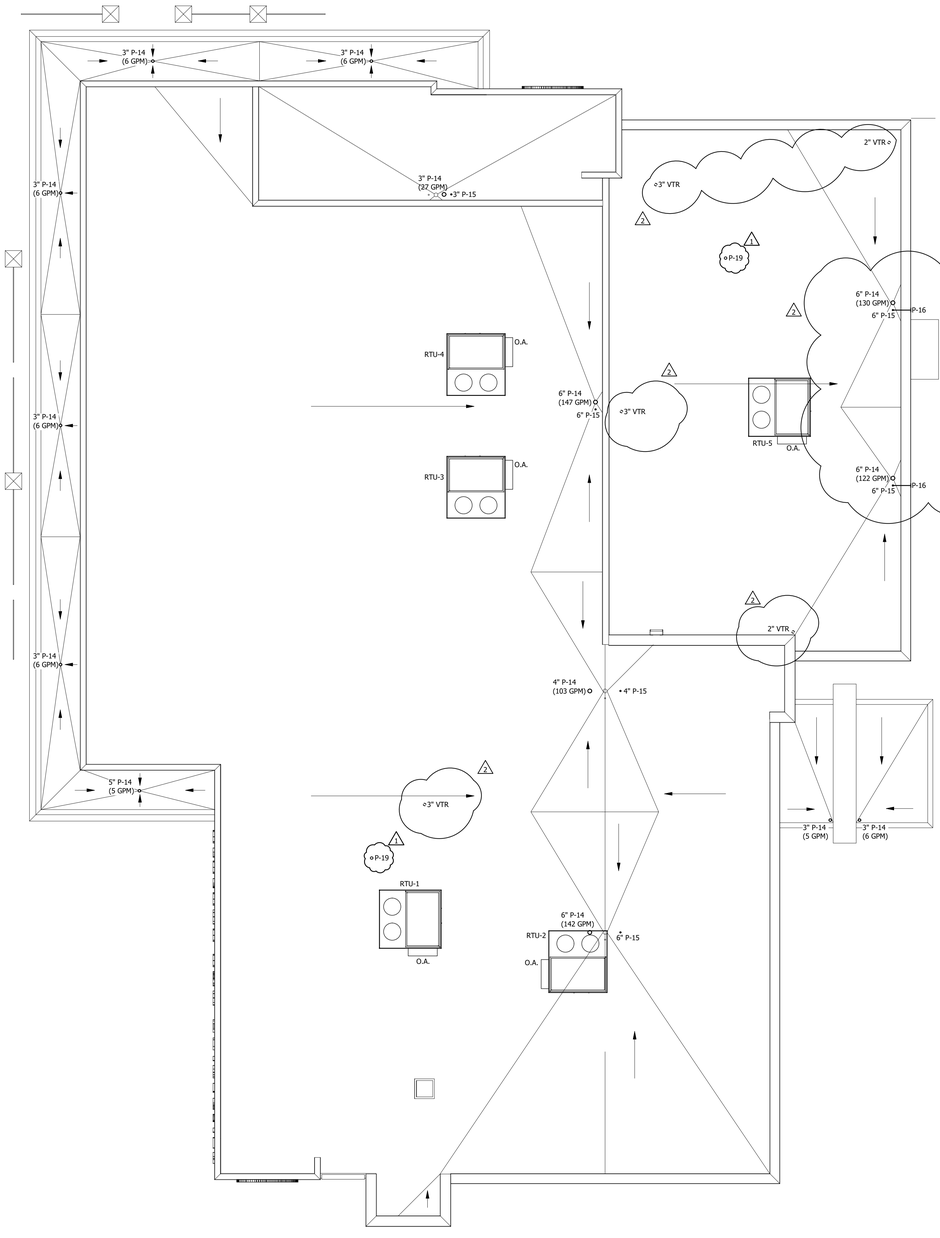


ROOF
## PLUMBING FLOOR PLAN
SCALE: 1/8" = 1'-0"

ALABAMA REGISTERED
No. 15067
PROFESSIONAL
3/18/2021
ENGINEER
J.K. MIMS

NOLA VANPEURSEM
ARCHITECTS, PC
MEMBERS OF THE AMERICAN INSTITUTE OF ARCHITECTS
301 JEFFERSON STREET
HUNTSVILLE, ALABAMA 35801
(256) 533-6617
NVPARCHITECTS.COM

THIS DRAWING MAY NOT BE REPRODUCED IN WHOLE OR IN PART WITHOUT THE CONSENT OF NOLA|VANPEURSEM ARCHITECTS

ALABAMA A&M UNIVERSITY
# WELCOME CENTER
4900 MERIDIAN ST.
HUNTSVILLE, ALABAMA

JOB NUMBER
18994

| DRAWN | CHECKED | DATE |
|---|---|---|
| TS | JKM | 01/25/2021 |

REVISIONS

| No. | Description | Date |
|---|---|---|
| 1 | ADDENDUM 2 | 03/05/2021 |
| 2 | ADDENDUM 3 | 03/18/2021 |

SHEET TITLE
**PLUMBING FLOOR PLAN - ROOF**

SHEET NUMBER
P-1.4
OF
9

MIMS ENGINEERING INC.
CONSULTING ENGINEERS
112 SOUTH SIDE SQUARE, SUITE B
HUNTSVILLE, AL. 35801
PHONE: (256) 881-4126
FAX: (256) 880-6743
WWW.MIMSENGINEERING.COM

**PLUMBING FIXTURE CONNECTION SCHEDULE**

| Fixture Symbol | Type of Fixture | Connection sizes: Waste | Grease Waste | Vent | CW | HW | RWL | Remarks |
|---|---|---|---|---|---|---|---|---|
| P-1 | ADA Water Closet | 4" | | 2" / 3" | 1 1/4" | | | Wall Mounted With Self Sustaining Seat, Manual Type Flush Valve & Floor Mounted Carrier |
| P-2 | Water Closet | 4" | | 2" / 3" | 1 1/4" | | | Wall Mounted With Self Sustaining Seat, Manual Type Flush Valve & Floor Mounted Carrier |
| P-3 | ADA Urinal | 2" | | 1-1/2" | 3/4" | | | Wall Mounted With Manual Type Flush Valve & Floor Mounted Carrier |
| P-4 | ADA Lavatory VT | 2" | | 1-1/2" | 1/2" | 1/2" | | Wall Mounted Vitreous China With Manual Faucet, Trim, Trap Wrap, Floor Mounted Carrier & ASSE 1070 TMV. Set To 110°F. |
| P-5 | Lavatory VT | 2" | | 1-1/2" | 1/2" | 1/2" | | Wall Mounted Vitreous China With Manual Faucet, Trim, Trap Wrap, Floor Mounted Carrier & ASSE 1070 TMV. Set To 110°F. |
| P-6 | Electric Water Cooler | 2" | | 1-1/2" | 1/2" | | | ADA Accessible Dual Push Bar Operation With Bottle Filler & Floor Mounting Carrier. 120 Volt, 370 Watts |
| P-7 | Mop Sink | 3" | | 2" | 3/4" | 3/4" | | Floor Mounted Terrazzo Neo-Corner Sink With Service Faucet, Trim, Stainless Steel Wall Guards & Mop Hanger |
| P-8 | Sink (Break Room) | 2" | | 1-1/2" | 1/2" | 1/2" | | ADA Accessible Single Compartment Stainless Steel Drop-in Sink With Gooseneck Faucet & ASSE 1070 TMV. Set To 120°F. |
| P-9 | Not Used | | | | | | | |
| P-10 | Recessed Wall Box | | | | 1/2" | | | Recessed Wall Box With 1/4 Turn Valve With Integral Water Hammer Arrestor. |
| P-11 | Floor Drain - Toilets / Janitor | 4" | | 2" | | | | Cast Iron Body With 7" Nickle Bronze Strainer, Construction Cover & Trap Guard |
| P-12 | Floor Drain - Kitchen | | 4" | 2" | | | | Cast Iron Body With 7" Stainless Steel Strainer, Construction Cover & Trap Guard |
| P-13 | Floor Sink | | | 2" | | | | Cast Iron Porcelain Coated Recessed Floor Sink With Center Opening Grate & Trap Guard |
| P-14 | Roof Drain | | | | | | Varies | Cast Iron Drain Assembly With Deck Extension, Clamping Collar & Aluminum Dome. See Detail. |
| P-15 | Roof Overflow Drain | | | | | | Varies | See Details On The Drawings |
| P-16 | Roof Drain Discharge Nozzle | | | | | | Varies | Wall Mounted Discharge With Mounting Flange, Stainless Steel Finish |
| P-17 | Exterior Wall Hydrant | | | | 3/4" | | | Freeze Proof, Anti-Siphon, Rough Bronze Finish In Recessed Locking Wall Box |
| P-18 | Interior Wall Hydrant | | | | 1/2" | | | Anti-Siphon, Rough Bronze Finish In Recessed Locking Wall Box |
| P-19 | Roof Hydrant | | | | 3/4" | | | Freezeproof, Anti-siphon Roof Hydrant With Air Gap, Air Vent, Boot Cover, Under Deck Flange Clamping Kit. |
| P-20 | Interior Cleanout | 4" | 4" | | | | | Cast Iron Body With Internal Bronze Plug & Nickle Bronze Cover. Install Flush With Floor |
| P-21 | Exterior Cleanout | 4" | | | | | | Cast Iron Body With Internal Bronze Plug & Ductile Iron Cover. Install In Concrete Pad As Detailed. |
| P-22 | Not Used | | | | | | | |
| P-23 | Grease Tank (Kitchen) | 4" | | 2 x 3" | | | | 2000 Gallon Capacity Underground Fiberglass Tank With Solids Separator Chamber & Grease Chamber, Remote Grease Level Indicator, H20 Loaded Manways & Anti Flotation Sab |
| P-24 | Hydraulic Oil Separator Tank | 4" | | 3" | | | | 250 Gallon Capacity Underground Fiberglass Tank With Remote Oil Level Indicator, H20 Loaded Manway & Anti Flotation Sab |
| P-25 | Trench Drain | 4" | | 2" | | | | Stainless Steel Floor Trough. Refer To Specifications |

Notes:
1. Pipes shall be extended to the fixture full size as indicated. Any increase or reduction in pipe size for actual connection shall be done at the extension of the pipe through the wall.
2. Coordinate mounting height of all wall mounted fixtures with the Architectural Drawings.
3. Coordinate With The Food Service Product Data Sheets & Shop Drawings For All Required Waste & Water Connections. All Indirect Waste Piping Shall Be Type K Rigid Copper With Brazed Joints.
4. See Schedules and Plumbing Devices & Notes for thermostatic mixing valve, pressure reducing valve and pressure gauge requirements.
5. Food service items have been indicated on the drawings for plumbing connection. See Chick-Fil-A Kitchen Equipment Schedule sheet K-801 for all items requireing pipe connections. She Chick-Fil-A sheet K-611 for corresponding fixture number identified in the scheule attributed to each item number. The Plumbing Contractor shall install all supplies, stops and traps for fixtures. The General Contractor shall ste all fixtures.

**PLUMBING DEVICES & NOTES**

1 New domestic water service shall be sized for 85 gpm. Coordinate the installation with the Site Utilities Contractor for location of connection of the water main extension 5' outside of the building.

2 Main building riser double check valve assembly shall be Watts model 774-NR-S-S, 3" lead free with stainless steel body and non-rising stem resilient seated gate valves and cast iron coated strainer. All connections shall be flanged.

3 Main building pressure reducing valve assembly shall consist of a main pressure reducing valves and one low flow PRV. PRV-1 main valve shall be Watts model LF223, 2-1/2" cast copper construction with stainless steel seat and stem to reduce up to 85 GPM from 110 PSI to 70 PSI with no greater than 12 PSI fall off pressure. PRV-2 shall be Watts model LF223, 1" for low flow conditions. Valve shall be lead free brass body, sealed spring cage, with renewable stainless steel seat and lead free copper disc holder. Install with reducers and increasers as necessary before and after the PRVs for connection to the listed pipe sizes. All isolation valves and unions as detailed shall be full size of the listed pipe size. A pressure gauge shall be installed on the leaving piping at each of the PRV assemblies. A full size bypass pipe shall be installed at the assembly with a normally closed valve

4 Food service drawings, elevations, details and schedules are included with the Architectural Drawings. It is the Plumbing Contractor's responsibility to review all drawings for pipe installations, additional fixtures to be provided, water rough-in locations and drains. The three compartment sink drain will be type K copper.

5 All kitchen grease waste pipe systems shall be cast iron. Vent pipe connections above the slab can be PVC unless installed inside a rated wall. All piping in rated walls and floors shall be cast iron.

6 Pipe Disinfectant: Piping to be flushed with clean potable water until discharge water appears clear. Add to the domestic water main 50 ppm (parts per million) of available chlorine. Allow the solution to stand for 24 hours, then flush thoroughly. Schedule the procedure with the local plumbing official for observation. Coordinate the clean water sampling with the health department. After flushing, chlorination and re-flushing, all system strainers shall be cleaned

7 Plumbing Contractor shall coordinate installation of plumbing vents with the Mechanical Contractor for a minimum of 15' clearance from all outside air intake systems on the mechanical equipment. Vents have been shown on the roof, but will be confirmed with the mechanical equipment being installed.

8 Structural steel furnished for equipment or piping support shall be cleaned and coated with two coats of rust inhibiting primer. Where pre-primed steel is used, primer shall be applied over the cut ends. All welded steel shall be wire brushed to remove any scale, ground smooth where necessary and then primed

9 ADA Accessible water closets to be installed with the flush valve handle or tank handle accessible on the wide side of the room or stall. Coordinate with the fixture specifications for the applicable fixture application

10 Hot and cold water systems in building areas are shown generally for connection to all fixtures. Prior to construction, the Plumbing, Mechanical, Fire Protection and Electrical Contractors shall determine the available space for their appropriate piping, duct, conduit, etc., and jointly create a shop drawing confirming their coordination and installation locations. Failure to coordinate does not constitute a change order when components will not fit within the designated areas

11 Fixtures are indicated on the waste and vent diagrams as a waste and vent system with the fixture waste connection to the vertical riser. The Plumbing Contractor shall not deviate from this system by combining fixtures or "laying down" fixtures unless approved in writing by the Engineer. Vents have been shown for basic routing above the ceiling.

**WATER HEATER SCHEDULE**

| | | |
|---|---|---|
| Mark | WH-1 | WH-2 |
| Building Area Served | Main Toilets | Kitchen |
| Room Location | Janitor 106 | Riser Rm. F101 |
| Gas (Natural) | | |
| CFH | | 199 |
| Pressure WG | | 7" |
| Efficiency, Minimum | | 97% |
| Intake/Vent Size | | 4" |
| Maximim Inlet Vent Length, Ft. | | 70 |
| Maximim Outlet Vent Length, Ft. | | 85 |
| Electrical | | |
| Volt/Phase | 208/1/60 | 115/1/60 |
| Total Elements | 1 | |
| Element kW | 3 | |
| Total kW | 3 | |
| Amps | 14.4 | 7.5 |
| Gallon Capacity | 19.9 | 100 |
| GPH Recovery @ 80° F Rise | 15 | 288 |
| GPH Recovery @ 100° F Rise | 12 | 230 |
| Maximum Delivery at 30 Minutes | N/A | 171 |
| Tank Temperature. °F | 140 | 140 |
| Mounting | | |
| Type | Wall | Floor |
| Configuration | Factory Frame | Detailed Floor Stand |
| Basis of Design | | |
| Manufacturer | Rheem | Rheem |
| Model | EGSP20 | GHE100SS-199(A) |
| Expansion Tank, Manufacturer | Amtrol | Amtrol |
| Series | STC | STC |
| Model | ST-5C | ST-30VC-DD |
| Accessories | As Listed | As Listed |
| Notes | As Listed | As Listed |

Electric Accessories
1 Provide optional wall mounting kit.
2 Provide surface mounted and temperature limiting control .
3 Provide steel tank with high temperature glass lining.
4 Provide magnesium anode rods.
5 Provide terminal block for field wiring.
6 Provide foam tank insulation.
7 Provide ASME construction
8 Provide ASME T & P pressure relief.
9 Provide a 3 year tank warranty.

Electric Notes:
1 See Sequence of Control and Controls Monitoring Points for interlocks thru the BAS.
2 Provide floor mounted welded angle steel stand with checkerplate steel top with auxiliary drain pan as detailed on the drawings.
3 Provide hot and cold water piping full pipe size as shown on the floor plans and diagrams. Valves to be full pipe size. Any reduction for connection to the unit will be made tight to the unit connection.
4 Provide a sensor well on the hot water discharge line and as shown on the drawings for the installation of a discharge temperature sensor by the Controls Contractor.

Gas Fired Accessories:
1 Provide intelligent leak detection system and automatic shut-off valve.
2 Provide color touch screen sytem with integrated WiFi and BacNet connection.
3 Provide condensate neutralizer system integral to the unit.
4 Provide porcelain coated heat exchanger and tank lining.
5 Provide fully modulating gas valve.
6 Provide ASME construction
7 Provide ASME T & P pressure relief.
8 Provide a 5 year tank warranty.
9 Provide direct power vent option, with concentric wall cap.
10 Provide category IV vent piping.

Gas Fired Notes:
1 See Sequence of Control and Controls Monitoring Points for interlocks thru the BAS.
2 Provide floor mounted welded angle steel stand with checkerplate steel top with auxiliary drain pan as detailed on the drawings.
3 Provide hot and cold water piping full pipe size as shown on the floor plans and diagrams. Valves to be full pipe size. Any reduction for connection to the unit will be made tight to the unit connection.
4 Provide a sensor well on the hot water discharge line and as shown on the drawings for the installation of a discharge temperature sensor by the Controls Contractor.
5 Provide intake and vent termination piping and termination kits as required by the manufacturer. Provide concentric vent kits where available.

Equals:
Equal water heaters by Bradford White and State will be considered with prior approvals.

**DOMESTIC HOT WATER CIRCULATION PUMP SCHEDULE**

| | | |
|---|---|---|
| Mark | CP-1 | CP-2 |
| Water Heater Service | WH-1 | WH-2 |
| Building Area Service | Main Toiilets | Kitchen |
| Room Location | Janitor 106 | Riser Rm. F101 |
| Pump Type | In-Line | In-Line |
| GPM | 5 | 5 |
| Head, Ft | 10 | 20 |
| Efficiency | 43.49 | 46.47 |
| RPM @ BEP | 2950 | 3600 |
| Motor HP | .08 | .166 |
| Impeller | Stainless Steel | Stainless Steel |
| Volt/Phase | 115/1/60 | 115/1/60 |
| Basis of Design | | |
| Manufacturer | Bell & Gossett | Bell & Gossett |
| Model | Ecocirc XL 20-35 | Ecocirc XL 36-45 |
| Notes | As Listed | As Listed |

Notes:
A Pump shall be lead free stainless steel body and all wetted parts.
B Motor shall be electronically communicated/permanent magnet with onboard user interface.
C Pump shall be monitored and controlled through the BAS. Coordinate with the Controls Contractor.
D Installed with the pump shall be assembly inlet and discharge service valves, a wye strainer, check valve and calibrated balancing valve. Set for the gpm as scheduled.
E Provide a sensor well on the circulation return as shown on the drawings for the installation of a temperature sensor by the Controls Contractor.
F See Sequence of Control and Controls Monitoring Points for interlocks thru the BAS.
G Provide valves and accessories as detailed on the drawings.

**PUMP SCHEDULE**

| | |
|---|---|
| Mark | SP-1 |
| Location | Sump Pit |
| Serving | Elevator EV101 |
| Pump Type | Submersible Effluent |
| GPM | 65 |
| Head, Ft | 15 |
| Efficiency % | 31 |
| RPM | 3450 |
| HP | .5 |
| Volt/Phase | 115/1/60 |
| Amp[s | 8 |
| Basis of Design | |
| Manufacturer | Stancor |
| Series | Avenger |
| Model | SE50A |
| Accessories | As Listed |
| Notes | A |

Accessories
1. Provide energize, de-energize and high water float assembly
2. Provide NEMA 4X controls enclosure
3. Provide audible and visual alarms.
4. Provide green pump indicator light.
5 Provide input power and float switch terminal blocks.
6. Provide grounding lugs.
7. Provide hand/off/automatic switch.
8. Provide metallic discharge check valve.
9. Provide auxiliary dry contacts for BAS interface.

Notes
A. See Sequence of Control and Control Monitoring Points

**COORDINATION AMONG TRADES**

The Civil Contractor, General/Structural Contractor, Fire Protection Contractor, Plumbing Contractor, Mechanical Contractor and Electrical Contractor shall coordinate with each other to determine the space required by, the location of, and the routing of their required respective structural members, beams, footing pours, piping, ductwork, conduits, etc. A jointly created scaled shop drawing at a minimum scale of 1/8" per 1'-0" with dimensions confirming their coordination and installation locations shall be submitted for approval prior to any installation. The minimum sheet size shall be 24" X 36". Failure to coordinate does not constitute a change order when components will not fit within the allocated space and may result in installed equipment and materials being removed at the contractor's expense.

**THERMOSTATIC MIXING VALVE SCHEDULE**

| | | |
|---|---|---|
| Mark | TMV-1 | TMV-2 |
| Minimum Flow, GPM | .25 | .5 |
| Flow At 5 PSI Pressure Drop | 3.5 | 4 |
| Flow At 10 PSI Pressure Drop | 5.5 | 6 |
| Inlet Temperature, °F | 140 | 140 |
| Discharge Temperature, °F | See Drawings | See Drawings |
| Maximum ΔP, PSI | 10 | 10 |
| Thermostat Assembly Type | Bi-metal | Bi-metal |
| TMV Inlet Size | 1/2" | 3/4" |
| TMV Discharge Size | 1/2" | 3/4" |
| Basis of Design | | |
| Manufacturer | Leonard | Leonard |
| Model | 270-LF-BV-DT | 370-LF-BV-DT |
| Accessories | As Listed | As Listed |

Accessories:
1. All thermostatic mixing valves will be ASSE 1017/1070 Compliant
2. Provide valves, integral check valves and unions on all inlet and discharge piping. Cap shall be vandal resistant and locking.
3. Provide a dial thermometer on the discharge pipe.
4. Provide ASSE 1017 & 1069 compliance.
5. Equal TMV's by Lawler or Powers will be considered.

**PIPE SUPPORT SCHEDULE**

| Pipe Size | Support Spacing: Sched 40 Black Steel | Copper | PVC | Cast Iron Soil Pipe | Hanger Rod Diameter |
|---|---|---|---|---|---|
| 1/2" | - | 5'-0" | 4'-0" | - | 3/8" |
| 3/4" | 7'-0" | 5'-0" | 4'-0" | - | 3/8" |
| 1" | 7'-0" | 6'-0" | 4'-0" | - | 3/8" |
| 1-1/4" | 7'-0" | 7'-0" | 4'-0" | - | 3/8" |
| 1-1/2" | 9'-0" | 8'-0" | 4'-0" | - | 3/8" |
| 2" | 10'-0" | 8'-0" | 4'-0" | 5'-0" | 3/8" |
| 2-1/2" | 10'-0" | 9'-0" | 4'-0" | 5'-0" | 1/2" |
| 3" | 10'-0" | 10'-0" | 4'-0" | 5'-0" | 1/2" |
| 4" | 10'-0" | 10'-0" | 4'-0" | 5'-0" | 1/2" |
| 6" | 10'-0" | 10'-0" | 4'-0" | 5'-0" | 5/8" |
| 8" | 10'-0" | 10'-0" | 4'-0" | 5'-0" | 3/4" |

Note: Rods may be reduced one size for double rod hangers, with 3/8" being the minimum diameter.

**WATER HAMMER ARRESTOR SCHEDULE**

| Mark | Manufacturer | Model | Size | Fixture Unit Capacity | Connection Size |
|---|---|---|---|---|---|
| WHA-A | Zurn | Z-1700 | 100 | 1 - 11 | 3/4" |
| WHA-B | Zurn | Z-1700 | 200 | 12 - 32 | 3/4" |
| WHA-C | Zurn | Z-1700 | 300 | 33 - 60 | 1" |
| WHA-D | Zurn | Z-1700 | 400 | 61 - 113 | 1" |
| WHA-E | Zurn | Z-1700 | 500 | 114 - 154 | 1" |
| WHA-F | Zurn | Z-1700 | 600 | 155 - 330 | 1" |

Notes:
1. Water hammer arrestors have been shown generally on the piping diagrams. The Plumbing Contractor shall be responsible for installing additional arrestors as necessary conforming to IPC, Local Code and the manufacturer's installation requirements based on the length of pipe and the total quantity of fixture units on each branch line.
2. Zurn Shoktrols arrestors have been specified. Equal arrestors shall be Watts SS Stainless Steel series or Jay R. Smith Hydrotrols.
3. Arrestors specified are rated for the required test pressures of the hot and cold water piping systems. All arrestors shall be installed when piping is tested.
4. Water hammer arrestors shall be installed with service isolation valves. Where arrestors occur inside a chase or wall and are inaccessible, an access door shall be provided. See details on the drawings for additional references.

**PLUMBING LEGEND**

CW — NEW COLD WATER PIPE ABOVE FLOOR
FW — NEW FILTERED WATER PIPE ABOVE FLOOR
HW(140°F) — NEW HOT WATER PIPE ABOVE FLOOR
HWR — NEW HOT WATER CIRCULATION RETURN PIPE
W — NEW WASTE PIPE
GW — NEW GREASE WASTE
NEW PRIMER DRAIN PIPE
RWL — RAIN WATER LEADER
WATER HTR RELIEF & PAN DRAIN
WHA = WATER HAMMER ARRESTOR
VTR = PLUMBING VENT THRU ROOF
TMV = THERMOSTATIC MIXING VALVE
SV = SERVICE VALVE

ALABAMA REGISTERED No. 15067 PROFESSIONAL ENGINEER J.K. MIMS 3/18/2021

NOLA VANPEURSEM
ARCHITECTS, PC
MEMBERS OF THE AMERICAN INSTITUTE OF ARCHITECTS
301 JEFFERSON STREET
HUNTSVILLE, ALABAMA 35801
(256) 533-6617
NVPARCHITECTS.COM

THIS DRAWING MAY NOT BE REPRODUCED IN WHOLE OR IN PART WITHOUT THE CONSENT OF NOLA|VANPEURSEM ARCHITECTS

ALABAMA A&M UNIVERSITY
**WELCOME CENTER**
4900 MERIDIAN ST
HUNTSVILLE, ALABAMA

JOB NUMBER
18994

TS / JKM / 01/25/2021
DRAWN - CHECKED - DATE

REVISIONS

| No. | Description | Date |
|---|---|---|
| 1 | ADDENDUM 2 | 03/05/2021 |
| 2 | ADDENDUM 3 | 03/18/2021 |

SHEET TITLE
**PLUMBING NOTES, SCHEDULES, & LEGEND**

SHEET NUMBER
P-2.1
OF
9

MIMS ENGINEERING INC.
CONSULTING ENGINEERS
112 SOUTH SIDE SQUARE, SUITE B
HUNTSVILLE, AL. 35801
PHONE (256) 489-0167
FAX (256) 489-0168
WWW.MIMSENGINEERING.COM

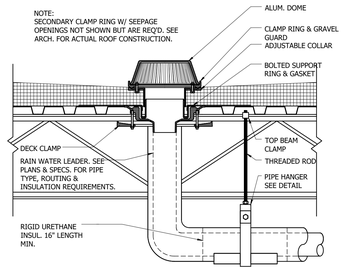


## ROOF DRAIN DETAIL
NOT TO SCALE

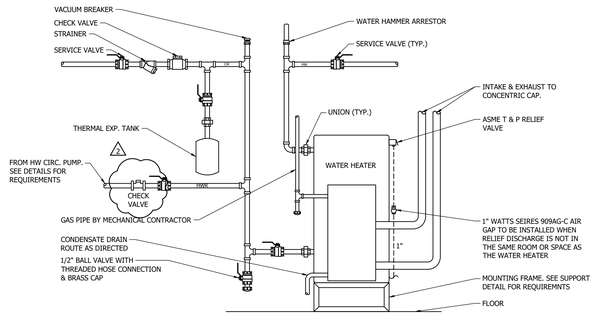


WHDET01
WH-2

## WATER HEATER DETAIL
NOT TO SCALE

NOTES:

1. WHERE THE DOMESTIC WATER CIRCULATION PUMP DAILY OPERATION IS CONTROLLED THRU THE BAS, THE LISTED 7 DAY TIMECLOCK WILL NOT BE FURNISHED. THE PLUMBING CONTRACTOR SHALL FURNISH A SENSOR WELL FOR THE INSTALLATION OF A TEMPERATURE SENSOR PROVIDED BY THE CONTROLS CONTRACTOR. THE IMMERSION AQUASTAT WILL ENERGIZE THE PUMP DURING OCCUPIED TIMES.

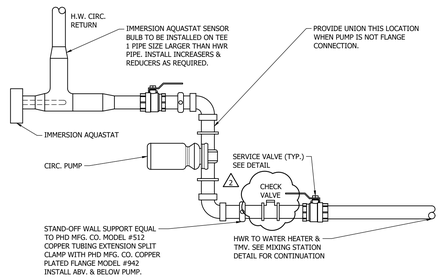


## CIRCULATION PUMP DETAIL
NOT TO SCALE

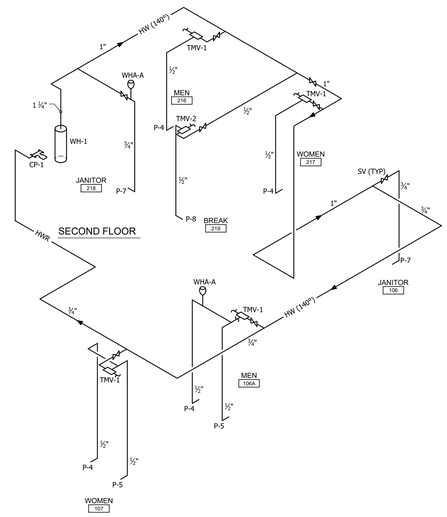


FIRST FLOOR
## HOT WATER DIAGRAM
NOT TO SCALE

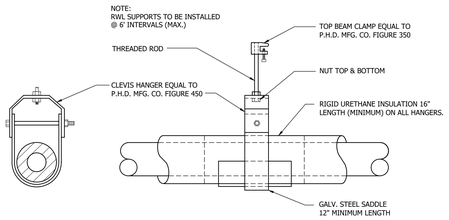


RAIN WATER LEADER
## PIPE HANGER DETAIL
NOT TO SCALE

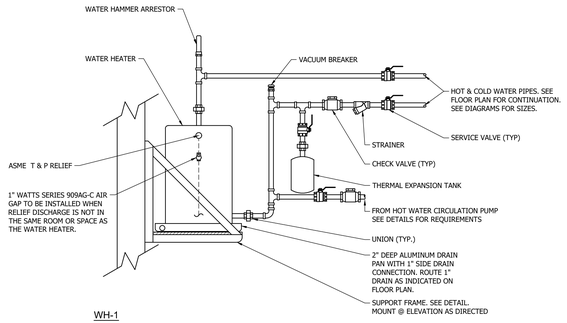


WH-1
## WATER HEATER PIPING DETAIL
NOT TO SCALE

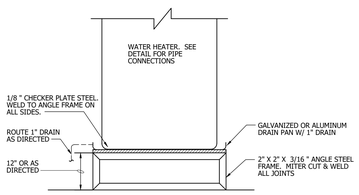


WH-2 WATER HEATER
## SUPPORT DETAIL
NOT TO SCALE

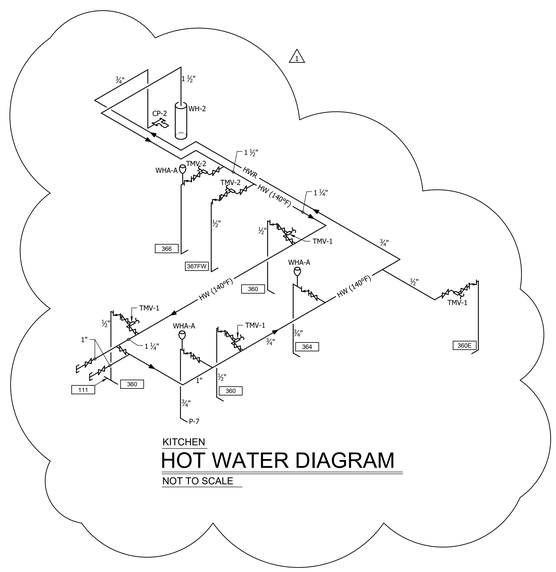


KITCHEN
## HOT WATER DIAGRAM
NOT TO SCALE

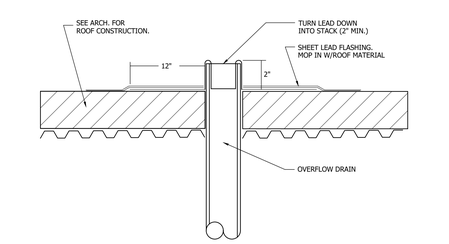


RAIN WATER
## ROOF OVERFLOW DRAIN DETAIL
NOT TO SCALE

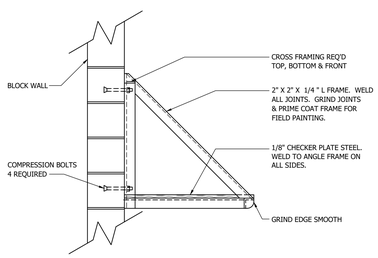


P-XX WATER HEATER
## MOUNTING FRAME DETAIL
NOT TO SCALE

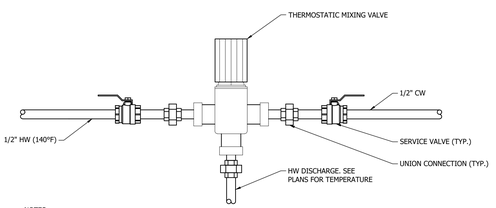


NOTES:
1) PIPING: COPPER, STANDARD TUBE SIZE.
2) REDUCE CW & HW LINE SIZES AT MIXING VALVE STATION.
5) ALL PIPING TO BE INSULATED PER SPEC'S
6) INSTALL BELOW CABINETS, ABOVE LAY-IN CEILING WHEN AVAILABLE AND LAST OPTION BELOW LAVATORY.

ASSE 1070
## TMV DETAIL
NOT TO SCALE

ALABAMA REGISTERED
No. 15067
PROFESSIONAL
3/18/2021
ENGINEER
J.K. MIMS

NOLA VANPEURSEM
ARCHITECTS, PC
MEMBERS OF THE AMERICAN INSTITUTE OF ARCHITECTS
301 JEFFERSON STREET
HUNTSVILLE, ALABAMA 35801
(256) 533-6617
NVPARCHITECTS.COM

THIS DRAWING MAY NOT BE REPRODUCED IN WHOLE OR IN PART WITHOUT THE CONSENT OF NOLA|VANPEURSEM ARCHITECTS

ALABAMA A&M UNIVERSITY
# WELCOME CENTER
4900 MERIDIAN ST.
HUNTSVILLE, ALABAMA

JOB NUMBER
18994

TS / JKM / 01/25/2021
DRAWN - CHECKED - DATE

REVISIONS

| No. | Description | Date |
|---|---|---|
| 1 | ADDENDUM 2 | 03/05/2021 |
| 2 | ADDENDUM 3 | 03/18/2021 |

SHEET TITLE
**HOT WATER DETAILS & RISER DIAGRAM**

SHEET NUMBER
P-2.2
OF
9

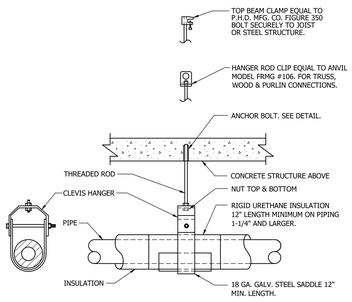


HOT & COLD WATER

## PIPE HANGER DETAIL

NOT TO SCALE

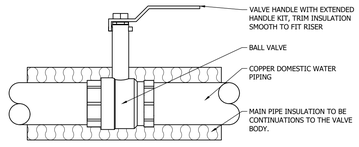


HOT & COLD WATER PIPING

## SERVICE VALVE DETAIL

NOT TO SCALE

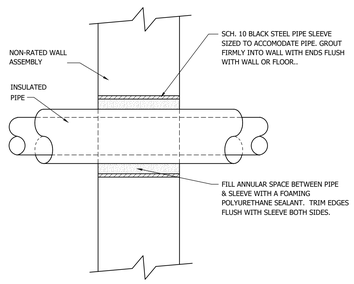


NON-RATED WALL

## PIPE SLEEVE DETAIL

NOT TO SCALE

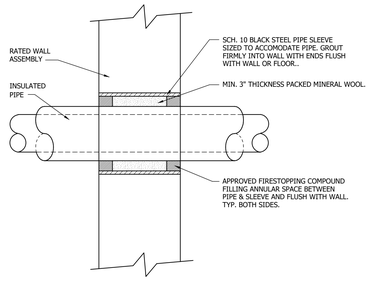


RATED-U.L. LISTED WALL

## PIPE SLEEVE DETAIL

NOT TO SCALE

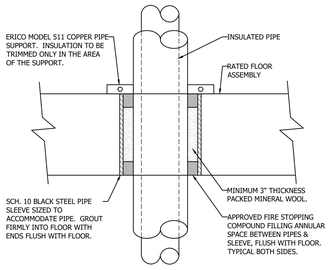


RATED-U.L. LISTED FLOOR

## PIPE SLEEVE DETAIL

NOT TO SCALE

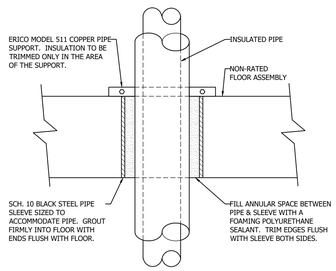


NON-RATED FLOOR

## PIPE SLEEVE DETAIL

NOT TO SCALE

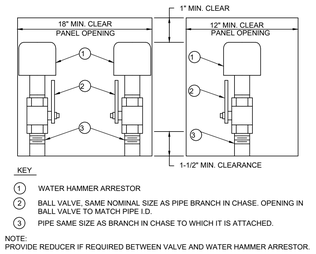


KEY

1. WATER HAMMER ARRESTOR
2. BALL VALVE, SAME NOMINAL SIZE AS PIPE BRANCH IN CHASE. OPENING IN BALL VALVE TO MATCH PIPE I.D.
3. PIPE SAME SIZE AS BRANCH IN CHASE TO WHICH IT IS ATTACHED.

NOTE:
PROVIDE REDUCER IF REQUIRED BETWEEN VALVE AND WATER HAMMER ARRESTOR.

SINGLE AND DOUBLE APPLICATION

## TYPICAL WATER HAMMER PANEL INSTALLATION

NOT TO SCALE

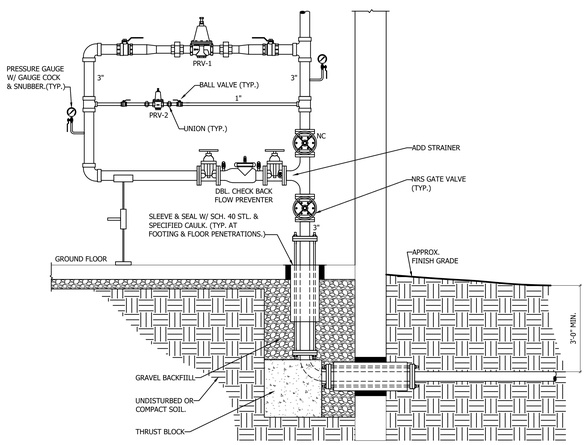


## COLD WATER MAIN RISER DETAIL

NOT TO SCALE

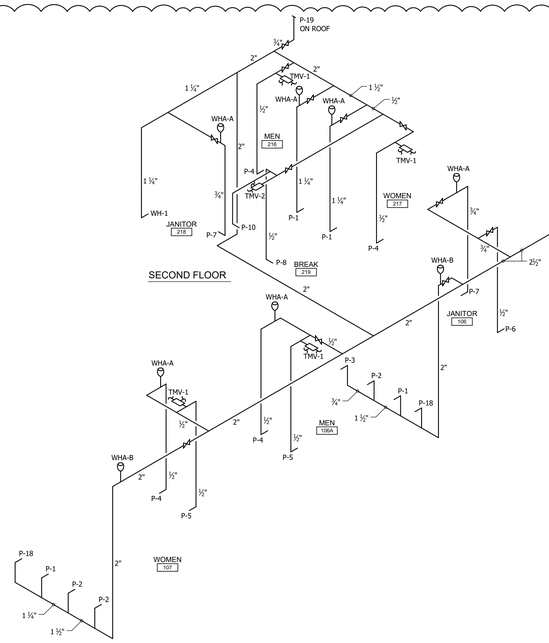


## COLD WATER DIAGRAM

NOT TO SCALE

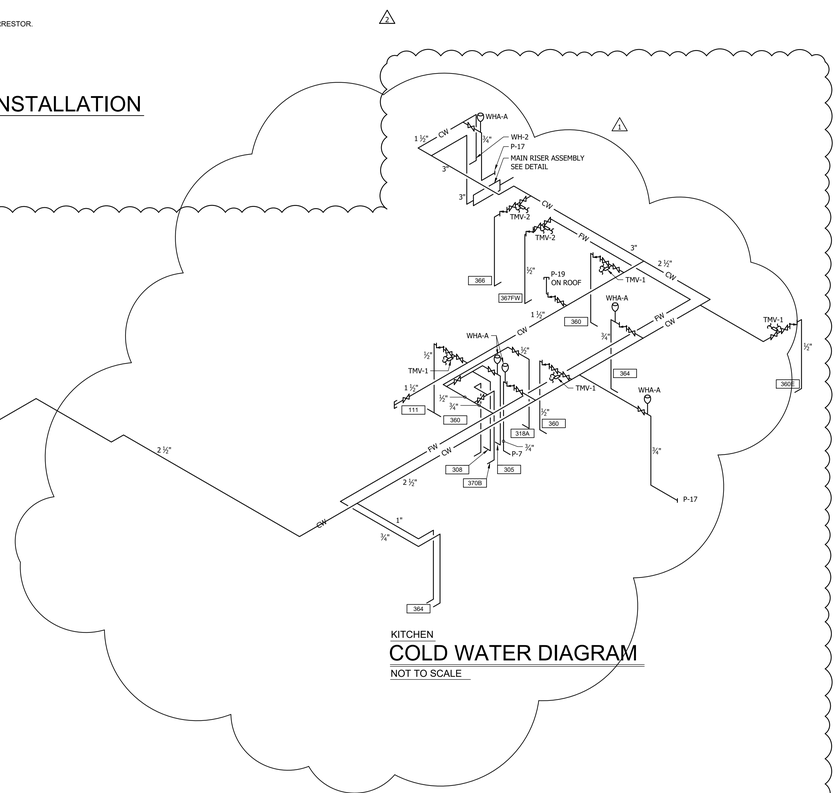


KITCHEN

## COLD WATER DIAGRAM

NOT TO SCALE

MIMS ENGINEERING INC.
CONSULTING ENGINEERS
112 SOUTH SIDE SQUARE, SUITE B
HUNTSVILLE, AL. 35801
PH. (256) 880-8472
FAX (256) 880-8475
WWW.MIMSENGINEERING.COM

ALABAMA REGISTERED No. 15067 PROFESSIONAL ENGINEER J.K. MIMS
3/18/2021

NOLA VANPEURSEM ARCHITECTS, PC
MEMBERS OF THE AMERICAN INSTITUTE OF ARCHITECTS
301 JEFFERSON STREET
HUNTSVILLE, ALABAMA 35801
(256) 533-6617
NVPARCHITECTS.COM

THIS DRAWING MAY NOT BE REPRODUCED IN WHOLE OR IN PART WITHOUT THE CONSENT OF NOLA|VANPEURSEM ARCHITECTS

ALABAMA A&M UNIVERSITY

# WELCOME CENTER

4900 MERIDIAN ST.
HUNTSVILLE, ALABAMA

JOB NUMBER
18994

TS / JKM / 01/25/2021
DRAWN - CHECKED - DATE

REVISIONS

| No. | Description | Date |
|---|---|---|
| 1 | ADDENDUM 2 | 03/05/2021 |
| 2 | ADDENDUM 3 | 03/18/2021 |

SHEET TITLE
**COLD WATER DETAILS & RISER DIAGRAM**

SHEET NUMBER
P-2.3
OF
9

MIMS ENGINEERING INC.
CONSULTING ENGINEERS
112 SOUTH SIDE SQUARE, SUITE B
HUNTSVILLE, AL. 35801
PHONE (256) 880-0747
FAX (256) 880-0748
WWW.MIMSENGINEERING.COM

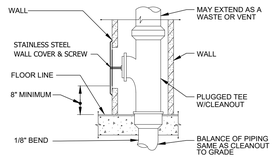


## WALL CLEANOUT DETAIL (WCO)
NOT TO SCALE

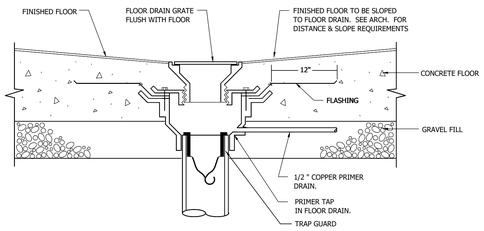


FLOOR ON GRADE
## FLOOR DRAIN DETAIL
NOT TO SCALE

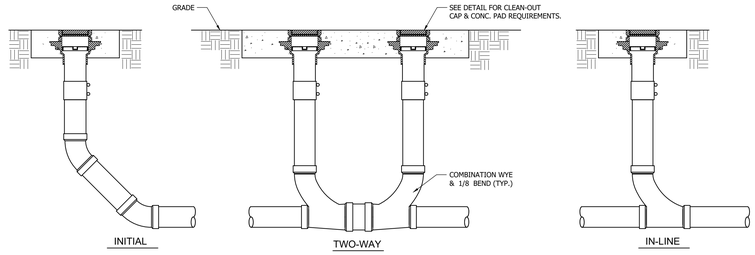


## EXTERIOR CLEANOUT DETAILS
NOT TO SCALE

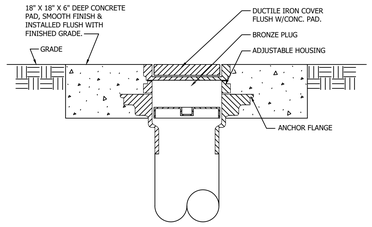


## EXTERIOR CLEANOUT DETAIL
NOT TO SCALE

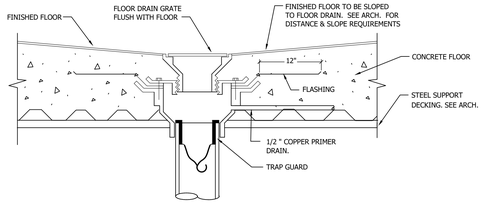


WVDET31
FLOOR ON STRUCTURE
## FLOOR DRAIN DETAIL
NOT TO SCALE

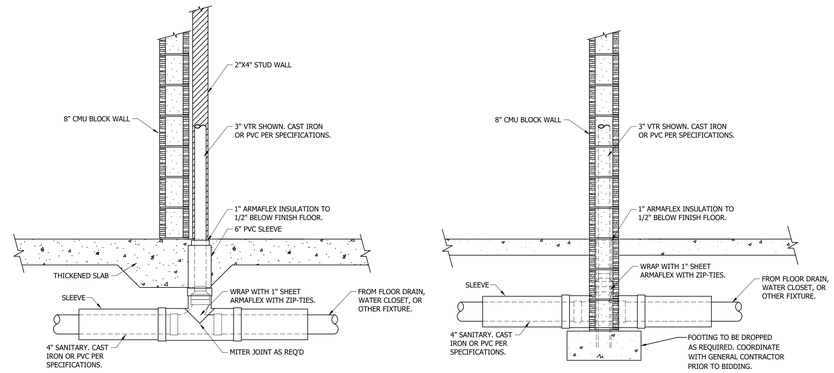


NOTES:
1. SLEEVES ARE NOT SHOWN ON FLOOR PLANS BUT ARE REQUIRED AT ALL FOUNDATION WALLS.
2. SLEEVES SHALL BE 2 PIPE SIZES LARGER THAN THE SANITARY OR VENT PIPE.
3. INSTALLATION TO ALLOW FOR RELIEVING ARCH WHERE PIPES PASS THRU OR UNDER FOOTINGS
4. SLEEVE SHALL BE GALV. STEEL PIPE OR CAST IRON FOR LOAD BEARING WALLS. PVC WILL BE ALLOWED ON NON-LOAD BEARING WALLS.

## RELIEVING ARCH DETAILS
NOT TO SCALE

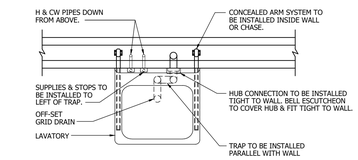


HANDICAPPED LAV.
## PIPE INSTALLATION DETAIL
NOT TO SCALE

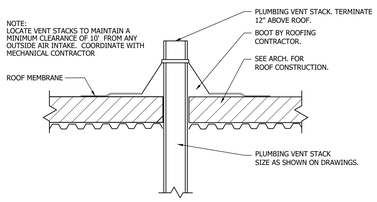


## PLUMBING VENT THRU ROOF DETAIL
NOT TO SCALE

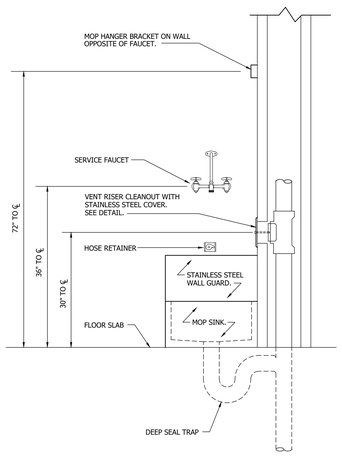


## MOP SINK INSTALLATION DETAIL
NOT TO SCALE

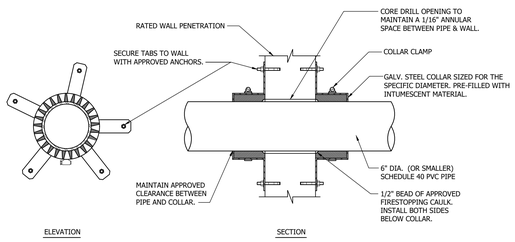


PVC PIPE THRU WALL (U.L. LISTED)
## FIRE STOPPING DETAIL
NOT TO SCALE

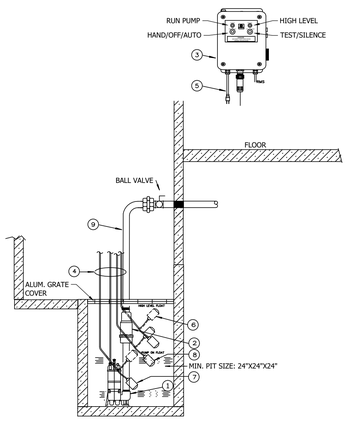


1. STANCOR MODEL SE-50A SUBMERSIBLE EFFLUENT PUMP 0.50 HP, 115 VOLT, 3600 RPM, 2" DISCHARGE CONNECTION
2. STANCOR CHECK VALVE
3. STANCOR SERIES CB100-1 115V, 1 PHASE CONTROL SYSTEM WITH OPTIONAL BUILT IN AUDIBLE AND VISUAL ALARM PROVIDE SILENCING BUTTON FOR AUDIBLE ALARM BUILT INTO PANEL. PANEL SHALL HAVE ADDITIONAL CONTACT FOR A REMOTE ALARM CONNECTED TO BUILDING AUTOMATION SYSTEM. (BAS) LIGHTS FOR PUMP RUN POWER, AND HIGH LIQUID LEVEL.
4. FLOAT CABLES, ON/OFF/HI-LEVEL
5. POWER CABLE, COORDINATE LENGTH WITH FIELD CONDTIONS.
6. HIGH LIQUID ALARM FLOAT WITH CLAMP DEVICE TO MOUNT TO PUMP DISCHARGE PIPING
7. PUMP ON FLOAT WITH CLAMP DEVICE TO MOUNT TO PUMP DISCHARGE PIPING
8. PUMP OFF FLOAT WITH CLAMP DEVICE TO MOUNT TO PUMP DISCHARGE PIPING
9. DISCHARGE OFF PUMP EXTENDING TO THE OIL INTERCEPTOR TO BE METALLIC PIPE. ROUTING OF PIPING TO BE COORDINATED WITH THE ELEVATOR INSTALLER.

WVDET27C
ELEVATOR PIT
## SUMP PUMP DETAIL
NOT TO SCALE

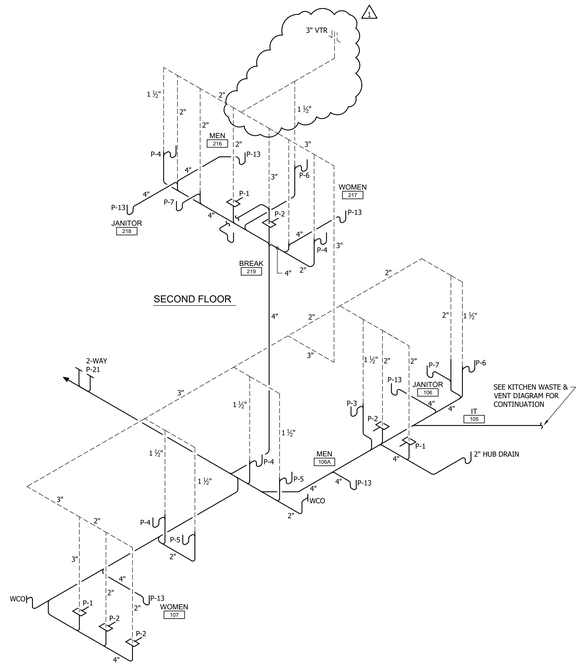


FIRST FLOOR RESTROOMS
## WASTE & VENT DIAGRAM
NOT TO SCALE

NOLA VANPEURSEM
ARCHITECTS, PC
MEMBERS OF THE AMERICAN INSTITUTE OF ARCHITECTS
301 JEFFERSON STREET
HUNTSVILLE, ALABAMA 35801
(256) 533-6617
NVPARCHITECTS.COM

THIS DRAWING MAY NOT BE REPRODUCED IN WHOLE OR IN PART WITHOUT THE CONSENT OF NOLA|VANPEURSEM ARCHITECTS

ALABAMA A&M UNIVERSITY
# WELCOME CENTER
4900 MERIDIAN ST.
HUNTSVILLE, ALABAMA

JOB NUMBER
18994

TS / JKM / 01/25/2021
DRAWN - CHECKED - DATE

REVISIONS

| No. | Description | Date |
|---|---|---|
| 1 | ADDENDUM 3 | 03/18/2021 |

SHEET TITLE
**WASTE & VENT DETAILS & RISER DIAGRAM**

SHEET NUMBER
P-2.4
OF
9

MIMS ENGINEERING INC.
CONSULTING ENGINEERS
112 SOUTH SIDE SQUARE, SUITE B
HUNTSVILLE, AL. 35801
PH. (256) 489-0167
FAX (256) 489-0168
WWW.MIMSENGINEERING.COM

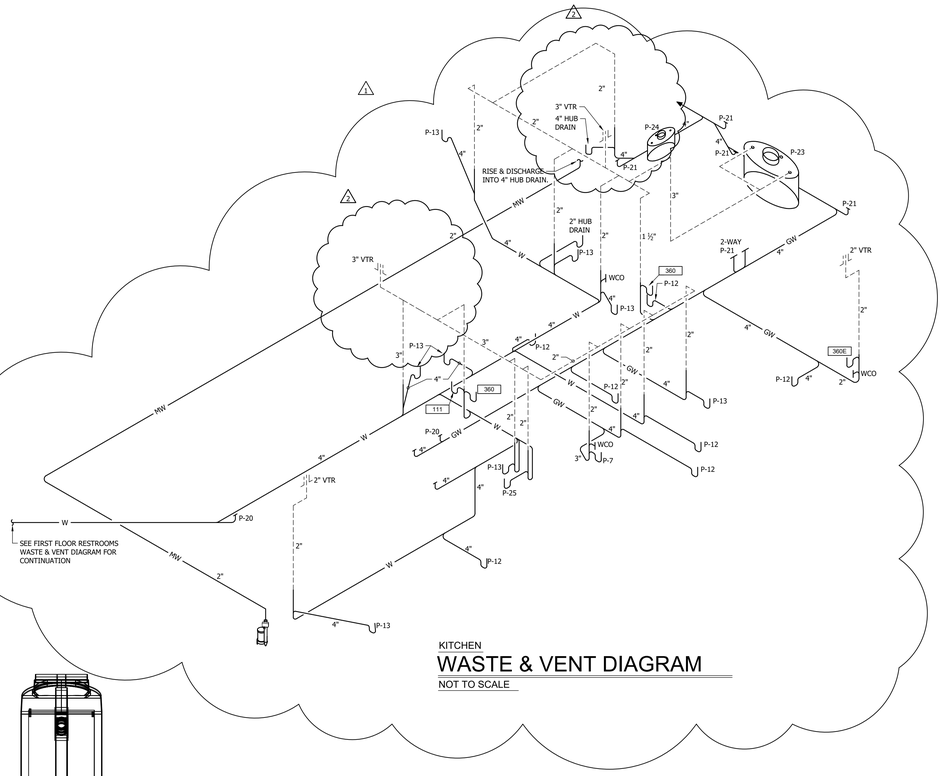


KITCHEN

## WASTE & VENT DIAGRAM

NOT TO SCALE

NOTES:

1. REFER TO INSTALLATION PROCEDURE AND INSTALLATION CHECKLIST
2. GEOTEXTILE FABRIC SHOULD BE USED IF THE NATIVE SOIL HAS SMALL PARTICLES AND MORE THAN 3% OF ITS WEIGHT PASSING THROUGH A #8 SIEVE (2.38mm SQUARE SCREEN OPENING) REGARDLESS OF THE BACKFILL MATERIAL.
3. ZURN INTERCEPTORS MUST BE INSTALLED IN ACCORDANCE WITH ALL RELEVANT FEDERAL, PROVINCIAL/STATE, AND LOCAL CODES INCLUDING LOCAL PLUMBING CODE
4. UNIT MUST BE INSTALLED WITH PROVIDED FLOW CONTROL
5. STANDARD BURIAL DEPTH IS 3 FEET WITH SUPPLIED EXTENSION COLLARS. FOR BURIAL DEPTH UP TO 6 FEET MAXIMUM, ADDITIONAL 3 FEET LONG EXTENSION COLLAR COUPLINGS (PART Z1SXH EXT B) MAY BE PURCHASED. BURIAL DEPTH NOT TO EXCEED 6 FEET TOTAL
6. ZURN GREENTURTLE RECOMMENDS THE INSTALLATION OF THE ANCHORING SLAB TO SECURE TANK DURING INSTALLATION. CAST IN PLACE ANCHORING SLAB TO USE AT LEAST 3000PSI CONCRETE POURED ALL AROUND TANK. APPROXIMATELY 16CU FT NEEDED
7. IF ANCHORING SLAB IS NOT INSTALLED IT IS THE INSTALLERS RESPONSIBILITY TO ENSURE THE TANK IS SECURED AND WILL NOT SHIFT OR MOVE DURING INSTALLATION
8. BACKFILL MATERIAL TO BE 3/4" PEA GRAVEL (ALTERNATIVE TO BE 3/4" CRUSHED STONE - SHALL BE COMPACTED TO 98% SPD)
9. VENTS TO BE CONNECTED TO VENTING SYSTEM, AS PER LOCAL CODES
10. CLEANOUTS TO BE CAPPED IN FIELD, AS PER LOCAL CODES
11. IF THE GROUND WATER TABLE IS MORE THAN ONE FOOT HIGHER THAN THE BOTTOM OF THE TANK, A CUSTOM DESIGN TANK AND PROPER ANTI BUOYANCY SLAB SHOULD BE USED. PLEASE CONTACT GT FOR MORE INFORMATION.n

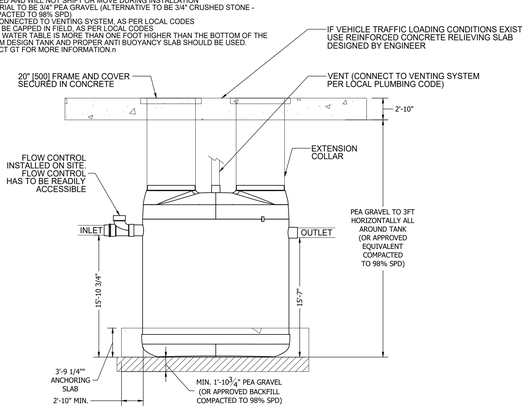


MUST BE INSTALLED WITH SUPPLIED FLOW CONTROL DEVICE AS TESTED AND AS SHOWN IN THE DRAWING

NOTES:

1. FOR HYDROMECHANICAL APPLICATIONS ONLY.
2. ALL PROCEPTOR UNITS ARE MANUFACTURED WITH FIBERGLASS REINFORCED PLASTICS. PHYSICAL CHARACTERISTICS AND THICKNESS: POLYESTER RESIN AND E GLASS MINIMUM THICKNESS ¼" WALL AND ¾" TOP AND BOTTOM BOWLS.
3. ALL PROCEPTOR UNITS ARE TO BE INSTALLED IN ACCORDANCE WITH THE MANUFACTURER'S INSTALLATION INSTRUCTION.
4. STANDARD PIPING IS SCH. 40 PVC.
5. EXTENSION COLLAR TO BE ORDERED TO MEET FINISHED GRADE. CUT ON SITE FOR FINAL ADJUSTMENT AND CAULKED WITH SIKAFLEX BY CONTRACTOR FOR WATERTIGHT SEAL.
6. COVERS AVAILABLE FOR H20 TRAFFIC LOADING, PEDESTRIAN LOADING OR ABOVE GROUND INSTALLATION.
7. CONSULT GREEN TURTLE FOR OTHER SIZES.
8. LIFE WARRANTY AGAINST LEAKS AND STRUCTURAL FAILURE DUE TO MANUFACTURING DEFECTS.

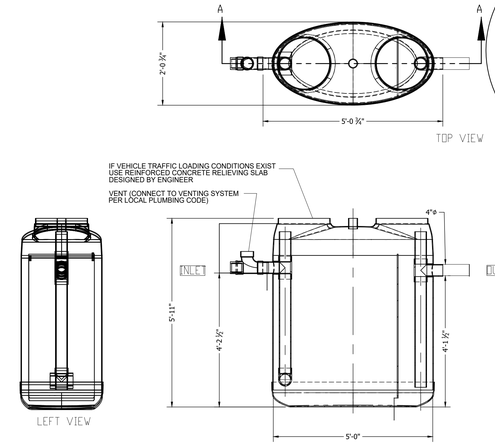


NOTES:

1. REFER TO INSTALLATION PROCEDURE & INSTALLATION CHECKLIST.
2. PROCEPTOR SEPARATORS MUST BE INSTALLED IN ACCORDANCE WITH ALL RELEVANT FEDERAL/STATE & LOCAL CODES INCLUDING LOCAL PLUMBING CODE.
3. US PATENT #5,746,912; CDN PATENT #2,195,822

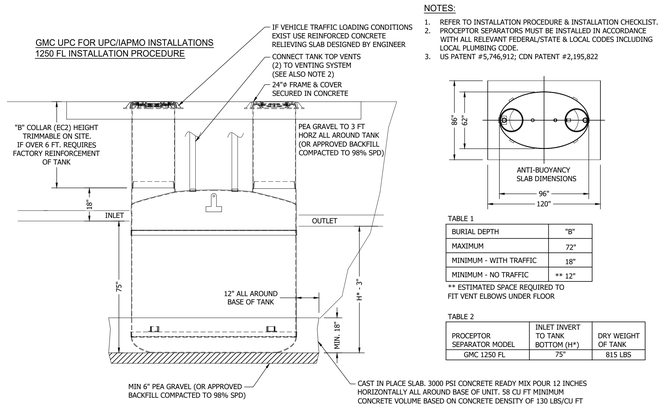





TABLE 1

| BURIAL DEPTH | "B" |
|---|---|
| MAXIMUM | 72" |
| MINIMUM - WITH TRAFFIC | 18" |
| MINIMUM - NO TRAFFIC | ** 12" |

** ESTIMATED SPACE REQUIRED TO FIT VENT ELBOWS UNDER FLOOR

TABLE 2

| PROCEPTOR SEPARATOR MODEL | INLET INVERT TO TANK BOTTOM (H*) | DRY WEIGHT OF TANK |
|---|---|---|
| GMC 1250 FL | 75" | 815 LBS |

## GREASE INTERCEPTOR DETAIL

NOT TO SCALE

NOTES:

1. FOR GRAVITY APPLICATIONS ONLY.
2. ALL PROCEPTOR UNITS ARE MANUFACTURED WITH FIBERGLASS REINFORCED PLASTICS. PHYSICAL CHARACTERISTICS & THICKNESS: POLYESTER RESIN & E GLASS MINIMUM THICKNESS 1/4" WALL & 3/8" TOP & BOTTOM BOWLS.
3. ALL PROCEPTOR UNITS ARE TO BE INSTALLED IN ACCORDANCE WITH THE MANUFACTURERS INSTALLATION INSTRUCTIONS.
4. STANDARD PIPING IS SCH. 40 PVC.
5. GMC/OMC - 3000 UNITS COME STANDARD WITH 4" INLET & OUTLET (OTHER PIPE SIZE OPTIONS AVAILABLE UPON REQUEST).
6. EXTENSION COLLAR TO BE ORDERED TO MEET FINISHED GRADE, CUT ON SITE FOR FINAL ADJUSTMENT & CAULKED WITH SIKAFLEX BY CONTRACTOR FOR WATERTIGHT SEAL.
7. COVERS AVAILABLE FOR H20 TRAFFIC LOADING, PEDESTRIAN LOADING OR ABOVE GROUND INSTALLATION.
8. CONSULT GREEN TURTLE FOR OTHER SIZES.
9. 30 YEAR WARRANTY AGAINST LEAKS & STRUCTURAL FAILURE.
10. US PATENT #5,746,912; CDN PATENT #2,195,822

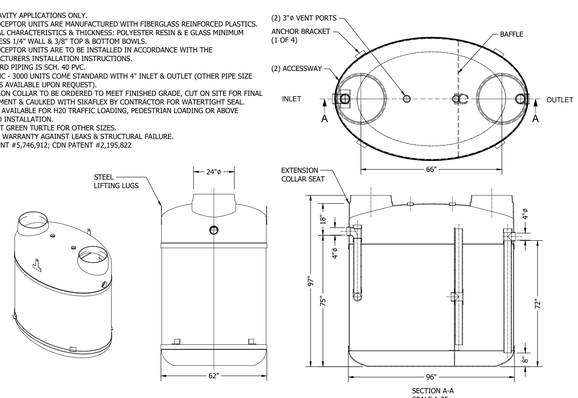


## GREASE INTERCEPTOR DETAIL

NOT TO SCALE

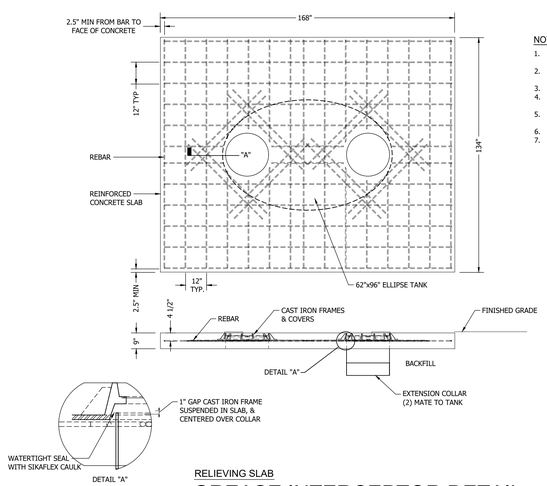


NOTES:

1. CONCRETE TO BE 28 DAY COMPRESSIVE STRENGTH TO 4000 PSI.
2. NO. 4 REBAR (1/2"ø) GRADE 60 STEEL PER ASTM A615; CONNECTED WITH TIE WIRE.
3. REBAR TO BE 2 1/2" FROM FACE OF CONCRETE.
4. REBAR SPACING 12" GRID, 4" SPACING AROUND ACCESS OPENINGS.
5. ALL PENETRATIONS TO BE SLEEVED OR HAVE SLIP CONNECTIONS.
6. MINIMUM 18" FROM TOP OF SLAB TO TOP OF TANK.
7. EXTEND COMPACTED BACKFILL A MINIMUM 3'-0" BEYOND ALL SIDES OF TANK.

| TANK MODEL |
|---|
| GMC 1250 FL |

RELIEVING SLAB

## GREASE INTERCEPTOR DETAIL

NOT TO SCALE

ALABAMA REGISTERED
No. 15067
PROFESSIONAL
3/18/2021
ENGINEER
J.K. MIMS

NOLA VANPEURSEM
ARCHITECTS, PC
MEMBERS OF THE AMERICAN INSTITUTE OF ARCHITECTS
301 JEFFERSON STREET
HUNTSVILLE, ALABAMA 35801
(256) 533-6617
NVPARCHITECTS.COM

THIS DRAWING MAY NOT BE REPRODUCED IN WHOLE OR IN PART WITHOUT THE CONSENT OF NOLA|VANPEURSEM ARCHITECTS

ALABAMA A&M UNIVERSITY

# WELCOME CENTER

4900 MERIDIAN ST.
HUNTSVILLE, ALABAMA

JOB NUMBER
18994

| TS | JKM | 01/25/2021 |
|---|---|---|
| DRAWN | CHECKED | DATE |

REVISIONS

| No. | Description | Date |
|---|---|---|
| 1 | ADDENDUM 2 | 03/05/2021 |
| 2 | ADDENDUM 3 | 03/18/2021 |

SHEET TITLE
**GREASE TANK DETAILS**

SHEET NUMBER
P-2.5
OF
9

MIMS ENGINEERING INC.
CONSULTING ENGINEERS
112 SOUTH SIDE SQUARE, SUITE B
HUNTSVILLE, AL. 35801
PHONE: (256) 489-0777
FAX: (256) 489-0778
WWW.MIMSENGINEERING.COM

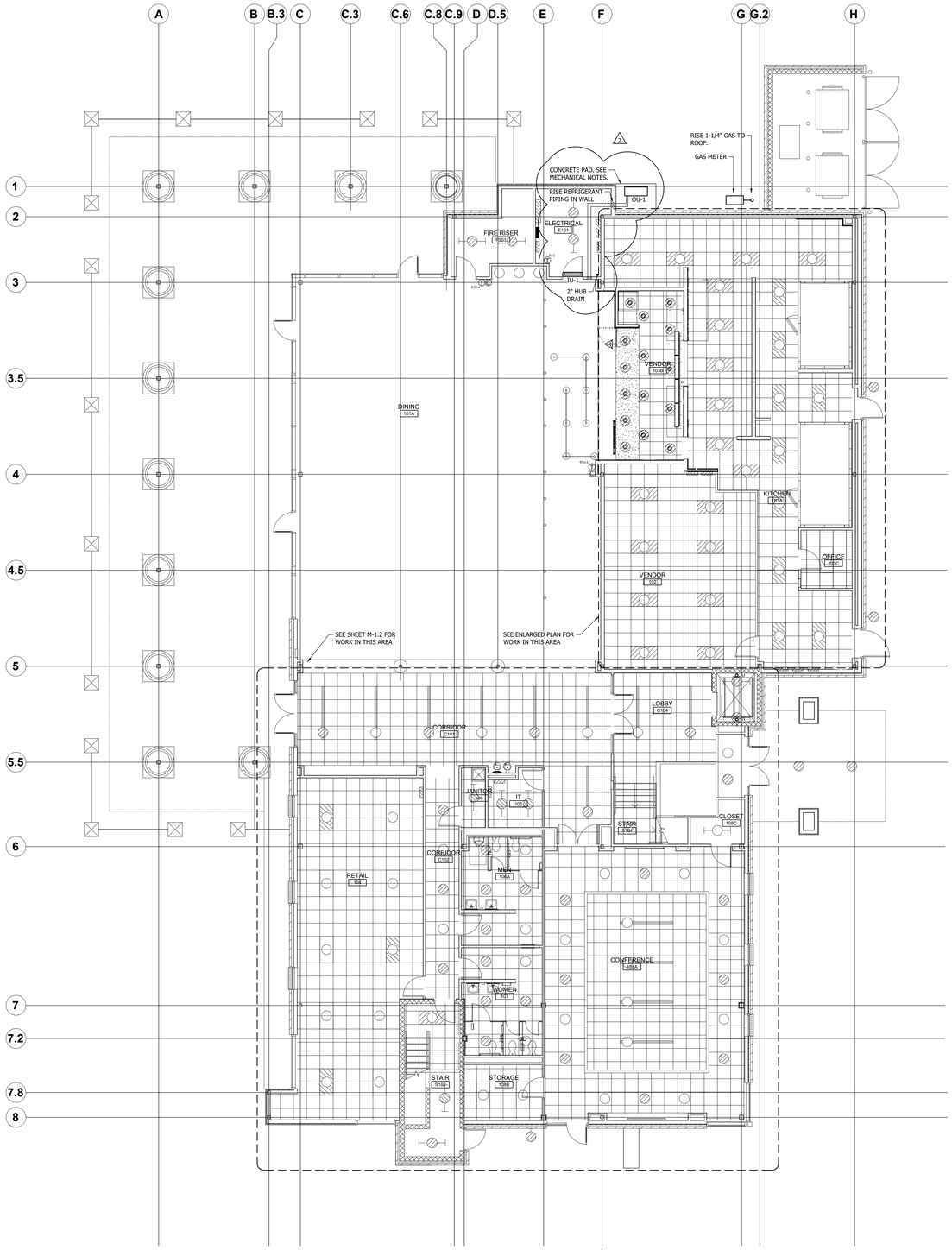


FIRST FLOOR
## MECHANICAL FLOOR PLAN
SCALE: 1/8" = 1'-0"

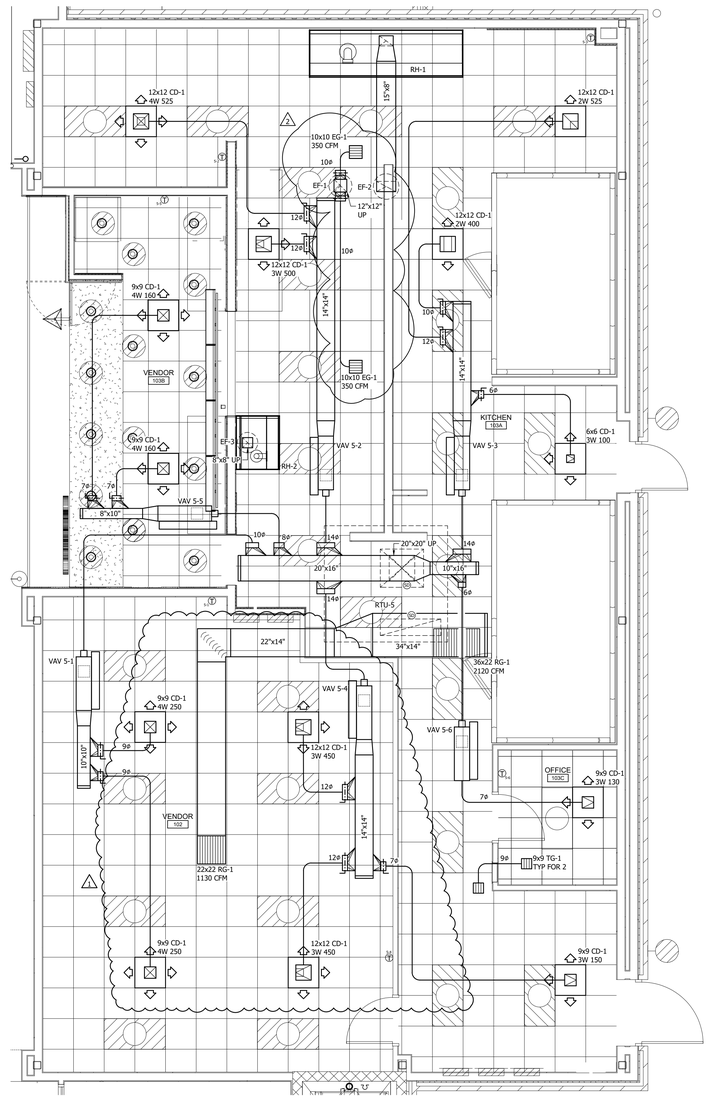


KITCHEN
## MECHANICAL FLOOR PLAN
SCALE: 1/4" = 1'-0"

ALABAMA REGISTERED
No. 15067
PROFESSIONAL
3/18/2021
ENGINEER
J.K. MIMS

NOLA VANPEURSEM
ARCHITECTS, PC
MEMBERS OF THE AMERICAN INSTITUTE OF ARCHITECTS
301 JEFFERSON STREET
HUNTSVILLE, ALABAMA 35801
(256) 533-6617
NVPARCHITECTS.COM

THIS DRAWING MAY NOT BE REPRODUCED IN WHOLE OR IN PART WITHOUT THE CONSENT OF NOLA|VANPEURSEM ARCHITECTS

ALABAMA A&M UNIVERSITY
# WELCOME CENTER
4900 MERIDIAN ST.
HUNTSVILLE, ALABAMA

JOB NUMBER
18994

TS / JKM / 01/25/2021
DRAWN - CHECKED - DATE

REVISIONS

| No. | Description | Date |
|---|---|---|
| 1 | ADDENDUM 2 | 03/05/2021 |
| 2 | ADDENDUM 3 | 03/18/2021 |

SHEET TITLE
**MECHANICAL FLOOR PLAN - FIRST FLOOR**

SHEET NUMBER
M-1.1
OF
8

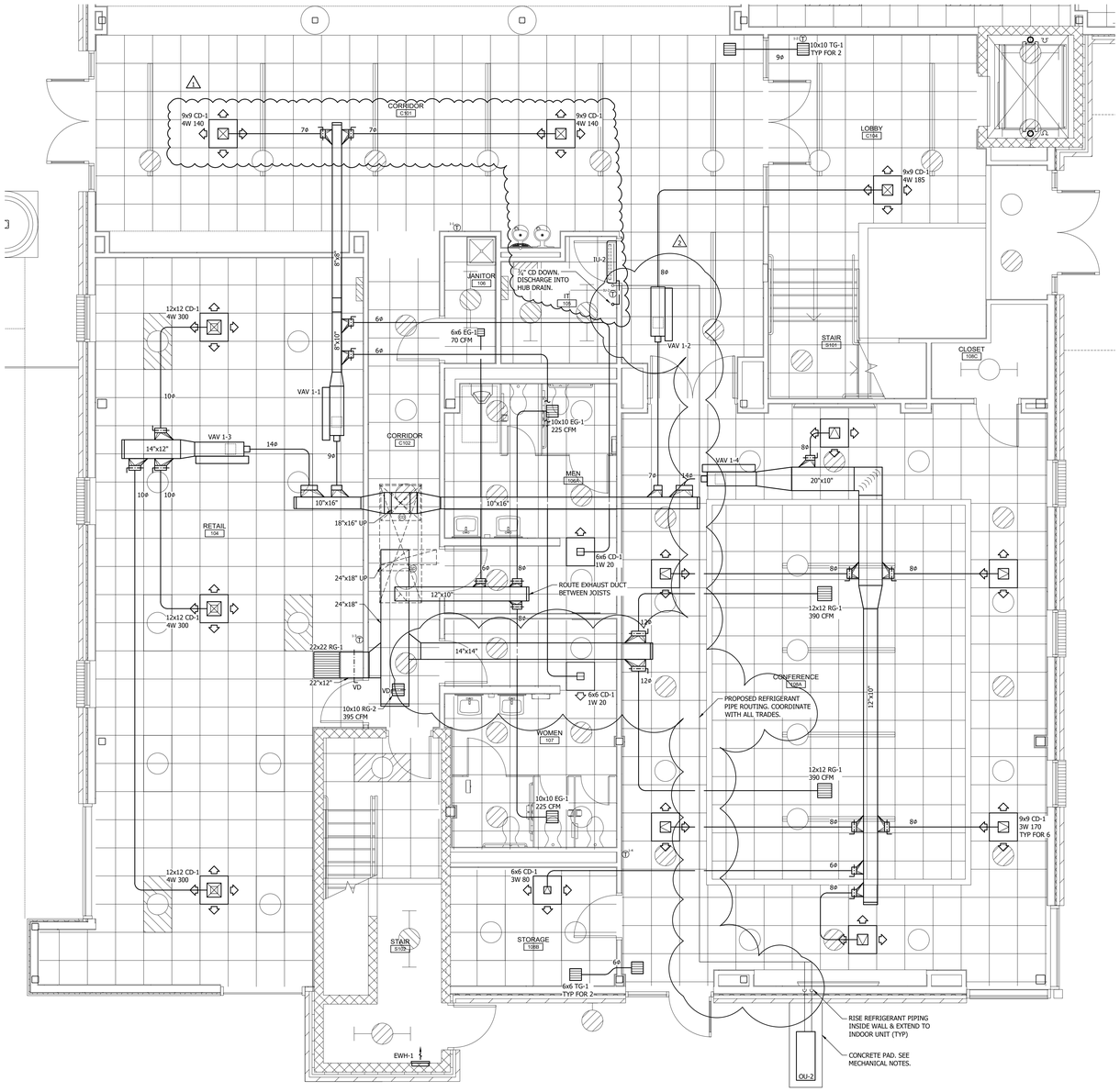


FIRST FLOOR

## MECHANICAL FLOOR PLAN

SCALE: 1/4" = 1'-0"

MIMS ENGINEERING INC.
CONSULTING ENGINEERS
112 SOUTH SIDE SQUARE, SUITE B
HUNTSVILLE, AL. 35801
PHONE: (256) 489-0747
FAX: (256) 489-0748
WWW.MIMSENGINEERING.COM

ALABAMA REGISTERED
No. 15067
PROFESSIONAL
3/18/2021
ENGINEER
J.K. MIMS

NOLA VANPEURSEM
ARCHITECTS, PC
MEMBERS OF THE AMERICAN INSTITUTE OF ARCHITECTS
301 JEFFERSON STREET
HUNTSVILLE, ALABAMA 35801
(256) 533-6617
NVPARCHITECTS.COM

THIS DRAWING MAY NOT BE REPRODUCED IN WHOLE OR IN PART WITHOUT THE CONSENT OF NOLA|VANPEURSEM ARCHITECTS

ALABAMA A&M UNIVERSITY

# WELCOME CENTER

4900 MERIDIAN ST.
HUNTSVILLE, ALABAMA

JOB NUMBER
18994

TS / JKM / 01/25/2021
DRAWN - CHECKED - DATE

REVISIONS

| No. | Description | Date |
|---|---|---|
| 1 | ADDENDUM 2 | 03/05/2021 |
| 2 | ADDENDUM 3 | 03/18/2021 |

SHEET TITLE
**MECHANICAL FLOOR PLAN - FIRST FLOOR**

SHEET NUMBER
M-1.2
OF
8

## RTU SCHEDULE (DX / GAS)

| Mark | RTU-1 | RTU-2 | RTU-3 | RTU-4 | RTU-5 |
|---|---|---|---|---|---|
| Location | Roof | Roof | Roof | Roof | Roof |
| Serving | First Floor Retail, Conference | Second Floor Offices | Dining | Dining | Kitchen, Vendor Serving |
| Fan | | | | | |
| Drive Type | Variable Direct Drive | Variable Direct Drive | Variable Direct Drive | Variable Direct Drive | Variable Direct Drive |
| Motor Type | ECM | ECM | ECM | ECM | Premium Efficiency |
| Supply Air, CFM | 2500 | 4450 | 4000 | 4000 | 4050 |
| Outside Air, CFM | 650 | 590 | 1200 | 1200 | 650 |
| Ext. S.P., In. W.G. | 2.5 | 2.5 | 1 | 1 | 1.5 |
| Total S.P. In. W.G. | 2.9 | 3.2 | 2.2 | 2.2 | 2.1 |
| HP | 4 | 8 | 4 | 4 | 4 |
| BHP | 1.72 | 3.48 | 1.58 | 1.58 | 2.14 |
| RPM | VFD Variable | VFD Variable | VFD Variable | VFD Variable | VFD Variable |
| Motor Heat, MBH | 5.39 | 10.89 | 5 | 5 | 6.4 |
| Cooling | | | | | |
| EER/SEER | 12.1 | 11.2 | 12.1 | 12.1 | 11.2 |
| IEER | 19.8 | 17.6 | 17.6 | 17.6 | 17.6 |
| Capacity Control | Modulating Control With Inverter Scroll | Modulating Control With Inverter Scroll | Modulating Control With Inverter Scroll | Modulating Control With Inverter Scroll | Modulating Control With Inverter Scroll |
| Inverter Duty Compressors, Number | 2 | 2 | 2 | 2 | 2 |
| Total Capacity, MBH | 89.58 | 142.42 | 149.71 | 149.71 | 149.89 |
| Sensible Capacity, MBH | 71.36 | 119.67 | 109.41 | 109.41 | 109.85 |
| Moisture Removal, Lbs./hr. | 15.6 | 19.6 | 34.6 | 34.6 | 34.4 |
| EAT FDB/FWB, Deg. F | 80 / 67 | 77.0 / 63.2 | 80 / 67 | 80 / 67 | 80 / 67 |
| LAT FDB/FWB, Deg. F | 53.3 / 53.2 | 52.0 / 51.9 | 55.0 / 55.0 | 55.0 / 55.0 | 55.1 / 55.0 |
| Leaving Unit FDB/FWB, Deg. F | 55.3 / 53.9 | 54.3 / 52.7 | 56.2 / 55.3 | 56.2 / 55.3 | 56.6 / 55.5 |
| Coil Air Pressure Drop. In. W.G. | 0.11 | 0.28 | 0.26 | 0.26 | .26 |
| Coil Type | DX Cooling | DX Cooling | DX Cooling | DX Cooling | DX Cooling |
| Rows / FPI | 3 / 15 | 4 / 15 | 4 / 15 | 4 / 15 | 4 / 15 |
| Face Velocity | 176.9 | 283.2 | 259.2 | 259.2 | 261.2 |
| Leaving Dew Point, Deg. F | 53.2 | 51.9 | 54.9 | 54.9 | 55.0 |
| Heating (Indirect Fired) | | | | | |
| Fuel | Natural Gas | Natural Gas | Natural Gas | Natural Gas | Natural Gas |
| Input, MBH | 200 | 200 | 200 | 200 | 300 |
| Output, MBH | 160 | 160 | 160 | 160 | 240 |
| Heat Exchanger | Stainless Steel | Stainless Steel | Stainless Steel | Stainless Steel | Stainless Steel |
| Gas Heat, Modulating Turndown | 10:1 | 10:1 | 10:1 Turndown | 10:1 Turndown | 10:1 Turndown |
| Winter | | | | | |
| EAT, Deg. F | 50 | 50 | 50 | 50 | 50.0 |
| LAT, Deg F | 109.5 | 109.5 | 86.9 | 86.9 | 104.9 |
| Condenser Hot Gas Reheat | | | | | Modulating HGRH |
| Compressors | Modulating Inverter Compressor | Modulating Inverter Compressor | Modulating Inverter Compressor | Modulating Inverter Compressor | Modulating Inverter Compressor |
| Total Capacity, MBH | 44.97 | 85.55 | 65.15 | 65.15 | 65.3 |
| LAT FDB/FWB, Deg. F | 70.0 / 59.5 | 70.0 / 58.9 | 70.0 / 60.5 | 70.0 / 60.5 | 70.0 / 60.5 |
| Filters | | | | | |
| Quantity | 6 | 6 | 6 | 6 | 6 |
| Size | 18" x 24" x 2" | 18" x 24" x 2" | 18" x 24" x 2" | 18" x 24" x 2" | 18" x 24" x 2 |
| Type | MERV 8 | MERV 8 | MERV 8 | MERV 8 | MERV 8 |
| Outdoor Fan | | | | | |
| Drive Type | Variable Direct Propeller | Variable Direct Propeller | Variable Direct Propeller | Variable Direct Propeller | Variable Direct Propeller |
| Type | Head Pressure Control | Head Pressure Control | Head Pressure Control | Head Pressure Control | Head Pressure Control |
| Volt/Phase | 208/3/60 | 208/3/60 | 208/3/60 | 208/3/60 | 208/3/60 |
| FLA | 34.7 | 51.4 | 46.7 | 46.7 | 46.7 |
| MCA | 3737 | 55.8 | 51.1 | 51.1 | 51.1 |
| MOCP | 45 | 70 | 60 | 60 | 60 |
| Basis of Design | | | | | |
| Manufacturer | Daikin | Daikin | Daikin | Daikin | Daikin |
| Model No. | DPS007A | DPS012A | DPS012A | DPS012A | DPS012A |
| Unit Weight, lbs. | 2300 | 2600 | 2600 | 2600 | 2500 |
| Accessories | As listed | As listed | As listed | As listed | As Listed |
| Notes | A | A | A | A | A |

Accessories:
1. Unit shall be mounted on a steel frame provided by others. See Mechanical Notes.
2. Condenser shall be air cooled with variable speed head pressure control.
3. Provide non-fused disconnect switch with unit powered 115 volt convenience outlet.
4. Provide hail guards.
5. Provide 5 year parts and labor compressors. Provide 10 year warranty on the heat exchanger.
6. Provide double wall construction.
7. Provide stainless steel drip pan.
8. Provide discharge air sensor.
9. Provide single point power connection.
10. Provide inverter duty rated fan with factory mounted VFD and shaft grounding rings.
11. Provide economizer with enthalpy control and barometric relief.
12. Provide CO2 Space Mounted Sensor and Controls
13 Provide a bipolar ionization system in each unit. The unit shall be factory mounted. See separate schedule for the requirements.

2

Notes:
A. Refer to the Sequence of Control and Control Monitoring Points for control functions that need to be provided with the equipment.

2

## EXHAUST FAN SCHEDULE

| Mark | EF-1 | EF-2 | EF-3 | EF-4 |
|---|---|---|---|---|
| Location | Roof | Roof | Roof | Roof |
| Serving | Kitchen Area Exhaust | Range Hood No. 1 | Range Hood No. 2 | Main Toilet Exhaust |
| Fan Type | Centrifugal Downblast | Centrifugal Upblast | Centrifugal Upblast | Centrifugal Downblase |
| Blade Type | Backward Inclined All Aluminum Wheel | Backward Inclined All Aluminum Wheel | Backward Inclined All Aluminum Wheel | Backward Inclined All Aluminum Wheel |
| Drive | Direct | Direct | Direct | Direct |
| CFM | 700 | 1350 | 701 | 745 |
| Motor | Open EC Vari-Flow | Open EC Vari-Flow | Open EC Vari-Flow | Open EC Vari-Flow |
| HP | .125 | .5 | .33 | .33 |
| BHP | .057 | .358 | .188 | .137 |
| Static Pressure, In WC | .25 | .75 | .75 | .5 |
| RPM | 1445 | 1709 | 1841 | 1681 |
| Sones | 8.2 | 16.1 | 11.6 | 10.0 |
| Volt/Phase | 208/1/60 | 208/1/60 | 208/1/60 | 208/1/60 |
| RLA | 1.4 | 3.8 | 2.5 | 2.5 |
| Basis of Design | | | | |
| Manufacturer | Cook | Cook | Cook | Cook |
| Series | ACE-D VF | VCR-D VF | VCR-D VF | ACE-D VF |
| Model | 101C17D VF | 120V17D VF | 101V28D VF | 101C28D VF |
| Weight | 125 | 200 | 200 | 125 |
| Accessories | As Listed | As Listed | As Listed | As Listed |
| Notes | As Listed | As Listed | As Listed | As Listed |

EF-1 & EF-2 Accessories:
1 Provide factory mounted and wired NEMA 3 service disconnect
2 Provide factory mounted and wired fan speed controller
3 Provide model BD-14 backdraft damper
4 Provide stainless steel bird screen
5 Provide stainless steel hardware
6 Provide factory fabricated 18" high roof curb less nailer. Curb and fan shall be IBC 1609 Wind Load compliant. Submit factory engineered drawings for the installation requirements.
7 Fan and curb to have Lorenized finish to match colc

EF 2 & EF-3 Accessories
1 Provide factory mounted and wired NEMA 3 service disconnect
2 Provide factory mounted and wired fan speed controller
3 Provide a welded drain coupling
4 Provide a grease terminator
5 Provide stainless steel hardware
6 Provide a ventilated curb extension. EF-2 shall be VE-19, EF-3 shall be VF-17
7 Provide a hinged top cap with locking clasp
8 Provide factory fabricated 18" high roof curb less nailer. Curb and fan shall be IBC 1609 Wind Load compliant. Submit factory engineered drawings for the installation requirements.

Notes
A Exhaust Fans shall be controlled by light switch in

## AtmosAir Active Bi Polar Ionization Schedule

| Design Parameters | | | | AtmosAir Systems | | | | Electrical | | | |
|---|---|---|---|---|---|---|---|---|---|---|---|
| CODE | TAG | SERVICE | Supply CFM | AtmosAir Model | Unit Qty | Tube Qty Per Unit | Total Tubes Per Air Unit | Tube Size | V | HZ | AMPS/unit |
| BPI-1 | RTU-1 | First Floor Retail | 2,500 | Matterhorn 1002 | 1 | 2 | 2 | E | 115 | 60 | 0.6 |
| BPI-2 | RTU-2 | Second Floor Offices | 4,450 | Matterhorn 1002 | 1 | 2 | 2 | F | 115 | 60 | 0.6 |
| BPI-3 | RTU-3 | Dining | 4,000 | Matterhorn 1002 | 1 | 2 | 2 | F | 115 | 60 | 0.6 |
| BPI-4 | RTU-4 | Dining | 4,000 | Matterhorn 1002 | 1 | 2 | 2 | F | 115 | 60 | 0.6 |
| BPI-5 | RTU-5 | Kitchen | 4,050 | Matterhorn 1002 | 2 | 2 | 4 | E | 115 | 60 | 0.6 |

Options:
A. Provide the air pressure switch and mounting bracket.
B. Air pressure switch to be interlocked with the unit fan operation.
C. System shall be factory mounted.

2

1

## DUCTLESS SPLIT SYSTEM SCHEDULE

| Serving | Electrical E101 | IT 105 |
|---|---|---|
| Indoor Unit | Wall | Wall |
| Outdoor Unit | North Grade | South Grade |
| System | | |
| Nominal Tonnage | 2 Ton | 2 Ton |
| SEER | 19 | 19 |
| Total Cooling Capacity at ARI, MBH | 21.2 | 21.2 |
| Minimum Capacity at ARI, MBH | 5.5 | 5.5 |
| Heat Pump Capacity at 47° F | - | - |
| Heat Pump Capacity at 17° F | - | - |
| Refrigerant Pipe Length (Max) | 98 | 98 |
| Refrigerant Pipe Height Difference (Max) | 65 | 65 |
| Indoor Unit | | |
| Mark | IU-1 | IU-2 |
| Supply Fan | | |
| Supply Air, CFM (Wet Coil) | 716 | 716 |
| FLA/MCA | - | - |
| Volt/Phase | - | - |
| Basis of Design, Manufacturer | Daikin | Daikin |
| Model | FTK24AXVJU | FTK24AXVJU |
| Weight (lbs.) | 31 | 31 |
| Outdoor Unit | | |
| Mark | OU-1 | OU-2 |
| Volt/Phase | 208/1/60 | 208/1/60 |
| MCA | 13.4 | 13.4 |
| MOCP | 20 | 20 |
| Basis of Design, Manufacturer | Daikin | Daikin |
| Model | RK24AXVJU | RK24AXVJU |
| Weight (lbs.) | 106 | 106 |
| Options | 1, 2, 3 | 1, 2, 3 |
| Notes | A, B, C | A, B, C |

Options:
1. Provide low ambient controls, wind baffle, and condensate pump. When floor drain / hub drain is provided, pump is not required.
2. Provide hard wired wall mounted thermostat.

Notes:
A. Indoor unit receives power from outdoor unit thru field supplied interconnecting wiring.
B See Sequence of Control & Control Monitoring Points
C Daikin has been specified to establish quality. See Specifications for equals.

## VAV BOX SCHEDULE

| Unit | Mark | Serving | Cooling: Sensible MBH | Cooling: Design CFM | Cooling: Min CFM | Cooling: Max CFM | Heating: MBH | Heating: CFM | Heating: EAT, Deg F. | Heating: LAT, Deg F. | Heating: KW Heat | Heating: S.P. Drop | Heating: Stages Heat | Heating: Volt/Phase | MCA | MOCP | Manufacturer | Model | Accessories | Notes |
|---|---|---|---|---|---|---|---|---|---|---|---|---|---|---|---|---|---|---|---|---|
| RTU-1 | VAV 1-1 | Corridor C101, C102, Main Toilets | 5.8 | 315 | 120 | 400 | 4.7 | 315 | 55 | 91.4 | 4.4 | 0.038 | 2-10 VDC SCR | 208/1/60 | 26.4 | 30.0 | Daikin | MQTH-508 | As Listed | A |
| | VAV 1-2 | Lobby C104 | 3.1 | 185 | 90 | 400 | 3.8 | 185 | 55 | 91.7 | 2.4 | 0.104 | 2-10 VDC SCR | 208/1/60 | 14.4 | 15.0 | Daikin | MQTH-506 | As Listed | A |
| | VAV 1-3 | Retail 104 | 15.6 | 900 | 330 | 1,600 | 14.0 | 900 | 55 | 92.9 | 13.0 | 0.011 | 2-10 VDC SCR | 208/3/60 | 45.1 | 50.0 | Daikin | MQTH-510 | As Listed | A |
| | VAV 1-4 | Conference 108A, Storage, Closet | 18.7 | 1100 | 390 | 1,600 | 16.0 | 1080 | 55 | 90.7 | 15.0 | 0.080 | 2-10 VDC SCR | 208/3/60 | 52.0 | 55.0 | Daikin | MQTH-512 | As Listed | A |
| | | | 2480 | 2500 | | | | | | | | | | | | | | | | |
| RTU-2 | VAV 2-1 | Lobby C201, Reception 201 | 6.2 | 360 | 120 | 700 | 5.0 | 360 | 55 | 91.4 | 5.0 | 0.090 | 2-10 VDC SCR | 208/1/60 | 30.0 | 35.0 | Daikin | MQTH-508 | As Listed | A |
| | VAV 2-2 | Conference 202 | 5.0 | 340 | 120 | 400 | 5.0 | 365 | 55 | 91.0 | 4.0 | 0.104 | 2-10 VDC SCR | 208/1/60 | 24.0 | 25.0 | Daikin | MQTH-506 | As Listed | A |
| | VAV 2-3 | Director 203 | 4.5 | 280 | 70 | 400 | 2.9 | 255 | 55 | 91.7 | 3.6 | 0.104 | 2-10 VDC SCR | 208/1/60 | 21.6 | 25.0 | Daikin | MQTH-506 | As Listed | A |
| | VAV 2-4 | Recruiter 204 | 3.7 | 215 | 60 | 400 | 2.3 | 215 | 55 | 89.9 | 2.8 | 0.104 | 2-10 VDC SCR | 208/1/60 | 16.8 | 20.0 | Daikin | MQTH-506 | As Listed | A |
| | VAV 2-5 | Recruiter 205 | 3.7 | 215 | 60 | 400 | 2.3 | 215 | 55 | 89.9 | 2.8 | 0.104 | 2-10 VDC SCR | 208/1/60 | 16.8 | 20.0 | Daikin | MQTH-506 | As Listed | A |
| | VAV 2-6 | Recruiter 206 | 3.7 | 215 | 60 | 400 | 2.3 | 215 | 55 | 89.9 | 2.8 | 0.104 | 2-10 VDC SCR | 208/1/60 | 16.8 | 20.0 | Daikin | MQTH-506 | As Listed | A |
| | VAV 2-7 | Recruiter 207 | 3.7 | 215 | 60 | 400 | 2.3 | 215 | 55 | 89.9 | 2.8 | 0.104 | 2-10 VDC SCR | 208/1/60 | 16.8 | 20.0 | Daikin | MQTH-506 | As Listed | A |
| | VAV 2-8 | Asst. Director 208A | 5.3 | 300 | 110 | 400 | 4.7 | 300 | 55 | 91.7 | 4.2 | 0.038 | 2-10 VDC SCR | 208/1/60 | 25.2 | 30.0 | Daikin | MQTH-508 | As Listed | A |
| | VAV 2-9 | Recruiter 209 | 3.5 | 200 | 60 | 400 | 2.3 | 200 | 55 | 91.4 | 2.8 | 0.104 | 2-10 VDC SCR | 208/1/60 | 16.8 | 20.0 | Daikin | MQTH-506 | As Listed | A |
| | VAV 2-10 | Recruiter 210 | 3.5 | 200 | 60 | 400 | 2.3 | 200 | 55 | 91.4 | 2.8 | 0.104 | 2-10 VDC SCR | 208/1/60 | 16.8 | 20.0 | Daikin | MQTH-506 | As Listed | A |
| | VAV 2-11 | Recruiter 211 | 3.5 | 200 | 60 | 400 | 2.3 | 200 | 55 | 91.4 | 2.8 | 0.104 | 2-10 VDC SCR | 208/1/60 | 16.8 | 20.0 | Daikin | MQTH-506 | As Listed | A |
| | VAV 2-12 | Manager 212 | 5.6 | 320 | 150 | 400 | 6.2 | 235 | 55 | 90.4 | 4.4 | 0.038 | 2-10 VDC SCR | 208/3/60 | 15.3 | 20.0 | Daikin | MQTH-508 | As Listed | A |
| | VAV 2-13 | Recruiter 213 | 3.1 | 180 | 60 | 400 | 2.3 | 180 | 55 | 89.9 | 2.4 | 0.104 | 2-10 VDC SCR | 208/1/60 | 14.4 | 15.0 | Daikin | MQTH-506 | As Listed | A |
| | VAV 2-14 | Student Aids 214 | 4.2 | 240 | 70 | 400 | 2.9 | 240 | 55 | 89.9 | 3.2 | 0.104 | 2-10 VDC SCR | 208/1/60 | 19.2 | 20.0 | Daikin | MQTH-506 | As Listed | A |
| | VAV 2-15 | Office 215, Break 219 | 9.6 | 560 | 115 | 700 | 4.8 | 555 | 55 | 90.3 | 7.5 | 0.090 | 2-10 VDC SCR | 208/1/60 | 45.1 | 50.0 | Daikin | MQTH-508 | As Listed | A |
| | VAV 2-16 | Corridors C202, 203, 204, Toilets | 3.9 | 230 | 65 | 400 | 2.7 | 230 | 55 | 91.2 | 3.2 | 0.104 | 2-10 VDC SCR | 208/1/60 | 19.2 | 20.0 | Daikin | MQTH-506 | As Listed | A |
| | VAV 2-17 | Files 220, Workroom 221 | 3.1 | 180 | 60 | 400 | 2.3 | 180 | 55 | 89.9 | 2.4 | 0.104 | 2-10 VDC SCR | 208/1/60 | 14.4 | 15.0 | Daikin | MQTH-506 | As Listed | A |
| | | | 4370 | 4450 | | | | | | | | | | | | | | | | |
| RTU-5 | VAV 5-1 | Future Vendor 102 | 8.3 | 500 | 150 | 700 | 4.7 | 500 | 55 | 91.7 | 6.0 | 0.090 | 2-10 VDC SCR | 208/1/60 | 36.1 | 40.0 | Daikin | MQTH-508 | As Listed | A |
| | VAV 5-2 | Kitchen 103A North West | 18.1 | 1025 | 400 | 1,250 | 6.2 | 1025 | 55 | 90.8 | 12.0 | 0.052 | 2-10 VDC SCR | 208/3/60 | 41.6 | 45.0 | Daikin | MQTH-510 | As Listed | A |
| | VAV 5-3 | Kitchen 103A North East | 18.1 | 1025 | 400 | 1,250 | 6.2 | 1025 | 55 | 90.8 | 12.0 | 0.052 | 2-10 VDC SCR | 208/3/60 | 41.6 | 45.0 | Daikin | MQTH-510 | As Listed | A |
| | VAV 5-4 | Future Kitchen 103A South | 18 | 1050 | 400 | 1,600 | 6.1 | 1050 | 55 | 92.9 | 13.0 | 0.011 | 2-10 VDC SCR | 208/3/60 | 45.1 | 50.0 | Daikin | MQTH-510 | As Listed | A |
| | VAV 5-5 | Vendor 103B | 5.5 | 320 | 120 | 400 | 3.2 | 320 | 55 | 91.3 | 3.8 | 0.104 | 2-10 VDC SCR | 208/1/60 | 22.8 | 25.0 | Daikin | MQTH-506 | As Listed | A |
| | VAV 5-6 | Office 103C | 1.8 | 130 | 60 | 200 | 0.8 | 130 | 55 | 92.6 | 1.6 | 0.038 | 2-10 VDC SCR | 208/1/60 | 9.6 | 15.0 | Daikin | MQTH-504 | As Listed | A |
| | | | | 4050 | 1530 | | 27 | | | | | | | | | | | | | |

Accessories:
1. Provide factory mounted disconnects with fuse power.
2. Provide 208/24 volt transformers.
3. Provide double wall construction with 1" insulation.
4. Provide hard wired controls.

Notes:
A. See Sequence of Control and Control Monitoring Points

1

## GRILLE, REGISTER AND DIFFUSER SCHEDULE

| Mark | Description | Mounting | Material | Finish | Max NC Rating | Basis of Design: Manuf. | Basis of Design: Model | Accessories / Notes |
|---|---|---|---|---|---|---|---|---|
| SG-1 | Supply Grille Square Louvered Face Square Neck | Surface | Aluminum | See Note 6 | 30 | Titus | 301RL | Border Type 1 |
| CD-1 | Ceiling Diffuser Square Louvered Face Square Neck | Lay-In | Aluminum | See Architect | 30 | Titus | TDCA-AA | Border Type 3 |
| SD-1 | 6' Slot Diffuser (3) 1" Slot Adj. Pattern Controller | Suspend From Structure | Aluminum | See Architect | 30 | Titus | ML-39 | Flange Border w/ hangers End Borders Insulated Plenum w/ Duct Collar |
| SD-2 | 8' Slot Diffuser (3) 1" Slot Adj. Pattern Controller | Suspend From Structure | Aluminum | See Architect | 30 | Titus | ML-39 | Flange Border w/ hangers End Borders Insulated Plenum w/ Duct Collar |
| RG-1 | Return Grille Square Louvered Face Square Neck | Lay-in | Aluminum | See Architect | 30 | Titus | 350FL | Sq. to Rnd. Adaptor if Applicable Border Type 3 |
| EG-1 | Return Grille Square Louvered Face Square Neck | Surface | Aluminum | See Architect | 30 | Titus | 350FL | Border Type 1 |
| TG-1 | Transfer Grille Square Louvered Face Square Neck | Surface | Aluminum | See Architect | 30 | Titus | 301RL | Border Type 1 |

Notes:
1. Titus has been specified to establish the type and quality of air device to be installed. Equals by Price or Tuttle & Bailey will be considered.
2. Air devices that are ceiling cut-in type shall be centered in the tile or at the quarter points as indicated on the drawings.
3. Ceiling mounted louvered return grilles shall be installed with the blades pointed toward the closest wall so that the blades form a view block.
4. Wall mounted return grilles shall be installed with the blades pointing toward the floor or ceiling, whichever is nearest, so that the blades form a view block.
5. Internal portion of duct, including square to round adapter, attached to supply, return, exhaust and transfer grilles shall be blacked out with a dull finish, non-toxic, DTM paint.
6. Submit a color chart for the Architects selection of the device color.

## AIR BALANCE SUMMARY

| Unit | Area Served | Supply Air (CFM) | Return Air (CFM) | Outside Air (CFM) | General Exhaust | Hood Exhaust | Difference |
|---|---|---|---|---|---|---|---|
| RTU-1 | Retail / Conference | 2,500 | 1,850 | 650 | 520 | | + 130 |
| RTU-2 | 2nd Floor Offices | 4,450 | 3,860 | 590 | 220 | | + 370 |
| RTU-3 | Dining | 4,000 | 2,800 | 1,200 | - | | + 1200 |
| RTU-4 | Dining | 4,000 | 2,800 | 1,200 | - | | + 1200 |
| RTU-5 | Kitchen | 4,050 | 3,250 | 650 | 700 | | - 50 |
| Range Hood 1 & 2 | Kitchen Cooking | | | | | 2,050 | - 2,050 |
| Total OA = | | | | 4,290 | | | |
| Total EA = | | | | | 1,440 | 2,050 | |
| Total Combined EA = | | | | | 3,490 | | |
| **Pressure =** | | | | **4,290** | **3,490** | | **+ 800** |

2

MIMS ENGINEERING INC.
CONSULTING ENGINEERS
112 SOUTH SIDE SQUARE, SUITE B
HUNTSVILLE, AL. 35801
PHONE: (256) 881-4126
FAX: (256) 880-6743
WWW.MIMSENGINEERING.COM

ALABAMA REGISTERED
No. 15067
PROFESSIONAL
3/18/2021
ENGINEER
J.K. MIMS

NOLA VANPEURSEM
ARCHITECTS, PC
MEMBERS OF THE AMERICAN INSTITUTE OF ARCHITECTS
301 JEFFERSON STREET
HUNTSVILLE, ALABAMA 35801
(256) 533-6617
NVPARCHITECTS.COM

THIS DRAWING MAY NOT BE REPRODUCED IN WHOLE OR IN PART WITHOUT THE CONSENT OF NOLA|VANPEURSEM ARCHITECTS

ALABAMA A&M UNIVERSITY
**WELCOME CENTER**
4900 MERIDIAN ST
HUNTSVILLE, ALABAMA

JOB NUMBER
18994

TS / JKM / 01/25/2021
DRAWN - CHECKED - DATE

REVISIONS

| No. | Description | Date |
|---|---|---|
| 1 | ADDENDUM 2 | 03/05/2021 |
| 2 | ADDENDUM 3 | 03/18/2021 |

SHEET TITLE
**MECHANICAL SCHEDULES**

SHEET NUMBER
M-3.1
OF
8

## CONTROLS MONITORING POINT LIST

The following items shall be monitored in addition to those points required to control the systems in accordance with the Sequence of Control:

**General**
1. Outside Air Temperature
2. Outside Air Relative Humidity

**Roof Top Units with Variable Capacity Control**
1. Operating Status (Including Compressor & Heating Stages Enabled)
2. Fan Status (VFD % status)
3. Compressor Status
4. Entering Air Temperature
5. Leaving Air Temperature
6. Room Set Point
7. Room Temperature
8. Space Relative Humidity
9. Modulating gas valve position
10. Outside Air Damper Position
11. Outside Air Quantity (CFM)
12. Return Air Damper Position

**VAV Dampers**
1. Room Set Point
2. Room Temperature
3. Entering Air Temperature
4. Discharge Air Temperature
5. Zone Damper Position
6. Zone Air Flow Quantity (CFM)
6. Fully Modulating Electric Heat Status

**Ductless Split Systems**
1. Operating Status
2. Room Set Point
3. Room Temperature

**Range Hood Systems**
1. Exhaust Fan Status (via CT)
2. Fire Suppression Status

**Exhaust Fans (On / Off)**
1. Fan Status (via CT)

**Sump Pumps (Elevators)**
1. Pump Alarm Status (SP-1)

**Domestic Hot Water Systems**
1. Water Heater Discharge Temperature
2. Recirculation Loop Temperature
3. Recirculation Loop Pump Status (via CT)

**Walk-in Coolers & Freezers**
1. Internal Temperatures (Alarm)
2. Defrost cycle

### DX System Analysis Form

| | | | | |
|---|---|---|---|---|
| Project: | | | | |
| Date: | | | | |
| Architect: | | | | |
| Mechanical Contractor: | | | | |
| System Mark | | | | |
| System Model Number | | | | |
| System Serial Number | | | | |
| Heating Type | Heat Pump | Gas | Hot Water | Electric |
| Reheat Type | Hot Gas | Hot Water | Electric | N/A |
| Outdoor Temperature | | | | |
| Indoor Temperature | | | | |
| Indoor Relative Humidity | | | | |
| Mixed Air Temperature Entering Indoor Coil | | | | |
| Supply Air Temperature @ The Air handler | | | | |
| Supply Air Temperature @ The Farthest Supply Grille | | | | |
| Suction Pressure | | | | |
| Suction Line Temperature @ Compressor | | | | |
| Discharge Pressure | | | | |
| Discharge Line Temperature @ Compressor | | | | |
| Liquid Line Pressure | | | | |
| Liquid Line Temperature @ Condenser | | | | |
| Superheat | | | | |
| Subcooling | | | | |
| Discharge Superheat | | | | |
| Heating Entering and Leaving Air Temperature | | | | |
| Inlet Gas Pressure | | | | |
| Manifold Gas Pressure | | | | |
| Electric Heat kW | | | | |
| Amps per Heating Element | | | | |
| Total Electric Heat Amps | | | | |
| Discharge Air Temperature with Reheat Operational | | | | |
| Supply Air CFM | | | | |
| Return Air CFM (Occ, UnOcc) | | | | |
| Outside Air CFM (Occ, UnOcc) | | | | |

This shall be filled out in heating, cooling & dehumidification modes for every piece of DX equipment. Outdoor ambient shall be 80°F minimum for cooling readings and 50°F or below for heating readings.

## SEQUENCE OF CONTROL

Substantial Completion for Controls shall not be approved, regardless if Substantial Completion has been approved for the remainder of the project, until the Controls System is complete, fully functional, including graphics.

The Controls Supplier shall be responsible for the correct installation, connection, set up and operation of the controls system. This shall also apply to the Controls Supplier installing the system and also when the controls are supplied to the Mechanical Contractor for installation. If the Mechanical Contractor is not able get the controls to operate correctly, the Supplier shall be responsible for making all necessary corrections to ensure proper operation.

The Mechanical/Controls Contractor shall ensure that the Electrical Contractor provides sufficient sources of 120 volt power, relays and conduit for all devices, VAV boxes, damper actuators and valve actuators, etc. The Mechanical/Controls Contractor shall provide all transformers and coordinate with the Electrical Contractor for the installation of the transformers. The Mechanical/Controls Contractor shall provide all necessary wiring, components and devices such as relays, motor starters, thermostats, sensors, etc. for a complete control system. The Controls Contractor shall have an allowance in the project on the anticipated cost of the Electrical Contractors service when additional power sources are needed. This allowance will be in the Controls Contractors bid price. Failure to include the cost will not constitute a change order.

The Electrical Contractor shall furnish and install all wall boxes and rigid conduit in all walls for all thermostats, $CO_2$ sensors and other wall mounted devices. The Mechanical/Controls Contractor shall coordinate with the Electrical Contractor for the installation, location and quantity of these boxes. The Mechanical/Controls Contractor shall provide and install wiring in conduit and boxes installed by the Electrical Contractor. The Mechanical/Controls Contractor shall install all rigid conduit, boxes and wire for control devices installed in unfinished areas pending approval from the Architect that conduit, boxes and wire will be allowed to be exposed. These shall be installed in accordance with Division 16 and the box locations

All control wiring shall be shielded cable. All control wire sheathing shall be one color, orange, or as directed by the Owner's representative.

Two-position dampers shall be controlled with Belimo model NF24-S-US, direct coupled, 24 volt, 60 in-lb torque with 75 second run time, spring return and built in auxiliary switch. Fully modulating dampers shall be controlled with Belimo model NF24-SR-S-US, direct coupled, 24 volt, 60 in-lb torque, spring return and built in auxiliary switch.

All set points shall be adjustable.

Smoke detectors indicated on the mechanical plans shall be provided by the Electrical / Fire Alarm Contractor, installed by the Mechanical Contractor and shall be wired by the Electrical / Fire Alarm Contractor.

The building is protected by a global fire alarm panel. In the event any smoke detector or pull station is activated, a signal is to be sent to disable the HVAC equipment. The HVAC equipment shall be equipped with duct mounted smoke detectors as shown on the drawings. In the event a smoke detector is activated, the associated system shall be completely disabled.

Controls shall be Seimens Controls

### Systems

### RTU-1, 2, & 5

**Occupied Cooling Mode**
The unit shall be enabled during occupied periods as determined by the BAS. When the unit is enabled during the occupied mode, the outside air damper shall open to the setpoint condition. Whenever the outside air temperature is above 55°F the unit shall maintain a cooling coil discharge air temperature of 55° F. The hot gas reheat valve shall modulate to maintain the discharge air temperature to minimize the electric reheat. When the unit comes on in heating, modulate the gas valve to maintain the discharge air temperature sensor setpoint to minimize the electric reheat.

**Supply Fan Control**
The Supply Fan will operate continuously whenever the AHU is in the Occupied Mode. The Supply Fan will be OFF whenever the AHU is in the Unoccupied Mode or the supply fan status indicates a failure (after 2 min. delay.) The Low Limit and the Fan Failure require a manual reset.

**Economizer Control**
When the Outdoor Air enthalpy falls below the return air enthalpy the Outdoor Air Damper shall open fully and return air damper shall close. The cooling valve shall modulate to maintain 55 degree discharge. If the discharge air temperature falls below 55 degrees then the outdoor air and return air damper shall modulate to maintain a 55 degree discharge.

**VAV Boxes**
VAV boxes shall modulate air flow to maintain space temperature during cooling. Once the airflow is at the heating mimimun cfm the electric reheat shall modulate on SCR control to maintain space temperature setpoint.

### RTU-3, & 4

**Occupied Cooling Mode**
The unit shall be enabled during occupied periods as determined by the BAS. When the unit is enabled during the occupied mode, the outside air damper shall open to the setpoint condition. Whenever the outside air temperature is above 55°F the unit shall maintain a cooling coil discharge air temperature of 55°F. The hot gas reheat valve shall modulate to maintain space setpoint. When the unit comes on in heating the gas valve shall modulate to maintain setpoint inside the space. When kitchen hood exhaust fans are energized the outside air dampers shall open to minimum position as scheduled to provide required make up air to the hood. When the kitchen hood exhaust fans are off, outside air damper on RTU-3 & 4 shall be controlled by CO2 sensor inside the space.

**Supply Fan Control**
The Supply Fan will operate continuously whenever the AHU is in the Occupied Mode. The Supply Fan will be OFF whenever the AHU is in the Unoccupied Mode or the supply fan status indicates a failure (after 2 min. delay.) The Low Limit and the Fan Failure require a manual reset.

**Economizer Control**
When the Outdoor Air enthalpy falls below the return air enthalpy the Outdoor Air Damper shall open fully and return air damper shall close. The cooling valve shall modulate to maintain 55°Fdischarge. If the discharge air temperature falls below 55°F then the outdoor air and return air damper shall modulate to maintain a 55°F discharge.

**Ductless Split Systems**
System shall be operated and controlled by the factory mounted controls. The Controls Contractor shall install room temperature sensors integrated into the building control system to monitor the space temperature. The BAS shall be capable of enabling and disabling the system.

**Exhaust Fan EF-1 - Kitchen General Area Fan, Continuous**
All exhaust fans scheduled continuous shall run continuous at all occupied periods as determined by the BAS.

**Kitchen Hood Exhaust Fan EF-2 & EF-3**
Fan shall be energized by switches mounted on the hood and the duct/hood mounted temperature sensor (provided by the hood supplier). If the ansul system is activated the exhaust fan shall be energized regardless of switch position.

**Exhaust Fans EF-4, Main Toilets**
All exhaust fans scheduled continuous shall run continuous at all occupied periods as determined by the BAS.

**Domestic Hot Water Circulation Systems**
Circulation system shall be equipped with a pipe mounted immersion aquastat. The aquastat shall send a signal to the building controller which shall energize the circulation pumps. Domestic Boilers shall be integrated in to the building control system including circulation pumps. Hot water circulation pumps must be equipped with automatic clock type controls to turn the system off when hot water is not required.

## COORDINATION AMONG TRADES

The Civil Contractor, General/Structural Contractor, Fire Protection Contractor, Plumbing Contractor, Mechanical Contractor and Electrical Contractor shall coordinate with each other to determine the space required by, the location of, and the routing of their required respective structural members, beams, footing pours, piping, ductwork, conduits, etc. A jointly created scaled shop drawing at a minimum scale of 1/8" per 1'-0" with dimensions confirming their coordination and installation locations shall be submitted for approval prior to any installation. The minimum sheet size shall be 24" X 36". Failure to coordinate does not constitute a change order when components will not fit within the allocated space and may result in installed equipment and materials being removed at the contractor's expense.

1

## MECHANICAL DEVICES & NOTES

1 All roof mounted equipment curbs shall have a complete perimeter steel support system. See Structural for all steel requirements. Curbs shall be secured to the perimeter structural steel on all sides. Self-tapping screws, placement and spacing will be determined by the equipment manufacturers' Engineered shop drawings and details to achieve all requirements for IBC 1609 Wind Loading installation. Included with the manufacturer's installation guide for equipment with base rails will be the required wind/seismic retaining clips to secure the unit to the curb. Clips must be submitted and approved, including spacing and attachment requirements. Screw attachments as required by fans and similar caps must be secured to the curb with a submitted and approved attachment procedure from the manufacturer. All equipment shop drawings and calculations must be prepared by the manufacturers licensed Engineer for the construction requirements of the project. Shop drawings, details and calculations must bear the Engineers seal with signature and date

2 The Mechanical Contractor shall furnish and install all excluded controls as listed in Addendum 2, 01 21 00 Allowances, Item P Building Controls. Exclusings are listed under item 2.

3 The Mechanical Contractor shall review the Chick-Fil-A food service drawings, elevations, schedules and details for any mechanical work and materials required to be provided. Reference equipment schedule item number 260, 266, 269 and 270. This work included but is not limited to receiving and installing the range hoods, external hood controls, emergency pull station, Ansul R fire suppression system and duct connections. Coordinate with the Electrical Contractor for all power wiring.

4 Structural steel furnished for equipment or piping support shall be cleaned and coated with two coats of rust inhibiting primer. Where pre-primed steel is used, primer shall be applied over the cut ends. All welded steel shall be wire brushed to remove any scale, ground smooth where necessary and then primed. Where structural support steel is provided for by Structural Drawings, coordinate with the steel installer with dimensions of all curbs prior to the installation

5 All above ceiling mounted equipment and powered devices shall be mounted no greater than 12" above the ceiling level and in an accessible location for service and routine maintenance. Equipment shall include but not be limited to all indoor HVAC equipment with or without filters, fans, motorized control dampers, VRF BC controllers, remote control panels, transformers and like devices

6 Mechanical Contractor shall coordinate the location of all ceiling air distribution devices with the ceiling grid and other disciplines including, but not limited to, electrical, fire protection and architectural

7 Condensate drains on the roof shall be supported with Miro Industries model 2.5 Conduit Support-12, polycarbonate base with threaded risers and adjustable unistrut support. Adjustments shall be from 4.25" to 12" to achieve slope of the drain. All metal components will be stainless steel. Provide accessory strut clamp to secure the pipe to the unistrut base. Condensate drains shall be supported at proper intervals and at all elbows to prevent sagging. Minimum condensate drain pipe size shall be 1 1/4". Route the condensate drains on the roof to the nearest roof drain. See Condensate Sizing Schedule for sizes based on equipment tonnage.

8 Condensing unit concrete pad to be installed with the top of the pad a minimum of 3" above finished grade, and the bottom 2" below grade on undisturbed or compacted soil. Furnish and install compressible joint material between the pad and wall. Top of pad shall have a 1/4"/ft. slope away from the building wall for water runoff

9 All exterior slab mounted equipment shall have neoprene in-shear isolation pads with crossed double ribs and .25" deflection. Pads shall be molded using oil resistant 25,000 PSI tensile strength neoprene

9 Mechanical Contractor shall be responsible for installing a roll type filter media over any return grilles or open return ducts as a temporary measure to block infiltration of construction dust and debris into any active returns serving existing or new HVAC systems until the completion of construction. Any tape or clips used to secure the media shall not leave permanent marks on the grilles

2

## MECHANICAL GAS SYSTEM DEVICES & NOTES

1 Gas meter to be installed for 1299 cfh connected load at 5 psi discharge pressure. Coordinate with the Huntsville Utilities, Gas Engineering for installation requirements. Pay all charges and aid to construction costs

2 Roof mounted gas pipe supports to be Miro Industries model 3-RAH-12, adjustable assembly with stainless steel vertically adjustable rods on a stainless steel bolted base, self-lubricating polycarbonate roller and polycarbonate base. Maximum support spacing intervals shall be a distance of 10' and with a weight bearing not to exceed 186 lbs. Additional supports shall be at all elbows and tees. Coordinate with the Roofing Contractor for the installation of additional roofing material below all pipe supports bases

3 Gas pressure regulators shall be installed as indicated on the floor plan and Gas Regulator Schedule. Mechanical Contractor shall coordinate the exact position of the regulator to where the vent is not within 15' of any RTU outside air intake or entry to the building. Configure the regulator where the vent is in the vertical down position and extend independently where the outlet is within the 15' distance.

4 Mechanical Contractor shall be required to offset the gas pipe as necessary for the installation on several different roof or building levels. The offsets shall be installed with a gas support hanger adjacent to the upper drop and the lower elbow back to the horizontal position. Where the offset is greater than 6', the Contractor shall further install a wall support consisting of a bolted support base secured to the sidewall, threaded rod extension to the pipe and secured with a split ring extension hanger. All devices shall be factory, or field painted

5 All equipment shall be connected with a dirt leg extension as detailed on the drawings

### Condensate Drain Sizing

| Pipe Size | Load in Tons |
|---|---|
| 3/4" | Up To 2 Tons |
| 1" | Up to 5 Tons |
| 1-1/4" | Up to 30 Tons |
| 1-1/2" | Up to 50 Tons |
| 2" | Up to 175 Tons |
| 3" | Up to 300 Tons |

Notes:
1. All condensate drains below slab or grade to be a minimum of 2"
2. Where slope is less than 1" per foot, increase values by one pipe size.
3. Where unit condensate drains are combined, the pipe size shall be for the combined tonnage of the units.
4. Where unit or combined unit tonnage exceeds 300, the pipe size shall be 4"

MIMS ENGINEERING INC.
CONSULTING ENGINEERS
112 SOUTH SIDE SQUARE, SUITE B
HUNTSVILLE, AL. 35801
PHONE: (256) 881-4126
FAX: (256) 880-6743
WWW.MIMSENGINEERING.COM

ALABAMA REGISTERED No. 15067 PROFESSIONAL ENGINEER J.K. MIMS 3/18/2021

NOLA VANPEURSEM
ARCHITECTS, PC
MEMBERS OF THE AMERICAN INSTITUTE OF ARCHITECTS
301 JEFFERSON STREET
HUNTSVILLE, ALABAMA 35801
(256) 533-6617
NVPARCHITECTS.COM

THIS DRAWING MAY NOT BE REPRODUCED IN WHOLE OR IN PART WITHOUT THE CONSENT OF NOLA|VANPEURSEM ARCHITECTS

### VENTILATION SIZING SUMMARY

| Zone Name / Space Name | Mult. | Supply Air (CFM) | Floor Area (ft²) | Required Outdoor Air (CFM/ft²) | Time Averaged Occupancy | Required Outdoor Air (CFM/person) | Air Distribution Effectiveness | Required Outdoor Air (CFM) | Uncorrected Outdoor Air (CFM) | Space Ventilation Efficiency |
|---|---|---|---|---|---|---|---|---|---|---|
| **RTU-1** | | | | | | | | | | |
| C101 Corridor | 1 | 56 | 750 | 0.06 | 0 | 0 | 0.8 | **56** | 45 | 0.8 |
| C102 Corridor | 1 | 13 | 175 | 0.06 | 0 | 0 | 0.8 | **13** | 11 | 0.8 |
| 106A Men | 1 | 0 | 196 | 0 | 0 | 0 | 0.8 | **0** | 0 | 0.8 |
| 107 Women | 1 | 0 | 196 | 0 | 0 | 0 | 0.8 | **0** | 0 | 0.8 |
| C104 Lobby | 1 | 52 | 362 | 0.06 | 4 | 5 | 0.8 | **52** | 42 | 0.8 |
| 104 Retail | 1 | 272 | 940 | 0.12 | 14 | 7.5 | 0.8 | **272** | 218 | 0.8 |
| 108A Conference | 1 | 242 | 1230 | 0.06 | 24 | 5 | 0.8 | **242** | 194 | 0.8 |
| 108B Storage | 1 | 7 | 94 | 0.06 | 0 | 5 | 0.8 | **7** | 6 | 0.8 |
| 108C Closet | 1 | 3 | 45 | 0.06 | 0 | 5 | 0.8 | **3** | 3 | 0.8 |
| **Totals (incl. Space Multipliers)** | | **645** | | | | | | | 519 | **0.8** |
| **RTU-2** | | | | | | | | | | |
| C201 Lobby | 1 | 21 | 110 | 0.06 | 2 | 5 | 0.8 | **21** | 17 | 0.8 |
| 201 Reception | 1 | 68 | 240 | 0.06 | 8 | 5 | 0.8 | **68** | 54 | 0.8 |
| 202 Conference | 1 | 97 | 291 | 0.06 | 12 | 5 | 0.8 | **97** | 77 | 0.8 |
| 203 Director | 1 | 25 | 245 | 0.06 | 1 | 5 | 0.8 | **25** | 20 | 0.8 |
| 204 Recruiter | 1 | 14 | 100 | 0.06 | 1 | 5 | 0.8 | **14** | 11 | 0.8 |
| 205 Recruiter | 1 | 14 | 100 | 0.06 | 1 | 5 | 0.8 | **14** | 11 | 0.8 |
| 206 Recruiter | 1 | 14 | 100 | 0.06 | 1 | 5 | 0.8 | **14** | 11 | 0.8 |
| 207 Recruiter | 1 | 14 | 100 | 0.06 | 1 | 5 | 0.8 | **14** | 11 | 0.8 |
| 208A Asst. Director | 1 | 21 | 197 | 0.06 | 1 | 5 | 0.8 | **21** | 17 | 0.8 |
| 209 Recruiter | 1 | 16 | 128 | 0.06 | 1 | 5 | 0.8 | **16** | 13 | 0.8 |
| 210 Recruiter | 1 | 16 | 128 | 0.06 | 1 | 5 | 0.8 | **16** | 13 | 0.8 |
| 211 Recruiter | 1 | 16 | 128 | 0.06 | 1 | 5 | 0.8 | **16** | 13 | 0.8 |
| 212 Manager | 1 | 21 | 200 | 0.06 | 1 | 5 | 0.8 | **21** | 17 | 0.8 |
| 213 Recruiter | 1 | 15 | 110 | 0.06 | 1 | 5 | 0.8 | **15** | 12 | 0.8 |
| 214 Student Aids | 1 | 29 | 140 | 0.06 | 3 | 5 | 0.8 | **29** | 23 | 0.8 |
| 215 Open Office | 1 | 79 | 550 | 0.06 | 6 | 5 | 0.8 | **79** | 63 | 0.8 |
| 219 Break | 1 | 16 | 50 | 0.06 | 2 | 5 | 0.8 | **16** | 13 | 0.8 |
| C202, 203, 204 Corridor | 1 | 53 | 700 | 0.06 | 0 | 0 | 0.8 | **53** | 42 | 0.8 |
| 216 Men | 1 | 0 | 46 | 0 | 0 | 0 | 0.8 | **0** | 0 | 0.8 |
| 217 Women | 1 | 0 | 46 | 0 | 0 | 0 | 0.8 | **0** | 0 | 0.8 |
| 218 Janitor | 1 | 0 | 36 | 0 | 0 | 0 | 0.8 | **0** | 0 | 0.8 |
| 220 Files | 1 | 16 | 134 | 0.06 | 1 | 5 | 0.8 | **16** | 13 | 0.8 |
| 221 Workroom | 1 | 21 | 107 | 0.06 | 2 | 5 | 0.8 | **21** | 16 | 0.8 |
| **Totals (incl. Space Multipliers)** | | **586** | | | | | | | 467 | **0.8** |
| **RTU-3 & 4** | | | | | | | | | | |
| 101A Dining | 1 | 4489 | 2700 | 0.18 | 189 | 7.5 | 0.8 | **2379** | 1904 | 1 |
| **Totals (incl. Space Multipliers)** | | **4489** | | | | | | | 1904 | **0.8** |
| **RTU-5** | | | | | | | | | | |
| 102 Vendor | 1 | 112 | 371 | 0.12 | 6 | 7.5 | 0.8 | **112** | 90 | 0.8 |
| 103A Kitchen | 1 | 449 | 1740 | 0.12 | 20 | 7.5 | 0.8 | **449** | 359 | 0.8 |
| 103B Vendor | 1 | 75 | 250 | 0.12 | 4 | 7.5 | 0.8 | **75** | 60 | 0.8 |
| 103C Office | 1 | 11 | 67 | 0.06 | 1 | 5 | 0.8 | **11** | 9 | 0.8 |
| **Totals (incl. Space Multipliers)** | | **647** | | | | | | | 518 | **0.8** |

### ELECTRIC UNIT HEATER SCHEDULE

| Mark | EWH-1 | EWH-2 |
|---|---|---|
| Location | Stairs | Riser Rm |
| kW | 2.0 | 2.0 |
| Volt/Phase | 208/1/60 | 208/1/60 |
| Amps | 9.6 | 9.6 |
| Mounting | | |
| Type | Wall | Wall |
| Configuration | Recesssed | Recessed |
| Height AFF | 1'-0" | 1'-0" |
| Basis of Design | | |
| Manufacturer | Markel | Markel |
| Model | J3422T | J3422T |
| Accessories | 1, 2, 3, 4 | 1, 2, 3, 4 |

Accessories:
1. Provide built-in thermostat and disconnect switch.
2. Provide thermal cutout and fan delay switch.
3. Provide recessed mounting frame.
4. Provide 16 gauge housing and power coated steel tamper proof grille.

## MECHANICAL LEGEND

- (T) = THERMOSTAT
- (C) = CO2 SENSOR
- (CO) = CARBON MONOXIDE DETECTOR
- (SD) = SMOKE DETECTOR
- (H) = HUMIDITY SENSOR
- VD = MANUAL VOLUME DAMPER
- —G— = GAS PIPE
- —CD— = CONDENSATE DRAIN

### DUCTWORK INSULATION SCHEDULE

| System | Interior Exposed | | Interior Concealed | | Exterior | |
|---|---|---|---|---|---|---|
| | Round | Rectangular | Round | Rectangular | Round | Rectangular |
| RTU-1, 2 & 5 | | | | | | |
| Supply | - | Type 7 | Type 1, 6 | Type 1 | - | - |
| Return | - | Type 7 | Type 1, 6 | Type 7 | - | - |
| RTU-3 & 4 | | | | | | |
| Supply | - | Type 7 | Type 1, 6 | Type 7 | - | - |
| Return | - | Type 7 | Type 1, 6 | Type 7 | - | - |

Insulation Types
1. Fiberglass Blanket, 2" thick., FSK
2. Fiberglass Blanket, 3" thick., FSK
3. Rigid Fiberglass Board, 1" thick., ASJ
4. Rigid Fiberglass Board, 2" thick., FSK
5. Semi-Rigid Fiberglass Board, 1-1/2" thick., ASJ
6. Insulated Flexible Duct
7. Duct Liner
8. Double Wall Spiral

Notes:
1. Refer to the Specifications for additional insulation details and requirements
2. Round drops from the unit boot connections shall be hard duct with no more than 5'-0" of flexible duct.
3. Double Wall duct shall be paint grip material. Duct shall be painted per Owner's specification unless otherwise indicated on the drawings.

2

### GAS PRESSURE REGULATOR SCHEDULE

| Mark | Device Serving | CFH Natural Gas | Inlet Pressure | Discharge Pressure | Manufacturer | Model | Regulator Size | Inlet Pipe/ Valve Size | Discharge Pipe/Valve Size | Pipe System Length |
|---|---|---|---|---|---|---|---|---|---|---|
| GPR-1 | RTU-1 | 200 | 5 PSI | 7" to 11" WG | Sensus | 143-80-2 | 1" x 1" | 1" | 1" | 30' |
| GPR-2 | RTU-2 | 200 | 5 PSI | 7" to 11" WG | Sensus | 143-80-2 | 1" x 1" | 1" | 1" | 15' |
| GPR-3 | RTU-3 | 200 | 5 PSI | 7" to 11" WG | Sensus | 143-80-2 | 1" x 1" | 1" | 1" | 6' |
| GPR-4 | RTU-4 | 200 | 5 PSI | 7" to 11" WG | Sensus | 143-80-2 | 1" x 1" | 1" | 1" | 6' |
| GPR-5 | RTU-5 | 300 | 5 PSI | 7" to 11" WG | Sensus | 143-80-2 | 1" x 1" | 1" | 1" | 10' |
| GPR-6 | Water Heater | 199 | 5 PSI | 7" to 11" WG | Sensus | 143-80-2 | 1" x 1" | 1" | 1" | 30' |

Notes:
1 Sensus has been specified to establish type and quality of the regulator to be used. Equals by American and Fisher will be considered.
2 Regulators shall be mounted with a minumum of 10 pipe diameters of straight pipe betweeen the regulator and connected device.
3 Regulators shall be installed with increasers and reducers as necessary for connection to the piping as shown on the floor plans, schedule and detail. See details for the piping assembly required. Increasers and reducers will be installed no further than 3" from the regulator connection. Inlet and discharge gas valves and pipe sizes will be full size as scheduled.
4. All regulators are required to have an internal relief and positive lockup
5 Regulator installed inside the Boiler Room for connection to the Boiler shall be required to have the relief piped to atmosphere. Any additional regulators or relief ports on the boiler gas train assembly are also required to be vented to atmosphere.
6. All regulators installed inside the building envelope shall have the vents piped to atmosphere. Vent material shall be as specified for gas pipe.

### PIPE SUPPORT SCHEDULE

| Pipe Size | Support Spacing: Sched 40 Black Steel | Copper | PVC | Cast Iron Soil Pipe | Hanger Rod Diameter |
|---|---|---|---|---|---|
| 1/2" | - | 5'-0" | 4'-0" | - | 3/8" |
| 3/4" | 7'-0" | 5'-0" | 4'-0" | - | 3/8" |
| 1" | 7'-0" | 6'-0" | 4'-0" | - | 3/8" |
| 1-1/4" | 7'-0" | 7'-0" | 4'-0" | - | 3/8" |
| 1-1/2" | 9'-0" | 8'-0" | 4'-0" | - | 3/8" |
| 2" | 10'-0" | 8'-0" | 4'-0" | 5'-0" | 3/8" |
| 2-1/2" | 10'-0" | 9'-0" | 4'-0" | 5'-0" | 1/2" |
| 3" | 10'-0" | 10'-0" | 4'-0" | 5'-0" | 1/2" |
| 4" | 10'-0" | 10'-0" | 4'-0" | 5'-0" | 1/2" |
| 6" | 10'-0" | 10'-0" | 4'-0" | 5'-0" | 5/8" |
| 8" | 10'-0" | 10'-0" | 4'-0" | 5'-0" | 3/4" |

Note: Rods may be reduced one size for double rod hangers, with 3/8" being the minimum diameter.

ALABAMA A&M UNIVERSITY
# WELCOME CENTER
4900 MERIDIAN ST
HUNTSVILLE, ALABAMA

JOB NUMBER
18994

TS / JKM / 01/25/2021
DRAWN - CHECKED - DATE

| REVISIONS No. | Description | Date |
|---|---|---|
| 1 | ADDENDUM 2 | 03/05/2021 |
| 2 | ADDENDUM 3 | 03/18/2021 |

SHEET TITLE
**MECHANICAL SCHEDULES**

SHEET NUMBER
M-3.2
OF
8

# ELECTRICAL LEGEND

## LIGHTING

- SURFACE OR RECESSED CEILING OUTLET – FIXTURE TYPE 'F'
- CEILING OUTLET – FIXTURE SINGLE OR CONTINUOUS LENGTHS
- CEILING OUTLET – FIXTURE SINGLE OR CONTINUOUS LENGTHS CONNECTED TO EMERGENCY INVERTER OR INTEGRAL BATTERY.
- CEILING OUTLET – FIXTURE SINGLE OR CONTINUOUS LENGTHS
- CEILING OUTLET – FIXTURE SINGLE OR CONTINUOUS LENGTHS CONNECTED TO EMERGENCY INVERTER OR INTEGRAL BATTERY.
- SINGLE SIDE EXIT SIGN – WITH DIRECTIONAL CHEVRONS AS SHOWN. BATTERY BACK UP
- DOUBLE SIDE EXIT SIGN – WITH DIRECTIONAL CHEVRONS AS SHOWN. BATTERY BACK UP
- CEILING OR WALL MOUNTED EMERGENCY LIGHT, BATTERY BACKUP.
- SITE POLE

SEE PLANS, SCHEDULES, AND DETAILS FOR ADDITIONAL LIGHTING CONTROL DEVICES/INFORMATION

## POWER

- POWER PANEL – SEE SCHEDULE AND SPECIFICATIONS
- RECESSED MOUNTED POWER PANEL – SEE SCHEDULE AND SPECIFICATIONS, PROVIDE 4 EA. 1" EMPTY CONDUIT TO ABOVE CEILING FOR FUTURE USE.
- LIGHTING PANEL – SEE SCHEDULE AND SPECIFICATIONS
- RECESSED MOUNTED LIGHTING PANEL – SEE SCHEDULE AND SPECIFICATIONS, PROVIDE 4 EA. 1" EMPTY CONDUIT TO ABOVE CEILING FOR FUTURE USE.
- T TRANSFORMER – SEE SCHEDULE AND SPECIFICATIONS, 80°C RISE, FLOOR MOUNTED ON FACTORY SPRING VIBRATION.
- HP MOTOR–HORSEPOWER AS SHOWN (HP) HORSEPOWER (TYPICAL)
- F FAN – CEILING/INLINE/ROOF MOUNTED EXHAUST FAN
- P.O. FUSIBLE PULLOUT TYPE DISCONNECT SWITCH – SEE SPECIFICATIONS FOR IDENTIFICATION.
- FUSED DISCONNECT SWITCH – 600V – HEAVY DUTY TYPE, RATING AND ENCLOSURE AS SHOWN. SEE SPECIFICATIONS FOR IDENTIFICATION. FURNISH AND INSTALL NAME PLATES PER DETAIL. FUSE PER EQUIPMENT MANUFACTURER.
- NON–FUSED DISCONNECT SWITCH – 600V – HEAVY DUTY TYPE, RATING AND ENCLOSURE AS SHOWN. SEE SPECIFICATIONS FOR IDENTIFICATION. FURNISH AND INSTALL NAME PLATES PER DETAIL.
- CIRCUIT BREAKER WITH ENCLOSURE (BREAKER SIZE AS INDICATED) – 600V – RATING AND ENCLOSURE AS SHOWN – SEE SPECIFICATIONS FOR IDENTIFICATION. FURNISH AND INSTALL NAMEPLATES PER DETAIL.
- $M MANUAL MOTOR STARTER – HORSEPOWER RATED, WITH THERMAL OVERLOAD UNITS AND ENCLOSURE CONSISTENT WITH ENVIRONMENT.
- VARIABLE FREQUENCY DRIVE FURNISHED BY MECHANICAL – SEE PLANS
- ME METER ENCLOSURE AND MASTER METER FOR INDIVIDUAL CIRCUIT METERS ON BREAKERS. SEE PLANS
- HD EXCEL HAND DRYER, MODEL: XLERATOR (OR PRE–APPROVED EQUAL), 120 VAC, STAINLESS STEEL FINISH, MOUNTED ON 4" SQUARE BOX WITH SINGLE GANG RAISED COVER HEIGHT PER ADAAG LATEST EDITION. COORDINATE WITH OWNER/ARCHITECT THE MODEL OF HAND DRYER PRIOR TO ANY/ALL ORDERING.
- STUB UP TO PRE–WIRED FURNITURE. CONCEAL CONDUCTORS IN CHASE OF FURNITURE. COORDINATE WITH APPROVED FURNITURE SUBMITTALS PRIOR TO ANY/ALL ROUGHING.
- MD JUNCTION BOX WITH FLEXIBLE CONNECTION TO MOTORIZED DAMPER; 120V SEE MECHANICAL PLANS.
- MS JUNCTION BOX WITH FLEXIBLE CONNECTION TO MOTORIZED SCREEN; 120V
- JUNCTION BOX WITH FLEXIBLE CONNECTION TO EQUIPMENT. SEE PLANS.
- DC JUNCTION BOX WITH FLEXIBLE CONNECTION TO DOOR CONTROLLER. 120V.
- CEILING MOUNTED JUNCTION BOX. SEE PLANS.
- WALL MOUNTED JUNCTION BOX. SEE PLANS.
- EMERGENCY GAS SHUT–OFF, SEE PLANS AND DETAILS.
- DC JUNCTION BOX WITH FLEXIBLE CONNECTION TO DOOR CONTROLLER OR MOTORED DOOR OPERATOR; 120V
- 10 HOMERUN TO PANELBOARD – #10 AWG WIRE WITH NEC CODE AND CONDUIT PER NEC FILL.
- HOMERUN TO PANELBOARD – ANY CIRCUIT WITHOUT FURTHER DESIGNATION IS 2 NO. 12, 1#12 GRN, 3/4" C. 4 NO. 12, 1#12 GRN, 3/4" C. 6 NO. 12, 1#12 GRN, 3/4" C. AS PER N.E.C.
- BRANCH CIRCUIT – ROUTED ABOVE CEILING OR IN WALL (SEE SPECIFICATIONS)
- BRANCH CIRCUIT – ROUTED IN FLOOR (SEE SPECIFICATIONS)
- BRANCH CIRCUIT – EXPOSED (SEE SPECIFICATIONS).
- E EMPTY CONDUIT WITH NO. 14 IRON FISH WIRE
- FEEDER – OVERHEAD
- FEEDER – UNDERGROUND
- WP INDICATES DEVICE TO BE WEATHER–PROOF

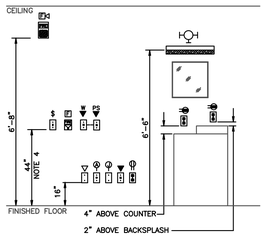


## TYPICAL MOUNTING HEIGHTS

NOT TO SCALE

NOTES:

1. INDICATED MOUNTING HEIGHTS ARE FROM FINISHED FLOOR TO BOTTOM OF OUTLET BOX, UNLESS OTHERWISE NOTED.
2. REFER TO ARCHITECTURAL DETAILS FOR ADDITIONAL REQUIREMENTS.
3. INSTALL OUTLETS THAT ARE IN CLOSE PROXIMITY ON THE SAME CENTERLINE.
4. INDICATED DEVICES MOUNTED IN A BLOCK WALL SHALL BE 4'–0" TO TOP OF COVER PLATE.

## RECEPTACLES

- DUPLEX RECEPTACLE, NEMA 5–20R, SEE SPECIFICATIONS.
- DUPLEX RECEPTACLE, NEMA 5–20R, SEE SPECIFICATIONS. REFER TO ARCHITECTURAL ELEVATIONS FOR MOUNTING HEIGHTS.
- WP GFI DUPLEX RECEPTACLE, NEMA 5–20R, GROUND FAULT INTERRUPTER, WEATHERPROOF. (IN USE TYPE WHERE REQUIRED.)
- USB DUPLEX RECEPTACLE, 15A., 125V., 2 POLE, 3W., NEMA 5–15R, WITH TWO USB CHARGING PORTS, HUBBELL #USB15X.
- USB WP DUPLEX RECEPTACLE, WEATHER–RESISTANT, 15A., 125V., 2 POLE, 3W., NEMA 5–15R, WITH TWO USB CHARGING PORTS AND WEATHER–PROOF IN–USE COVER.
- DEDICATED DUPLEX RECEPTACLE, NEMA 5–20R, SEE SPECIFICATIONS.
- DEDICATED QUADRAPLEX RECEPTACLE, NEMA 5–20R, SEE SPECIFICATIONS.
- GFI DUPLEX RECEPTACLE, NEMA 5–20R, SELF TEST GROUND FAULT INTERRUPTER, FEED–THRU.
- QUADRAPLEX, NEMA 5–20R WITH SINGLE PLATE.
- EWC ELECTRIC WATER COOLER SIMPLEX RECEPTACLE, NEMA 5–20R, VERIFY EXACT HEIGHT AND LOCATION PRIOR TO INSTALLATION.
- MW DUPLEX RECEPTACLE, NEMA 5–20R, WITH GROUND FAULT INTERRUPTER, CONNECTION FOR MICROWAVE, COORDINATE MOUNTING HEIGHT WITH ARCHITECTURAL ELEVATIONS.
- R DUPLEX RECEPTACLE, NEMA 5–20R, CONNECTION FOR REFRIGERATOR, COORDINATE MOUNTING HEIGHT WITH ARCHITECTURAL ELEVATIONS.
- UCR DUPLEX RECEPTACLE, NEMA 5–20R, CONNECTION FOR UNDER COUNTER REFRIGERATOR, COORDINATE MOUNTING HEIGHT WITH ARCHITECTURAL ELEVATIONS.
- IM DUPLEX RECEPTACLE, NEMA 5–20R, CONNECTION FOR ICE MACHINE, COORDINATE MOUNTING HEIGHT WITH ARCHITECTURAL ELEVATIONS.
- TV DUPLEX RECEPTACLE, NEMA 5–20R. MOUNTED IN T.V. CONTROL OUTLET BOX. PROVIDE STEEL BARRIER. COORDINATE EXACT MOUNTING HEIGHT WITH ARCHITECTURAL ELEVATIONS.
- MC MEDIA CONVERTER ENCLOSURE, SEE DETAIL :POLE MOUNTED CAMERA.
- WALL OUTLET – SINGLE OUTLET, SEE PLANS FOR NEMA CONFIGURATION. VERIFY NEMA CONFIGURATION WITH OWNER PRIOR TO ANY/ALL ORDERING.
- S CONTROLLED DUPLEX RECEPTACLE, NEMA 5–20R WITH SINGLE PLATE. RECEPTACLE TO BE PERMANENTLY MARKED BY FACTORY (CONTROLLED). RECEPTACLE TO BE CONTROLLED BY BAS VIA TIME OF DAY SCHEDULING. CONTROL DEVICE TO COMPLY WITH ASHRAE 90.1, 2013. RECEPTACLE HALF SWITCHED. (2)
- S CONTROLLED DOUBLE DUPLEX RECEPTACLE, (2) NEMA 5–20R WITH SINGLE PLATE. RECEPTACLE TO BE PERMANENTLY MARKED BY FACTORY (CONTROLLED). RECEPTACLE TO BE CONTROLLED BY BAS VIA TIME OF DAY SCHEDULING. CONTROL DEVICE TO COMPLY WITH ASHRAE 90.1, 2013. RECEPTACLES HALF SWITCHED.
- RC RECEPTACLE RF TRANSMITTER – LEGRAND #WRC–TX WITH POWER PACK AND OCCUPANCY SENSOR. COORDINATE WITH MANUFACTURER COVERAGE OF OCCUPANCY SENORS AND PROVIDE AMOUNT PER MANUFACTURERS SPECIFICATIONS. ALL NEW 120V, 20A. DUPLEX RECEPTACLES TO BE RF CONTROLLED PLUG–LOAD RECEPTACLES (WIREMOLD# RF26352CHGRY) COMPLETE WITH PLUG–LOAD SIGNAL PACKS (ONE PER EACH ROOM WITH CONTROLLED RECEPTACLES).
- SRS RECEPTACLE TO BE MOUNTED IN SOUND REINFORCEMENT ENCLOSURE (LIGHTSPEED CEILING SPEAKER/ RECEIVER)

## RECEPTACLE CONTROL NARRATIVE

ALL OUTLETS/DEVICES MARKED WITH AN "S" TO BE SWITCHED BY AN OCCUPANCY SENSOR PER (ASHRAE 90.1 2013. CHAPTER 8 SECTIONS 8.4.2) COORDINATE WITH THE AHJ FOR THE PROGRAM SCHEDULE FOR CONTROLLED AREAS. PROVIDE MANUAL OVERRIDE FOR ALL OUTLETS/DEVICES PER A MAXIMUM OF 5,000 SQ FT. AND TO STAY ON FOR UP TO 2 HOURS MAXIMUM FOR ALL CONTROLLED AREAS. SEE PLANS AND LEGEND FOR MANUAL OVERRIDE DEVICE AND LOCATIONS.

## FLOOR BOXES

- FSC FLOOR OUTLET – (POKE–THRU) – WIREMOLD (RC4ATC) SERIES POKE–THRU ASSEMBLY FOR POWER AND DATA CONNECTIONS, COMPLETE WITH 2 EACH FACTORY PREWIRED 20A DUPLEX RECEPTACLES (ONTROLLED DUPLEX RECEPTACLE, NEMA 5–20R WITH SINGLE PLATE. RECEPTACLE TO BE PERMANENTLY MARKED BY FACTORY (CONTROLLED). RECEPTACLE TO BE CONTROLLED BY BAS VIA TIME OF DAY SCHEDULING. CONTROL DEVICE TO COMPLY WITH ASHRAE 90.1, 2013.) AND TWO EACH CAT6 RJ45 COMMUNICATION CONNECTORS. FURNISH AND INSTALL (COM75) COMMUNICATION CONDUIT ADAPTER. ROUTE 1" CONDUIT (FOR AUXILIARY CABLING) TO NEAREST WALL, RISE TO ABOVE CEILING AND TERMINATE WITH SMOOTH BUSHING. FURNISH AND INSTALL J–HOOKS (3FT. ON CENTER) TO NEAREST CABLE TRAY/SLEEVE/AUXILIARY BACKBOARD. (ACTIVATION COVER FINISH AS SELECTED BY ARCHITECT). FURNISH AND INSTALL 2 EACH CAT 6 CABLES FROM FLOOR BOX TO NEAREST AUXILIARY BACKBOARD AND TERMINATE PER SPECIFICATIONS.

PRA
- FLOOR OUTLET – (RECESSED ACTIVATION POKE THRU – POWER, COMMUNICATIONS, A/V)
  a. WIREMOLD# 10ATC COMPLETE WITH THE FOLLOWING:
     1) COVER (COVER TYPE AND FINISH AS SELECTED BY ARCHITECT)
     2) 2 EACH DUPLEX RECEPTACLES, EACH RECEPTACLE TO BE HALF–SWITCHED
     3) 1 EACH COMMUNICATION PLATE WITH 3 EACH CAT6 PORTS (2 DATA AND 1 A/V)
     4) 1 EACH HDMI (QUIKTRON# 2212–42422–001)
     5) 1 EACH MULTIMEDIA (QUIKTRON# 2212–0854–001)
     6) FACEPLATES, INSERTS, BRACKETS AND BEZELS AS REQUIRED.
  b. FURNISH AND INSTALL THE FOLLOWING CONDUITS AND CABLES TO NEAREST WALL AND RISE TO ABOVE ACCESSIBLE CEILING.
     1) 1¼"C (POWER) TO CIRCUIT AS INDICATED ON DRAWINGS AND CONNECT AS REQUIRED.
     2) 1"C (DATA) WITH CAT6 CABLES TO NEAREST BACKBOARD AND CONNECT AS REQUIRED.
     3) 1"C (PODIUM A/V) WITH CAT6 CABLE TO SOUND SYSTEM
     4) 1"C (A/V – HDMI) WITH DIGITAL HIGH–SPEED RUNNER CABLE (QUIKTRON# 2212–42408–100 – REDUCE LENGTH AS PERMISSIBLE) TO DISPLAY (◀LCDP) AND CONNECT AS REQUIRED.
     5) 1"C (A/V – MULTIMEDIA) WITH PC RUNNER CABLE (QUIKTRON# 2212–42143–150 – REDUCE LENGTH AS PERMISSIBLE) TO DISPLAY (◀LCDP) AND CONNECT AS REQUIRED.

FRA
- FLOOR OUTLET – (RECESSED ACTIVATION FLOOR BOX – POWER, COMMUNICATIONS, A/V)
  a. WIREMOLD# RFB11 COMPLETE WITH THE FOLLOWING:
     1) COVER (COVER TYPE AND FINISH AS SELECTED BY ARCHITECT)
     2) 2 EACH DUPLEX RECEPTACLES, EACH RECEPTACLE TO BE HALF–SWITCHED
     3) 1 EACH COMMUNICATION PLATE WITH 3 EACH CAT6 PORTS (2 DATA AND 1 A/V)
     4) 1 EACH HDMI (QUIKTRON# 2212–42422–001)
     5) 1 EACH MULTIMEDIA (QUIKTRON# 2212–0854–001)
     6) FACEPLATES, INSERTS, BRACKETS AND BEZELS AS REQUIRED.
  b. FURNISH AND INSTALL THE FOLLOWING CONDUITS AND CABLES TO NEAREST WALL AND RISE TO ABOVE ACCESSIBLE CEILING.
     1) 1¼"C (POWER) TO CIRCUIT AS INDICATED ON DRAWINGS AND CONNECT AS REQUIRED.
     2) 1"C (DATA) WITH CAT6 CABLES TO NEAREST BACKBOARD AND CONNECT AS REQUIRED.
     3) 1"C (PODIUM A/V) WITH CAT6 CABLE TO SOUND SYSTEM
     4) 1"C (A/V – HDMI) WITH DIGITAL HIGH–SPEED RUNNER CABLE (QUIKTRON# 2212–42408–100 – REDUCE LENGTH AS PERMISSIBLE) TO DISPLAY (◀LCDP) AND CONNECT AS REQUIRED.
     5) 1"C (A/V – MULTIMEDIA) WITH PC RUNNER CABLE (QUIKTRON# 2212–42143–150 – REDUCE LENGTH AS PERMISSIBLE) TO DISPLAY (◀LCDP) AND CONNECT AS REQUIRED.

## AUXILIARY LEGEND

- DATA DROP – SEE AUXILIARY OUTLET DETAIL – 16" ABOVE FINISHED FLOOR
- DATA DROP – SEE AUXILIARY OUTLET DETAIL – ABOVE COUNTER OR OTHER DESIGNATED HEIGHT (HEIGHT TO BE NOTED AT DEVICE)
- WAP WAP DROP – SEE AUXILIARY OUTLET DETAIL
- TV TV DROP – SEE AUXILIARY OUTLET DETAIL
- EMPTY BOX FOR FUTURE USE – 1 EACH 1"C TO ABOVE ACCESSIBLE CEILING
- SLEEVE SIZE / SLEEVE QUANTITY — CONDUIT SLEEVE FOR LOW–VOLTAGE CABLING. FIRST NUMBER INDICATES SLEEVE QUANTITY, SECOND NUMBER INDICATES SLEEVE SIZE. ALL FIRE RATED PENETRATIONS SHOWN WITH 2" OR 4" SLEEVES SHALL INCLUDE WIREMOLD FLAMESTOPPER. CAULK, WOOL AND PUTTY WILL NOT BE ACCEPTABLE FIRE RATED SEALS FOR 2" AND 4" SLEEVES
- CT WIRE BASKET CABLE TRAY SHALL BE CABLOFIL# CF150/ 200 8"W, 6"D AND SHALL BE CENTER HUNG. INCLUDE ALL HARDWARE AS REQUIRED FOR MOUNTING.

## SECURITY

- CR ACCESS CONTROL DOOR. CARD READER AND ASSOCIATED CABLING TO BE FURNISHED AND INSTALLED BY OTHER (NIC). RACEWAY TO BE FURNISHED AND INSTALLED BY ELECTRICAL CONTRACTOR – SEE DETAILS.
- DM MONITORED DOOR. DOOR POSITION SWITCH AND ASSOCIATED CABLING TO BE FURNISHED AND INSTALLED BY OTHER (NIC). RACEWAY TO BE FURNISHED AND INSTALLED BY ELECTRICAL CONTRACTOR – SEE DETAILS.
- DC DOOR CONTROLLER FAS CONNECTION. FIRE ALARM CONTRACTOR TO FURNISH AND INSTALL DEDICATED CONNECTION FROM FACP TO DOOR CONTROLLER FOR DOOR RELEASE DURING A FIRE ALARM PUBLIC NOTIFICATION EVENT.
- VE INTERCOM STATION. INTERCOM STATION AND ASSOCIATED CABLING TO BE FURNISHED AND INSTALLED BY OTHER (NIC). ELECTRICAL CONTRACTOR TO FURNISH AND INSTALL SINGLE GANG BOX WITH 1"C (EMPTY) TO ABOVE NEAREST ACCESSIBLE CEILING AND TERMINATE WITH SMOOTH BUSHING. LABEL CONDUIT PER SPECS.
- CAM WALL–MOUNTED VIDEO SURVEILLANCE CAMERA AND ASSOCIATED CABLING TO BE FURNISH AND INSTALLED BY OTHERS (NIC). ELECTRICAL CONTRACTOR TO FURNISH AND INSTALL FLUSH–MOUNTED SINGLE GANG BOX WITH 1"C (EMPTY) TO ABOVE NEAREST ACCESSIBLE CEILING. BOX TO BE MOUNTED ABOVE LEVEL OF FIRST FLOOR CEILING.
- RB REMOTE RELEASE PUSH BUTTON. BUTTON AND ASSOCIATED CABLING TO BE FURNISHED AND INSTALLED BY OTHER (NIC). ELECTRICAL CONTRACTOR TO FURNISH AND INSTALL SINGLE GANG BOX WITH 1"C (EMPTY) TO ABOVE NEAREST ACCESSIBLE CEILING AND TERMINATE WITH SMOOTH BUSHING. LABEL CONDUIT PER SPECS.
- DB DURESS BUTTON. BUTTON AND ASSOCIATED CABLING TO BE FURNISHED AND INSTALLED BY OTHER (NIC). ELECTRICAL CONTRACTOR TO FURNISH AND INSTALL SINGLE GANG BOX WITH 1"C (EMPTY) TO ABOVE NEAREST ACCESSIBLE CEILING AND TERMINATE WITH SMOOTH BUSHING. LABEL CONDUIT PER SPECS.
- KP SECURITY KEY PAD. SECURITY KEY PAD AND ASSOCIATED CABLING TO BE FURNISHED AND INSTALLED BY OTHER (NIC). ELECTRICAL CONTRACTOR TO FURNISH AND INSTALL SINGLE GANG BOX WITH 1"C (EMPTY) TO ABOVE NEAREST ACCESSIBLE CEILING AND TERMINATE WITH SMOOTH BUSHING. LABEL CONDUIT PER SPECS.
- HC HANDICAP DOOR OPERATOR. OPERATOR TO BE FURNISHED AND INSTALLED BY OTHERS WITH FINAL CONNECTIONS BY ELECTRICAL CONTRACTOR.

## A/V SYSTEMS LEGEND

- $ RLS LOW–VOLTAGE RAISE LOWER STOP SWITCH FOR MOTORIZED PROJECTOR SCREEN CONTROL. MOUNT SWITCH IN FLUSH BOX AND CONNECT TO MOTORIZED SCREEN AS REQUIRED – SEE PLANS AND DETAILS
- AVI AUDIO VIDEO INPUT LOCATION. SEE PLANS, DETAILS AND SPECIFICATIONS. PROVIDE TWO (2) EACH 1"C TO ABOVE ACCESSIBLE CEILING WITH CABLING AS REQUIRED FOR AUDIO VIDEO (4K) CONNECTIONS TO AV SWITCHER. AV INPUT LOCATION TO BE SELECTABLE FROM WALL TOUCH PANEL. AV OUTPUT LOCATION (PROJECTOR AND/ OR WALL DISPLAY) TO SELECTABLE FROM WALL TOUCH PANEL.
- ITP INTERACTIVE TOUCH PANEL MOUNTED ON WALL. SEE PLANS, DETAILS AND SPECIFICATIONS
- AVR AUDIO/ VIDEO SYSTEM RACK. SEE PLANS, DETAILS AND SPECIFICATIONS
- L OS AV SYSTEM VACANCY SENSOR. SEE PLANS, DETAILS AND SPECIFICATIONS
- SCA ROOM CONTROLLER AND SCALER MOUNTED ABOVE CEILING NEAR PROJECTOR. SEE PLANS, DETAILS AND SPECIFICATIONS
- PRJ CEILING MOUNT PROJECTOR WITH CEILING PLATE, ARM AND PROJECTOR MOUNT. PROJECTOR SHALL BE PANASONIC# PT–RZ770WU. SEE PLANS, DETAILS AND SPECIFICATIONS. OPTIMUM THROW DISTANCE IS 23'–1", THROW RANGE IS 11'–4" TO 69'–7". SEE ARCHITECTURAL PLAN FOR SCREEN MOUNTING LOCATION. PROJECTOR SHALL BE MOUNTED AS NEAR TO THE OPTIMAL THROW RANGE, FROM THE SCREEN, AS POSSIBLE. PROVIDE TWO (2) EACH 1"C TO ABOVE ACCESSIBLE CEILING WITH CABLING AS REQUIRED FOR AUDIO VIDEO (4K) CONNECTIONS TO AV SWITCHER. AV INPUT LOCATION TO BE SELECTABLE FROM WALL TOUCH PANEL. AV OUTPUT LOCATION (PROJECTOR AND/ OR WALL DISPLAY) TO SELECTABLE FROM WALL TOUCH PANEL.
- MS# MOTORIZED PROJECTION SCREEN. SEE PLANS, DETAILS AND SPECIFICATIONS. SCREEN SHALL BE DA–LITE# 29881 (OR PRE–APPROVED EQUAL)
- CR S CEILING MOUNTED SPEAKER. SEE PLANS, DETAILS AND SPECIFICATIONS
- BF M CEILING MOUNTED MICROPHONE. SEE PLANS, DETAILS AND SPECIFICATIONS
- T C WALL MOUNTED LECTURE CAMERA ON FLUSH BOX. SEE ARCHITECTURAL ELEVATIONS FOR MOUNTING HEIGHT. SEE PLANS, DETAILS AND SPECIFICATIONS
- LCDP CONFERENCE WALL DISPLAY. SEE PLANS, DETAILS AND SPECIFICATIONS. PROVIDE TWO (2) EACH 1"C TO ABOVE ACCESSIBLE CEILING WITH CABLING AS REQUIRED FOR AUDIO VIDEO (4K) CONNECTIONS TO AV SWITCHER. AV INPUT LOCATION TO BE SELECTABLE FROM WALL TOUCH PANEL. AV OUTPUT LOCATION (PROJECTOR AND/ OR WALL DISPLAY) TO SELECTABLE FROM WALL TOUCH PANEL. HEIGHT AS NOTED ON ARCHITECTURAL ELEVATIONS. COORDINATE WITH GENERAL CONTRACTOR FOR ALL REQUIRED BLOCKING IN WALL. SEE DETAIL: FLOOR BOX TYPE "PRA" AND "FRA"
- CDP CONFERENCE WALL DISPLAY. SEE PLANS, DETAILS AND SPECIFICATIONS. PROVIDE TWO (2) EACH 1"C TO ABOVE ACCESSIBLE CEILING WITH CABLING AS REQUIRED FOR AUDIO VIDEO (4K) CONNECTIONS TO AV SWITCHER. AV INPUT LOCATION TO BE SELECTABLE FROM WALL TOUCH PANEL. HEIGHT AS NOTED ON ARCHITECTURAL ELEVATIONS. COORDINATE WITH GENERAL CONTRACTOR FOR ALL REQUIRED BLOCKING IN WALL. SEE DETAIL: FLOOR BOX TYPE "PRA" AND "FRA"

## FIRE ALARM LEGEND

- FACP FIRE ALARM CONTROL PANEL – EDWARDS MODEL VS2 SERIES INTELLIGENT ADDRESSABLE ANALOG FIRE DETECTION CONTROL PANEL WITH STAND–BY BATTERY SURFACE MOUNTED AT 5'–0" TO CENTERLINE
  - * FURNISH AND INSTALL INTEGRAL VOICE EVACUATION
  - ** PROVIDE FACTORY INSTALLED BATTERY BACKUP AND FACTORY INSTALLED SURGE SUPPRESSION DEVICE IN FACP.
  - *** CONTRACTOR SHALL PROVIDE COMPLETE, INDEPENDENT 2EA. CAT5E TELEPHONE LINE FROM AUXILIARY BACKBOARD/ MDF: BB1 TO FIRE ALARM CONTROL PANEL. CAT5E SHALL BE ROUTED IN 3/4" EMT CONDUIT FROM POINT "A" TO POINT "B" AND TERMINATED AS REQUIRED BY FIRE ALARM TECHNICIAN.
  - **** FURNISH AND INSTALL INTEGRAL WEB SERVER ACCESS CARD.
  - ***** FURNISH AND INSTALL POINT ID CELLULAR DIALER FOR PRIMARY AND BACK–UP AT FACP.
- FAA REMOTE FIRE ALARM ANNUNCIATOR PANEL – EDWARDS MODEL K–RLCD–C IN FLUSH MOUNTED SERIES BOX. PROVIDE REMOTE MICROPHONE ADJACENT TO ANNUNCIATOR IN SAME FLUSH MOUNTED BOX.
- NAC REMOTE FIRE ALARM NAC PANEL – EDWARDS MODEL APS10A SURFACE MOUNTED AT LOCATIONS SHOWN IN FACTORY BOX. SEE PLANS FOR CKT.#
- F MANUAL PULL STATION – EDWARDS MODEL ES5001–0279 W/ FLUSH MOUNTED BACKBOX (4" SQUARE BOX WITH SINGLE GANG RAISED COVER) MOUNTED @ + 44" A.F.F. TO BOTTOM.
- F FIRE ALARM STROBE – EDWARDS MODEL GCF–VM – CEILING MOUNTED ON FLUSH 4" SQUARE BOX WITH 1–1/2" EXTENSION RING
- F FIRE ALARM SPEAKER STROBE – EDWARDS MODEL GCF–52VM – CEILING MOUNTED ON FLUSH 4" SQUARE BOX WITH 1–1/2" EXTENSION RING
- WP F WEATHERPROOF FIRE ALARM HORN STROBE – EDWARDS MODEL 4WGWF–SVMC – WALL MOUNTED ON FLUSH 4" SQUARE BOX @ +144 INCHES (12') AFG
- S SMOKE DETECTOR – EDWARDS MODEL EB5001–0651 – WITH BASE/CEILING MOUNTED ON FLUSH 4" SQUARE BOX
- DD–S DUCT DETECTOR (SUPPLY AIR) – EDWARDS MODEL EB5001–0354 W/ SAMPLING TUBE & RELAY FURNISHED BY FIRE ALARM CONTRACTOR, INSTALLED IN DUCT BY MECHANICAL, FINAL CONNECTIONS BY FIRE ALARM CONTRACTOR.
- DD–R DUCT DETECTOR (RETURN AIR) – EDWARDS MODEL EB5001–0354 W/ SAMPLING TUBE & RELAY FURNISHED BY FIRE ALARM CONTRACTOR, INSTALLED IN DUCT BY MECHANICAL, FINAL CONNECTIONS BY FIRE ALARM CONTRACTOR.
- V HEAT DETECTOR – EDWARDS MODEL EB5001–0820 – WITH BASE/CEILING MOUNTED ON FLUSH 4" SQUARE BOX
- FS FLOW SWITCH MONITOR MODULE – EDWARDS MODEL GSA–CT1: FLOW SWITCH FURNISHED AND INSTALLED BY OTHERS, MODULE FURNISHED AND INSTALLED BY FIRE ALARM CONTRACTOR. CONNECT TO FACP AS A SEPARATE ZONE.
- TS TAMPER SWITCH MONITOR MODULE – EDWARDS MODEL GSA–CT1 TAMPER SWITCH FURNISHED AND INSTALLED BY OTHERS, MODULE FURNISHED AND INSTALLED BY FIRE ALARM CONTRACTOR. CONNECT TO FACP AS REQUIRED.
- RT REMOTE TEST STATION (KEY OPERATED) – KEY BOX TYPE, FLUSH MOUNTED, HEIGHT CONDUIT AND WIRE TO DUCT DETECTOR AS REQUIRED. PROVIDE FINAL CONNECTIONS AS REQUIRED
- WG WIRE GUARD W/ TAMPER PROOF SCREWS – REQUIRED IN GYM, AUXILIARY GYM, AND WHERE SHOWN
- F FIRE ALARM CONDUIT & WIRE – SEE FIRE SYSTEM NOTES.
- $Z_M$ ZAM – ZONE ADDRESSABLE MODULE, MONITOR (INPUT TO FIRE ALARM PANEL FROM A DEVICE OR SYSTEM)
- $Z_C$ ZAM – ZONE ADDRESSABLE MODULE, CONTROL (OUTPUT FROM FIRE ALARM PANEL TO A DEVICE OR SYSTEM)
- R INTERPOSING RELAY FOR USE WITH CONTROL ZAM, 20 AMP CONTACTS

## FIRE ALARM SYSTEM NOTES

1. FIRE ALARM CONTRACTOR TO INCLUDE IN BID PRICE PROOFED REQUIRED PROGRAMMING SERVICES SUCH THAT THE FINAL ROOM NUMBERS (PER THE APPROVED OWNERS SIGNAGE SCHEME) FOR EACH F.A. SYSTEM DEVICE SUCH THAT ALARMS AND DEVICE LOCATIONS MATCH BUILDING SIGNAGE.
2. FIRE ALARM SUB–CONTRACTOR TO FURNISH POINT TO POINT WIRING DIAGRAM BY THE FIRE ALARM MANUFACTURER WITH FIRE ALARM SYSTEM SUBMITTALS. POINT TO POINT WIRING DIAGRAMS SHALL INCLUDE ALL WIRING INFORMATION AND CONDUIT SIZES. REQUIRED WIRING DIAGRAMS SHALL BE FURNISHED WITH THE ELECTRICAL SUBMITTAL PACKAGE, SUBMITTAL PACKAGES WITHOUT THESE DRAWINGS AND THE REQUIRED MAINTENANCE AND EXPANSION INFORMATION (SEE SPECIFICATIONS) WILL NOT BE ACCEPTED.
3. ELECTRICAL CONTRACTOR SHALL COORDINATE ALL WIRING REQUIREMENTS WITH THE FIRE ALARM SYSTEM SUBCONTRACTOR PRIOR TO BIDDING AND/OR ROUGHING. FURNISH AND INSTALL ALL REQUIRED 120V. CIRCUITS FOR AMPLIFIERS, FIELD CHARGING PANELS, RELAY PANELS, ETC..
4. ALL FIRE ALARM CABLING SHALL BE INSTALLED CONCEALED IN CONDUIT, 3/4" MINIMUM (NO EXCEPTIONS). ALL FIRE ALARM CONDUITS SHALL BE RED TRUE COLOR EMT AS MANUFACTURED BY ALLIED TUBE AND CONDUIT.
5. FIRE ALARM SYSTEM CONTRACTOR SHALL FURNISH AND INSTALL REMOTE TEST STATION(S) FOR ALL DUCT MOUNTED SMOKE DETECTORS. THESE STATIONS SHALL BE LABELED WITH THE DEVICE NUMBER AND THE UNIT NUMBER. THE REMOTE TEST STATION(S) SHALL BE LOCATED IN AN ACCESSIBLE LOCATION.
6. THE ELECTRICAL CONTRACTOR SHALL COORDINATE LOCATIONS FOR ALL FIRE PROTECTION SYSTEM VALVES WITH THE FINAL FIRE PROTECTION SYSTEM PLANS PRIOR TO BIDDING AND/OR ROUGHING. AT EACH CONTROL VALVE, THE CONTRACTOR SHALL PROVIDE FIRE ALARM SYSTEM CONNECTIONS TO THE FLOW AND TAMPER SWITCHES (FURNISHED AND INSTALLED BY OTHERS).
7. DUCT MOUNTED SMOKE DETECTORS FURNISHED BY THE ELECTRICAL CONTRACTOR. AND INSTALLED BY THE MECHANICAL CONTRACTOR LOCATIONS SHOWN ARE FOR REFERENCE ONLY. COORDINATE EXACT LOCATION WITH THE MECHANICAL PLANS AND FINAL CONNECTIONS BY FIRE ALARM CONTRACTOR. PROVIDE ALL EQUIPMENT REQUIRED FOR SHUTDOWN OF THE UNITS BY THE FIRE ALARM CONTROL PANEL AS REQUIRED.
8. CONTRACTOR SHALL PROVIDE WITH THE FIRE ALARM SUBMITTAL PACKAGE THE FOLLOWING INFORMATION PER IBC 2015:
   - COPY OF STATE OF ALABAMA FIRE ALARM CONTRACTOR LICENSE/PERMIT
   - LOCATION OF ALARM INITIATING DEVICES
   - CONDUCTOR TYPES AND SIZES AND TERMINATING EQUIPMENT
   - MODEL NUMBERS AND LISTING INFORMATION FOR EQUIPMENT DEVICES AND MATERIALS
9. THE NEW FIRE ALARM SYSTEMS WILL COMPLY WITH THE REQUIREMENTS OF THE FOLLOWNG CODES:
   - INTERNATIONAL BUILDING CODE 2015
   - INTERNATIONAL FIRE CODE 2015
   - NFPA 72 2013
   - ALL REQUIREMENTS OF THE AUTHORITY HAVING JURISDICTION
10. THE CERTIFIED FIRE ALARM ACT REQUIRES THAT EVERY BUSINESS WHO INSTALLS FIRE ALARM SYSTEMS IN COMMERCIAL OCCUPANCIES MUST BE LICENSED AS A CERTIFIED FIRE ALARM CONTRACTOR. THE CONTRACTOR MUST HAVE A NICET LEVEL III TECHNICIAN IN A POSITION OF RESPONSIBILITY, AND THE LICENSE WILL BE ISSUED IN THE NAME OF THE CERTIFICATE HOLDER AND THE CONTRACTOR. THE CERTIFIED FIRE ALARM ACT ALSO REQUIRES THAT TECHNICIANS WORKING FOR THE CERTIFIED CONTRACTOR MUST HOLD A CURRENT NICET LEVEL II, OR EQUIVALENT, CERTIFICATION. CONTRACTORS TO SHOW EVIDENCE WITH SUBMITTAL PACKAGE THAT HE/SHE MEETS THE CERTIFICATION REQUIREMENTS OF THE ACT AND HOLDS A PERMIT ISS

# PANELBOARD SCHEDULE

| NAME PLATE INFORMATION | MARK | TYPE | MAINS | | | BRANCHES | | | | | MTD. | REMARKS | APPROVED EQUALS | AVAILABLE FAULT CURRENT | SURGE PROTECTION DEVICE |
|---|---|---|---|---|---|---|---|---|---|---|---|---|---|---|---|
| | | | TYPE | AMPS | SERVICE | 1-POLE | 2-POLE | 3-POLE | SPARES | SPACES | | | | | |
| ECB1 120/208V 3P,4W FED FROM UTILITY | ECB1 | SQUARE 'D' BREAKER 1200AMP | ENCLOSED | 1200 | 120/208V 3P,4W | ----- | ----- | ----- | ----- | ----- | SURFACE | OUTSIDE | G.E. , SIEMENS, CUTLER HAMMER | 35,178 | NONE |
| ECB2 120/208V 3P,4W FED FROM UTILITY | ECB2 | SQUARE 'D' BREAKER 800AMP | ENCLOSED | 800 | 120/208V 3P,4W | ----- | ----- | ----- | ----- | ----- | SURFACE | OUTSIDE | G.E. , SIEMENS, CUTLER HAMMER | 25,454 | NONE |
| M1 120/208V 3P,4W FED FROM ECB1 | M1 | SQUARE 'D' I-LINE HCP 1200AMP | MLO | 1200 | 120/208V 3P,4W | ----- | 2-20 A, 2-40 A, | 1-45 A, 4-60 A, 1-70 A, 2-125 A, 2-200 A, 1-200 A ST, 1-225 A, 1-400 A, | ----- | ----- | SURFACE | ELECTRICAL E101 | G.E. , SIEMENS, CUTLER HAMMER | 31,974 | NONE |
| L1 120/208V 3P,4W FED FROM M1 | L1 | SQUARE 'D' NQOD 225AMP | MLO | 125 | 120/208V 3P,4W | 22-20 A, | ----- | ----- | 5-20/1 | 3-1P | SURFACE | ELECTRICAL E101 | G.E. , SIEMENS, CUTLER HAMMER | 26,803 | NONE |
| R1A 120/208V 3P,4W FED FROM M1 | R1A | SQUARE 'D' NQOD 225AMP | MLO | 125 | 120/208V 3P,4W | 7-20 A, | 1-20 A, | ----- | ----- | ----- | SURFACE | ELECTRICAL E101 | G.E. , SIEMENS, CUTLER HAMMER | 25,221 | NONE |
| R1B 120/208V 3P,4W FED FROM M1 | R1B | SQUARE 'D' NQOD 225AMP | MLO | 200 | 120/208V 3P,4W | 2-20 A, | ----- | 1-60 A, | ----- | ----- | SURFACE | RETAIL 104 | G.E. , SIEMENS, CUTLER HAMMER | 9,371 | NONE |
| R1C 120/208V 3P,4W FED FROM M1 | R1C | SQUARE 'D' NQOD 225AMP | MLO | 60 | 120/208V 3P,4W | 8-20 A, | ----- | ----- | ----- | ----- | SURFACE | IT 105 | G.E. , SIEMENS, CUTLER HAMMER | 3,360 | NONE |
| R1D 120/208V 3P,4W FED FROM M1 | R1D | SQUARE 'D' NQOD 225AMP | MLO | 200 | 120/208V 3P,4W | 17-20 A, 2-20 A GFCI, | 1-15 A, 1-20 A, 1-30 A, | 1-50 A, 1-60 A, | ----- | ----- | SURFACE | IT 105 | G.E. , SIEMENS, CUTLER HAMMER | 8,774 | NONE |
| R1E 120/208V 3P,4W FED FROM M1 | R1E | SQUARE 'D' NQOD 225AMP | MLO | 225 | 120/208V 3P,4W | ----- | ----- | ----- | ----- | ----- | SURFACE | VENDOR 102, PANEL FURNISHED WITH FEED THRU LUGS, FOR FUTURE VENDOR LOADS | G.E. , SIEMENS, CUTLER HAMMER | 12,819 | NONE |
| R1F 120/208V 3P,4W FED FROM R1E | R1F | SQUARE 'D' NQOD 225AMP | MLO | 225 | 120/208V 3P,4W | ----- | ----- | ----- | ----- | ----- | SURFACE | VENDOR 102, FOR FUTURE VENDOR LOADS | G.E. , SIEMENS, CUTLER HAMMER | 11,883 | NONE |
| R1G 120/208V 3P,4W FED FROM M1 | R1G | SQUARE 'D' NQOD 400AMP | MLO | 400 | 120/208V 3P,4W | 30-20 A, 3-20 A GFCI, | ----- | ----- | ----- | ----- | FLUSH | OPEN OFFICE 215, PANEL FURNISHED WITH FEED THRU LUGS | G.E. , SIEMENS, CUTLER HAMMER | 12,233 | NONE |
| R1H 120/208V 3P,4W FED FROM R1G | R1H | SQUARE 'D' NQOD 400AMP | MLO | 400 | 120/208V 3P,4W | 1-20 A, | 2-15 A, 10-20 A, 2-25 A, 1-30 A, 1-35 A, 1-50 A, | 1-20 A, | ----- | ----- | FLUSH | OPEN OFFICE 215 | G.E. , SIEMENS, CUTLER HAMMER | 11,945 | NONE |
| M2 120/208V 3P,4W FED FROM ECB2 | M2 | SQUARE 'D' I-LINE HCM 800AMP | MLO | 800 | 120/208V 3P,4W | ----- | ----- | 1-225 A, 1-250 A, 2-400 A, | ----- | ----- | SURFACE | ELECTRICAL E101 | G.E. , SIEMENS, CUTLER HAMMER | 22,612 | NONE |
| R2A 120/208V 3P,4W FED FROM M2 | R2A | SQUARE 'D' NQOD 400AMP | MLO | 250 | 120/208V 3P,4W | 3-20 A, 1-20 A GFCI, | 1-15 A, 4-20 A, 1-25 A, 1-40 A, | 2-45 A, 1-50 A, | ----- | ----- | SURFACE | ELECTRICAL E101 | G.E. , SIEMENS, CUTLER HAMMER | 16,890 | NONE |
| R2B 120/208V 3P,4W FED FROM M2 | R2B | SQUARE 'D' NQOD 225AMP | MLO | 225 | 120/208V 3P,4W | 2-20 A, 2-20 A GFCI, | 3-15 A, 1-20 A, 1-30 A, | 2-30 A, | ----- | ----- | SURFACE | KITCHEN 103A, PANEL FURNISHED WITH FEED THRU LUGS | G.E. , SIEMENS, CUTLER HAMMER | 12,221 | NONE |
| R2C 120/208V 3P,4W FED FROM M2 | R2C | SQUARE 'D' NF 400AMP | MLO | 400 | 120/208V 3P,4W | 3-20 A, 12-20 A GFCI, | 5-20 A, | 2-20 A, 1-30 A, 2-50 A ST, | ----- | ----- | SURFACE | KITCHEN 103A | G.E. , SIEMENS, CUTLER HAMMER | 20,758 | NONE |
| R2D 120/208V 3P,4W FED FROM M2 | R2D | SQUARE 'D' NQOD 400AMP | MLO | 400 | 120/208V 3P,4W | 20-20 A GFCI, | 1-20 A, | 4-50 A ST, 2-80 A ST, | ----- | ----- | SURFACE | KITCHEN 103A | G.E. , SIEMENS, CUTLER HAMMER | 35,178 | NONE |

EE Group Inc.
gadsden
TEL: (256)413-7717
FAX: (256)413-7789
WEB: WWW.EEGRPINC.COM
Job No. 4643
Plot Date: Mar 17, 2021 5:04:57 pm

ALABAMA REGISTERED No. 21242 PROFESSIONAL ENGINEER JACK R. MORGAN 3/19/21

NOLA VANPEURSEM ARCHITECTS, PC
MEMBER OF THE AMERICAN INSTITUTE OF ARCHITECTS
301 JEFFERSON STREET
HUNTSVILLE, ALABAMA 35801
(256) 533-6617
NVPARCHITECTS.COM

THIS DRAWING MAY NOT BE REPRODUCED IN WHOLE OR IN PART WITHOUT THE CONSENT OF NOLA|VANPEURSEM ARCHITECTS

ALABAMA A&M UNIVERSITY
**WELCOME CENTER**
4900 MERIDIAN ST.
HUNTSVILLE, ALABAMA

JOB NUMBER
18994

| DRAWN | CHECKED | DATE |
|---|---|---|
| JRM | JRM | 1/25/2021 |

REVISIONS

| No. | Description | Date |
|---|---|---|
| 1 | ADDENDUM#2 | 2/12/21 |
| 2 | ADDENDUM#3 | 3/19/21 |

SHEET TITLE
**ELECTRICAL PANELBOARD SCHEDULE**

SHEET NUMBER
E-2.1
OF

EE Group Inc.
gadsden
TEL: (256)413-7717
FAX: (256)413-7789
WEB: WWW.EEGRPINC.COM

Job No. 4643

Plot Date: Mar 17, 2021 5:05:18 pm

SPECIAL NOTE:

1. ADDITIONAL METERING WAS NOT INCLUDED FOR ELECTRICAL ENERGY MONITORING BASED ON EXCEPTION TO ASHRAE 90.1 (2013) 8.4.3.1 AND 2 AS BUILDING IS LESS THAN 25,000 SQUARE FEET AT 15,916 SQUARE FEET TOTAL

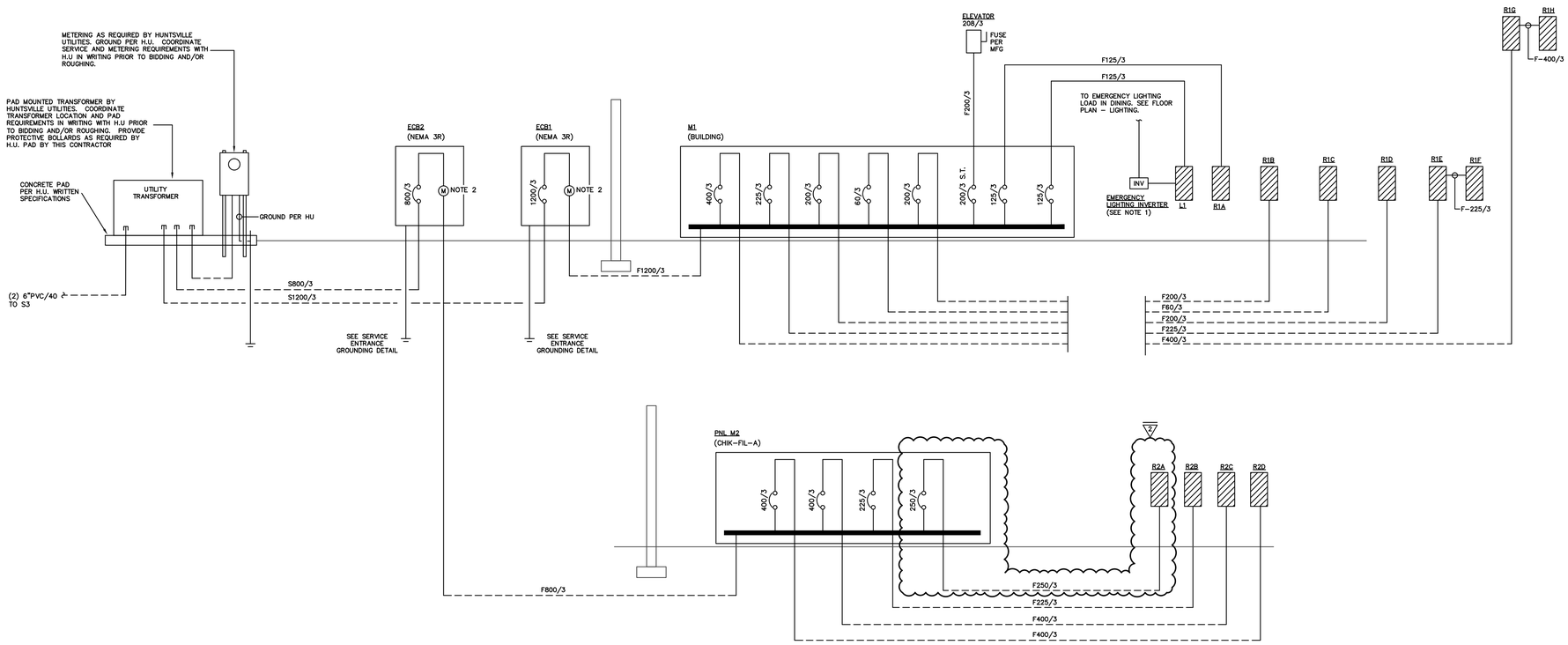


## SINGLE LINE DIAGRAM

NOT TO SCALE

SINGLE LINE DIAGRAM NOTES:

1. FURNISH AND INSTALL EMERGENCY LIGHTING INVERTER (LVS# CEPS-A-500-120-1) COMPLETE WITH UL924 CONTROL FOR EMERGENCY LIGHTING. INVERTER SHALL BE IN ELECTRICAL ROOM ADJACENT TO PANEL. INSTALL TEST AND COMMISSION PER MANUFACTERERS RECOMMENDATIONS.
2. FURNISH AND INSTALL 1 EACH CAT6 CABLE IN 1"C FROM DIGITAL METER LOCATION TO IT 105 AND CONNECT TO LAN AS REQUIRED FOR METER MONITORING

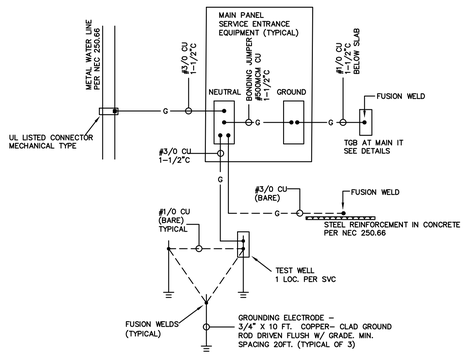


## SERVICE ENTRANCE GROUNDING

NOT TO SCALE

NOTES:

1. BOND METAL PIPING SYSTEMS INCLUDING GAS PIPING TO THE SERVICE EQUIPMENT ENCLOSURE PER NEC 250.104(B), SIZED PER 250.122 BASED ON THE SIZE OF THE CIRCUIT SUPPLYING THE EQUIPMENT.

## CONDUCTOR SCHEDULE

| FEEDER TAG | CONDUCTOR AND CONDUIT |
|---|---|
| S800/3 | 2 RUNS (4#600 MCM, 4"C) |
| S1200/3 | 4 RUNS (4#350 MCM, 3"C) |
| F60/3 | 4#6, 1#10G, 1-1/4"C |
| F100/3 | 4#3, 1#8G, 1-1/4"C |
| F125/3 | 4#1, 1#6G, 2"C |
| F200/3 | 4#3/0, 1#6G, 2-1/2"C |
| F225/3 | 4#4/0, 1#4G, 3"C |
| F400/3 | 4#600 MCM, 1#3G, 4"C |
| F800/3 | 2 RUNS (4#600 MCM, 1#1/0G, 4"C) |
| F1200/3 | 4 RUNS (4#350 MCM, 1#3/0, 3-1/2"C) |
| F250/3 | 4#250MCM, 1#4G, 3"C |

NOLA VANPEURSEM
ARCHITECTS, PC
MEMBER OF THE AMERICAN INSTITUTE OF ARCHITECTS
301 JEFFERSON STREET
HUNTSVILLE, ALABAMA 35801
(256) 532-6617
NVPARCHITECTS.COM

THIS DRAWING MAY NOT BE REPRODUCED IN WHOLE OR IN PART WITHOUT THE CONSENT OF NOLA|VANPEURSEM ARCHITECTS

ALABAMA A&M UNIVERSITY

# WELCOME CENTER

4900 MERIDIAN ST.
HUNTSVILLE, ALABAMA

JOB NUMBER
18994

JRM / JRM / 1/25/2021
DRAWN - CHECKED - DATE

REVISIONS

| No. | Description | Date |
|---|---|---|
| 1 | ADDENDUM#2 | 2/12/21 |
| 2 | ADDENDUM#3 | 3/19/21 |

SHEET TITLE
**ELECTRICAL SINGLE LINE DIAGRAM**

SHEET NUMBER
E-3.0
OF

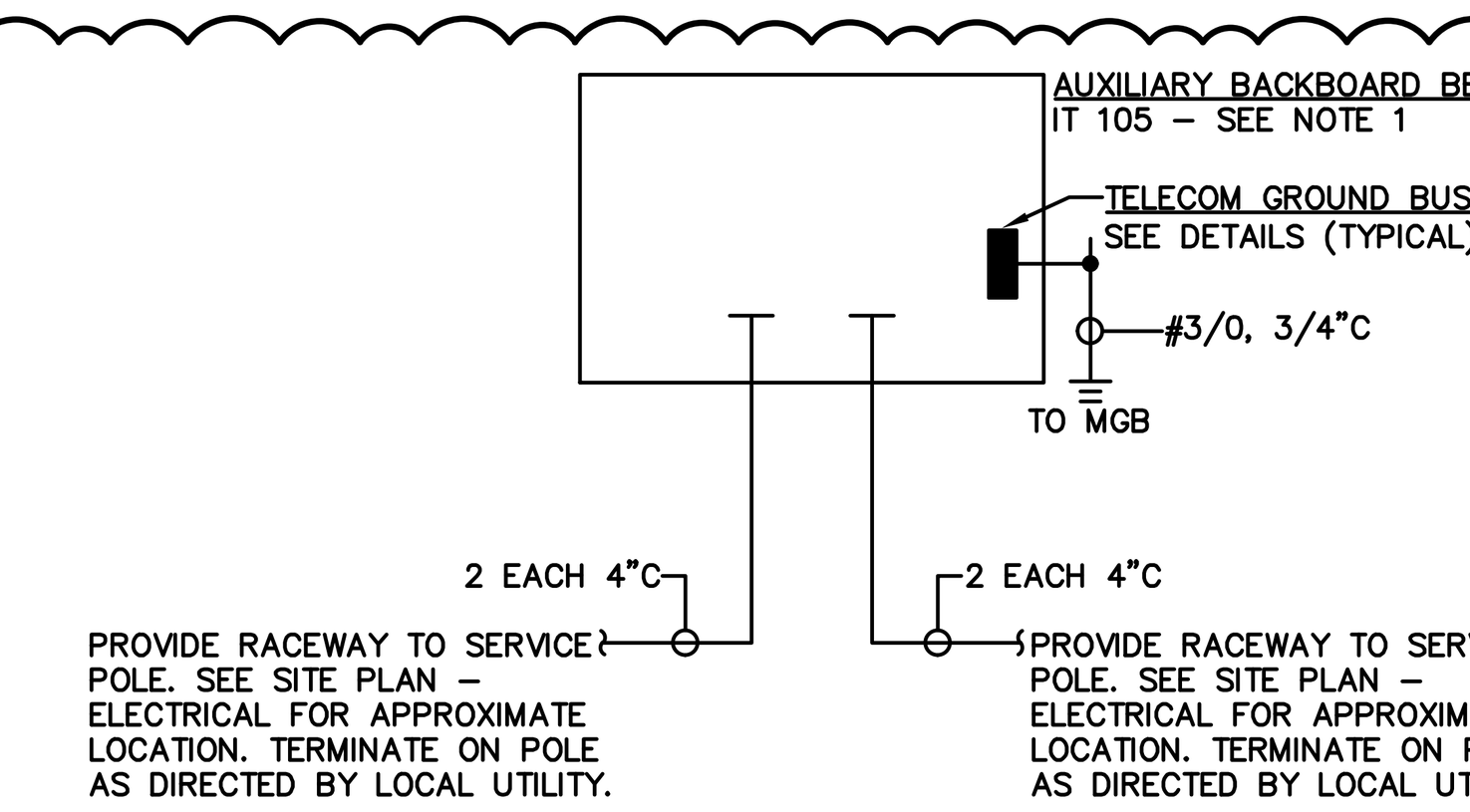


## DETAIL: AUXILIARY RISER

NOT TO SCALE

AUXILIARY RISER NOTES:

1. AUXILIARY BACKBOARD BB-1. SEE FLOOR PLANS FOR LOCATION. FURNISH AND INSTALL ALL EQUIPMENT AS LISTED BELOW/ REQUIRED:
   - FLOOR MOUNTED SWING RACK (MIDDLE ATLANTIC# SR-40-28) COMPLETE WITH VENTED FRONT DOOR AND INTERNAL VERTICAL WIRE MANAGEMENT.
   - 48 PORT PATCH PANEL SHALL BE PANDUIT# CPPKL6ATG48WBL (48-PORT, CAT6A, MODULAR PATCH PANEL) WITH CAT6A 'TG' JACKS (ORANGE JACKS FOR VIDEO SURVEILLANCE, GREEN JACKS FOR REMAINDER). PROVIDE QUANTITY AT EACH LOCATION AS REQUIRED FOR ALL HORIZONTAL DATA AND VOICE CABLE TERMINATIONS WITH ADDITIONAL SPACE FOR 10% FUTURE GROWTH.
   - 1 RACK UNIT HORIZONTAL CABLE MANAGER SHALL BE PANDUIT# NCMH1. PROVIDE QUANITY AT EACH LOCATION AS REQUIRED FOR ALL HORIZONTAL DATA AND VOICE CABLE TERMINATIONS WITH ADDITIONAL SPACE FOR 10% FUTURE GROWTH. PROVIDE 2 RACK UNITS OF HORIZONTAL CABLE MANAGEMENT PER EACH 24 PATCH OR SWITCH PORTS (ABOVE OR BELOW ASSOCIATED PATCH PANEL). ASSUME 1 SWITCH PORT FOR EACH PATCH PORT.
   - 2 RACK UNIT HORIZONTAL CABLE MANAGER SHALL BE PANDUIT# NCMH2. PROVIDE QUANITY AT EACH LOCATION AS REQUIRED FOR ALL HORIZONTAL DATA AND VOICE CABLE TERMINATIONS WITH ADDITIONAL SPACE FOR 10% FUTURE GROWTH. PROVIDE 2 RACK UNITS OF HORIZONTAL CABLE MANAGEMENT PER EACH 24 PATCH OR SWITCH PORTS (ABOVE OR BELOW ASSOCIATED PATCH PANEL). ASSUME 1 SWITCH PORT FOR EACH PATCH PORT.
   - RACK GROUNDING KIT SHALL BE HOFFMAN# PGK. PROVIDE 1 PER RACK AND CONNECT TO TELECOM GROUND BAR (#6 AWG).
   - RACK GROUND BUS SHALL BE HOFFMAN# PGS4K. PROVIDE 1 PER RACK AND CONNECT TO TELECOM GROUND BAR (#6 AWG).
   - RACK MOUNT FIBER CABINETS. CABINET SHALL BE PANDUIT# FCE1U COMPLETE WITH "LC" ADAPTER PANELS AS REQUIRED TO TERMINATE ALL FIBER PAIRS.
   - AT EACH CABINET PROVIDE, AT A MINIMUM, THE FOLLOWING ACCESSORIES: COLOR CODED CABLE MANAGEMENT STRAPS (TO COORDINATE COLOR SCHEME WITH OWNER PRIOR TO ORDERING), CONDUIT NIPPLE FOR ALL HORIZONTAL AND BACKBONE ENTRIES INTO RACK, 2 EACH HORIZONTAL POWER STRIPS (20AMP, 12 POSITION, WITH AMP METER – NO SWITCH), EQUIPMENT GROUND ASSEMBLY AND LADDER RACK SUPPORT.
   - FOR EACH RACK/ CABINET, FURNISH AND INSTALL ONE (1) EACH UPS (FURNISHED BY OWNER UNDER ALLOWANCE). 1 UPS PER RACK.
   - NETWORK SWITCHES TO BE FURNISHED UNDER ALLOWANCE. NETWORK SWITCHES TO BE INSTALLED BY STRUCTURED CABLING CONTRACTOR. NETWORK SWITCHES TO BE SET-UP AND PROGRAMMED BY OWNER.
   - STRUCTURED CABLING CONTRACTOR SHALL PROVIDE CABLING TO ACCESS CONTROL SYSTEM HEAD-END EQUIPMENT TO ALLOW FOR CONNECTION TO LAN. STRUCTURED CABLING CONTRACTOR SHALL INCLUDE IN BID PRICE ANY/ ALL CHARGES FROM ACCESS CONTROL CONTRACTOR FOR CONNECTION OF ACCESS CONTROL SYSTEM TO LAN AS WELL AS CONNECTION TO, AND INTEGRATION WITH CAMPUS WIDE ACCESS CONTROL SYSTEM. STRUCTURED CABLING CONTRACTOR SHALL INCLUDE IN BID PRICE ANY/ ALL CHARGES FROM ACCESS CONTROL CONTRACTOR FOR ANY/ ALL ADDITIONAL EQUIPMENT, CONNECTIONS, PROGRAMMING, ETC FOR CONNECTION TO/ INTEGRATION WITH EXISTING CAMPUS-WIDE ACCESS CONTROL SYSTEM.
2. ROUTE CONDUITS (SIZE AND QUANTITIES AS INDICATED) TO CABLE TRAY IN CORRIDOR AND TERMINATE WITH SMOOTH BUSHING. SLEEVE THROUGH WALL WITH STI EZ PATH FARE RATED SLEEVES.
3. CONDUIT SLEEVE – FURNISH AND INSTALL STI EZ PATH FIRE RATED SLEEVES (OR EQUAL) AT ALL RATED CABLE PENETRATIONS (WALLS AND FLOORS). FIRE CAULK OR WOOL WILL NOT BE ACCEPTABLE. SEE FLOOR PLANS FOR SLEEVE ROUTING.

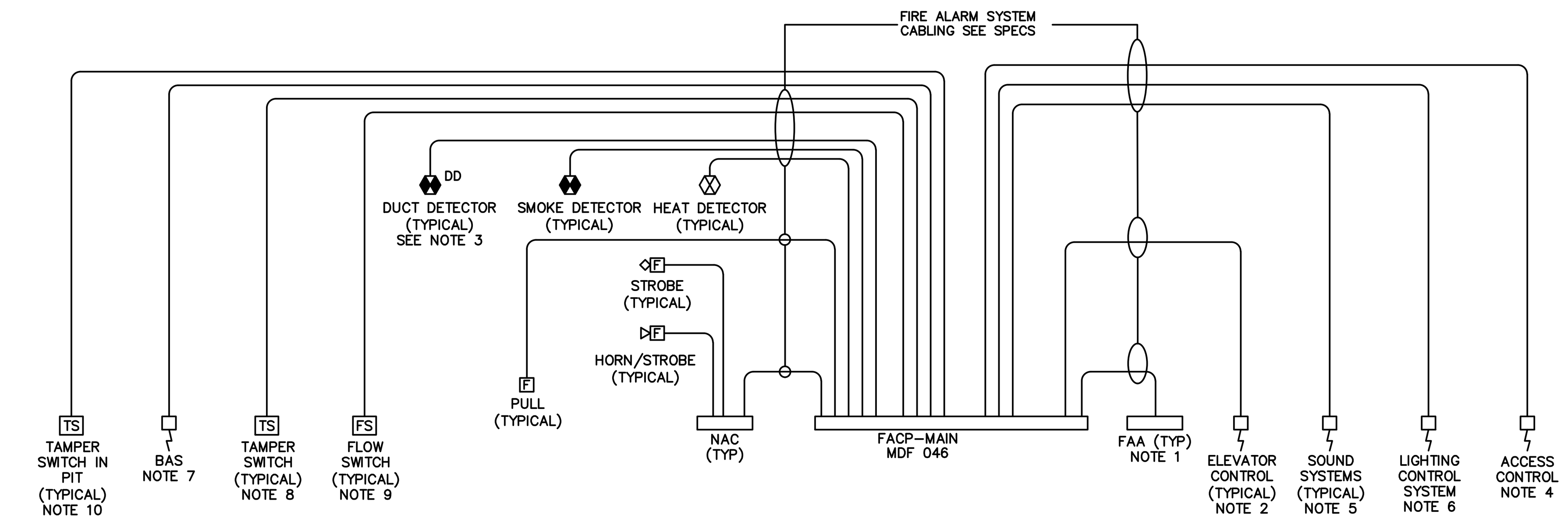


## FIRE ALARM SYSTEM RISER

SCALE: NOT TO SCALE

FIRE ALARM SYSTEM RISER NOTES:

1. FIRE ALARM ANNUNCIATOR (TYPICAL). SEE FIRE ALARM LEGEND. SEE FLOOR PLANS FOR LOCATIONS.
2. CONNECT FIRE ALARM SYSTEM TO ALL ELEVATOR CONTROLLERS (ELEV 1, 2 AND 3) AS REQUIRED FOR ELEVATOR CAPTURE AND RECALL. FURNISH AND INSTALL ALL ADDITIONAL RELAYS, POWER SUPPLIES, CONTROL MODULES, ETC. AS REQUIRED. COORDINATE WITH ELEVATOR CONTRACTOR FOR REQUIRED CONNECTIONS.
3. CONNECT ALL DUCT MOUNTED SMOKE DETECTORS TO FIRE ALARM SYSTEM AS REQUIRED FOR UNIT SHUTDOWN. FURNISH AND INSTALL ALL ADDITIONAL RELAYS, POWER SUPPLIES, CONTROL MODULES, ETC. AS REQUIRED. COORDINATE WITH CONTROLS CONTRACTOR FOR REQUIRED CONNECTIONS.
4. CONNECT FIRE ALARM SYSTEM TO SECURITY/ ACCESS CONTROL SYSTEM PANEL AS REQUIRED TO PROVIDE SECURITY SYSTEM TROUBLE, SUPERVISORY AND ALARM NOTIFICATION. FURNISH AND INSTALL ALL ADDITIONAL RELAYS, POWER SUPPLIES, CONTROL MODULES, ETC. AS REQUIRED. COORDINATE WITH SECURITY SYSTEM CONTRACTOR FOR REQUIRED CONNECTIONS.
5. CONNECT FIRE ALARM SYSTEM TO EACH SOUND SYSTEM AS REQUIRED TO MUTE SOUND SYSTEM IN A FIRE ALARM/ MASS NOTIFICATION PUBLIC NOTIFICATION EVENT. FURNISH AND INSTALL ALL ADDITIONAL RELAYS, POWER SUPPLIES, CONTROL MODULES, ETC. AS REQUIRED. CONNECTIONS REQUIRED IN DATA 223, DATA E204, SOUND MEDIA E104C, TV BROADCAST BOOTH 137B, MEETING ROOM 107A, MEETING ROOM 107B, TIERED MEETING ROOM 108A. COORDINATE WITH SOUND SYSTEM CONTRACTOR FOR REQUIRED CONNECTIONS.
6. CONNECT FIRE ALARM SYSTEM TO LIGHTING CONTROL SYSTEM AS REQUIRED SUCH THAT CONTROLLED LIGHTING IS TRANSITIONED TO "ON" AND FULL BRIGHT IN A FIRE ALARM/ MASS NOTIFICATION PUBLIC NOTIFICATION EVENT. FURNISH AND INSTALL ALL ADDITIONAL RELAYS, POWER SUPPLIES, CONTROL MODULES, ETC. AS REQUIRED. COORDINATE WITH LIGHTING CONTROL SYSTEM CONTRACTOR FOR REQUIRED CONNECTIONS.
7. CONNECT FIRE ALARM SYSTEM TO BUILDING AUTOMATION SYSTEM (BAS) AS REQUIRED FOR UNIT SHUTDOWN. FURNISH AND INSTALL ALL ADDITIONAL RELAYS, POWER SUPPLIES, CONTROL MODULES, ETC. AS REQUIRED. COORDINATE WITH CONTROLS CONTRACTOR FOR REQUIRED CONNECTIONS.
8. CONNECTION FOR FIRE PROTECTION TAMPER SWITCH. FURNISH AND INSTALL ALL ADDITIONAL RELAYS, POWER SUPPLIES, CONTROL MODULES, ETC. AS REQUIRED. COORDINATE WITH FIRE PROTECTION CONTRACTOR FOR REQUIRED CONNECTIONS. SEE FIRE PROTECTION PLANS FOR LOCATIONS AND QUANTITIES.
9. CONNECTION FOR FIRE PROTECTION FLOW SWITCH. FURNISH AND INSTALL ALL ADDITIONAL RELAYS, POWER SUPPLIES, CONTROL MODULES, ETC. AS REQUIRED. COORDINATE WITH FIRE PROTECTION CONTRACTOR FOR REQUIRED CONNECTIONS. SEE FIRE PROTECTION PLANS FOR LOCATIONS AND QUANTITIES.
10. CONNECTION FOR FIRE PROTECTION TAMPER SWITCH LOCATED IN FIRE VAULT. FURNISH AND INSTALL ALL ADDITIONAL RELAYS, POWER SUPPLIES, CONTROL MODULES, ETC. AS REQUIRED. COORDINATE WITH FIRE PROTECTION CONTRACTOR FOR REQUIRED CONNECTIONS. SEE FIRE PROTECTION PLANS FOR LOCATIONS AND QUANTITIES. COORDINATE EXACT LOCATION OF FIRE PROTECTION TAMPER SWITCHES IN VAULT WITH CIVIL DRAWINGS PRIOR TO BIDDING.

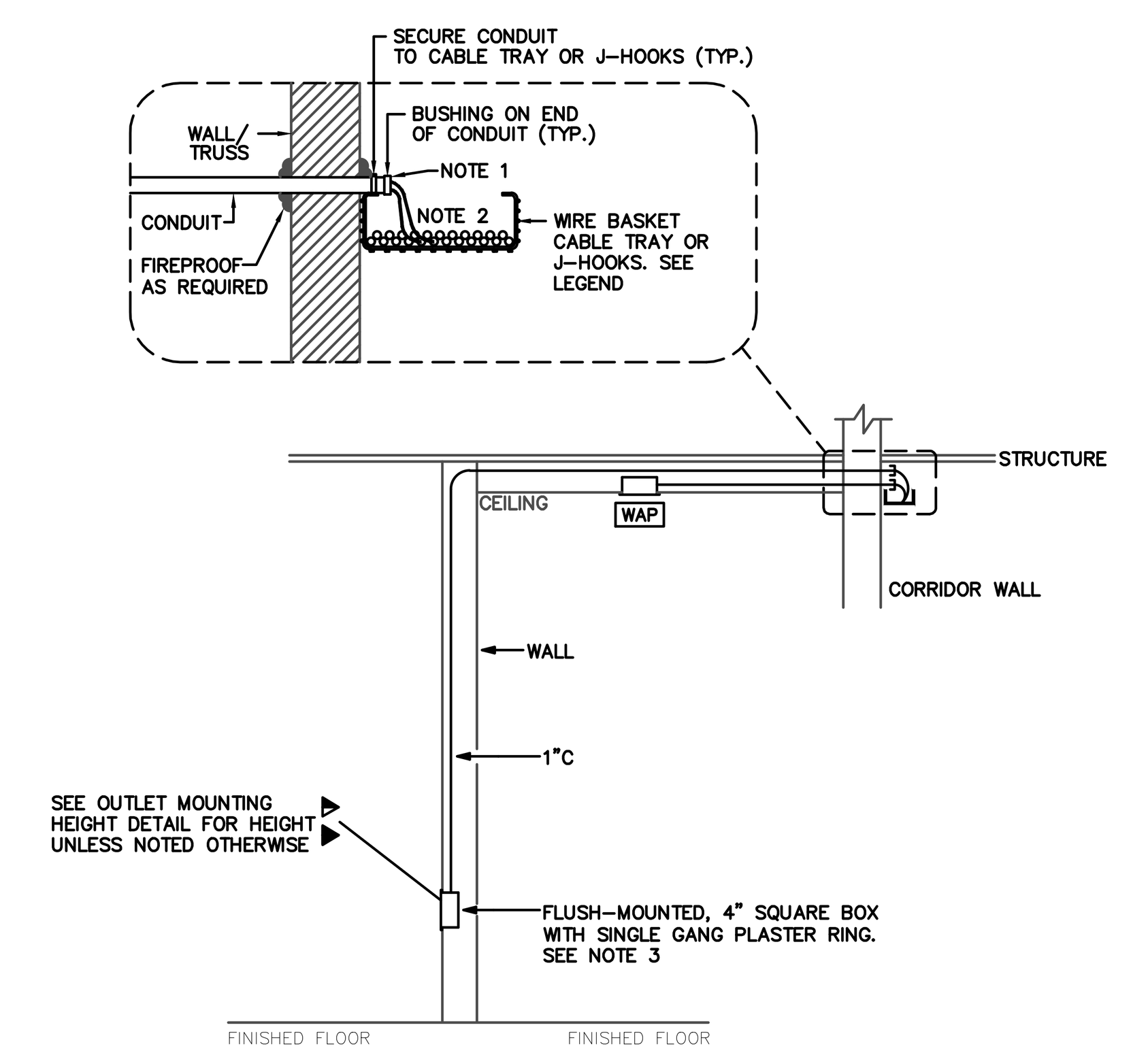


## DETAIL: AUXILIARY OUTLET

NOT TO SCALE

AUXILIARY OUTLET DETAIL NOTES

1. ROUTE ALL AUXILIARY CONDUITS TO NEAREST J-HOOK PATH/ CABLE TRAY PATH (SEE PLANS FOR RACEWAY LOCATIONS)/ CONDUIT SLEEVE/ AUXILIARY BACKBOARD AND TERMINATE WITH SMOOTH BUSHING. LABEL ALL CONDUITS PER SPECIFICATIONS. PROVIDE PULL WIRE IN ALL CONDUITS.
2. ALL DATA/ VOICE CABLES SHALL BE ROUTED TO AUXILIARY BACKBOARD BB-1 VIA CONDUIT/ CONDUIT SLEEVES/ J-HOOKS/ CABLE TRAY AND TERMINATED AS DIRECTED BY OWNER. ALL CABLES, BOTH ENDS, SHALL BE LABELED AND TERMINATED PER SPECS/ AS DIRECTED BY OWNER.
3. AUXILIARY OUTLETS SHALL BE MOUNTED AT +16" ABOVE FINISHED FLOOR (UNLESS SHOWN OTHERWISE) AND SHALL BE CONFIGURED AS FOLLOWS WITH DEVICE, PLATE AND ICON COLORS AS DIRECTED BY ARCHITECT.

DATA/ VOICE OUTLET (2 DATA) – SURFACE MOUNTED SINGLE-GANG BOX. FURNISH AND INSTALL TWO (2) EACH CAT6A CONNECTORS (PANDUIT# CJ6X88TGGR) WITH DATA ICONS FOR EACH DATA JACK, ONE EACH FACEPLATE (PANDUIT# CFPL4SY) WITH TWO (2) EACH BLANKS. FURNISH AND INSTALL TWO (2) EACH CAT6A PLENUM RATED CABLES (PANDUIT# PUP6AM04GR-UG) FROM OUTLET TO SPECIFIED BACKBOARD (SEE DETAIL NOTE 2) VIA CONDUIT, J-HOOKS, SLEEVES AND/ OR CABLE TRAY. ALL CABLES SHALL BE TERMINATED, BOTH ENDS, AS DIRECTED BY OWNER.

CC — CEILING DATA OUTLET (2 DATA) – FLUSH MOUNTED SINGLE GANG BOX. FURNISH AND INSTALL TWO (2) EACH CAT6A CONNECTORS (PANDUIT# CJ6X88TGGR) TERMINATED ABOVE CEILING FOR CONNECTION TO VIDEO SURVEILLANCE CAMERAS WITH DATA ICONS FOR EACH DATA JACK. FURNISH AND INSTALL TWO (2) EACH CAT6A PLENUM RATED CABLES (PANDUIT# PUP6AM04GR-UG) FROM OUTLET TO SPECIFIED BACKBOARD (SEE DETAIL NOTE 2) VIA CONDUIT, J-HOOKS, SLEEVES AND/ OR CABLE TRAY. ALL CABLES SHALL BE TERMINATED, BOTH ENDS, AS DIRECTED BY OWNER. CAMERAS AND THEIR ASSOCIATED LICENSES TO BE FURNISHED UNDER ALLOWANCE. CAMERAS TO BE INSTALLED, SET-UP, PROGRAMMED AND CONNECTED BY VIDEO SURVEILLANCE SYSTEM CONTRACTOR. PROVIDE A MINIMUM 25FT SERVICE LOOP AT CABLE TRAY FOR EACH CAMERA.

CW — WALL DATA OUTLET (2 DATA) – FLUSH MOUNTED SINGLE GANG BOX. FURNISH AND INSTALL TWO (2) EACH CAT6A CONNECTORS (PANDUIT# CJ6X88TGGR) TERMINATED ABOVE CEILING FOR CONNECTION TO VIDEO SURVEILLANCE CAMERAS WITH DATA ICONS FOR EACH DATA JACK. FURNISH AND INSTALL TWO (2) EACH CAT6A PLENUM RATED CABLES (PANDUIT# PUP6AM04GR-UG) FROM OUTLET TO SPECIFIED BACKBOARD (SEE DETAIL NOTE 2) VIA CONDUIT, J-HOOKS, SLEEVES AND/ OR CABLE TRAY. ALL CABLES SHALL BE TERMINATED, BOTH ENDS, AS DIRECTED BY OWNER. CAMERAS AND THEIR ASSOCIATED LICENSES TO BE FURNISHED UNDER ALLOWANCE. CAMERAS TO BE INSTALLED, SET-UP, PROGRAMMED AND CONNECTED BY VIDEO SURVEILLANCE SYSTEM CONTRACTOR. PROVIDE A MINIMUM 25FT SERVICE LOOP AT CABLE TRAY FOR EACH CAMERA.

WAP — CEILING DATA OUTLET (2 DATA) FOR WIRELESS ACCESS POINT – IN AREAS WITH EXPOSED STRUCTURE, SURFACE MOUNTED SINGLE-GANG BOX (MOUNTED TO STRUCTURE). IN AREAS WITH CEILING, FLUSH-MOUNTED SINGLE GANG BOX. FOR BOTH CONDITIONS, FURNISH AND INSTALL TWO (2) EACH CAT6A CONNECTORS (PANDUIT# CJ6X88TGGR) WITH DATA ICONS FOR EACH DATA JACK, ONE EACH FACEPLATE (PANDUIT# CFPL4SY) WITH TWO (2) EACH BLANKS. FURNISH AND INSTALL TWO (2) EACH CAT6A PLENUM RATED CABLES (PANDUIT# PUP6AM04GR-UG) FROM OUTLET TO SPECIFIED BACKBOARD (SEE DETAIL NOTE 2) VIA CONDUIT, J-HOOKS, SLEEVES AND/ OR CABLE TRAY. ALL CABLES SHALL BE TERMINATED, BOTH ENDS, AS DIRECTED BY OWNER. WIRELESS ACCESS POINTS (WIRELESS ROUTERS) AND THEIR ASSOCIATED CONTROLLERS TO BE FURNISHED UNDER ALLOWANCE. WIRELESS ACCESS POINTS (WIRELESS ROUTERS) AND THEIR ASSOCIATED CONTROLLERS TO BE INSTALLED, SET-UP, PROGRAMMED AND CONNECTED BY STRUCTURED CABLING CONTRACTOR. PROVIDE A MINIMUM 25FT SERVICE LOOP AT CABLE TRAY FOR EACH ACCESS POINT.

TV — TV OUTLET (2 DATA) WITH ADDITIONAL EMPTY BOX (COORDINATE EXACT HEIGHT WITH FINAL ARCHITECTURAL ELEVATIONS) – SURFACE MOUNTED SINGLE-GANG BOX FOR DATA. FURNISH AND INSTALL TWO (2) EACH CAT6A CONNECTORS (PANDUIT# CJ6X88TGGR) WITH DATA ICONS FOR EACH DATA JACK, ONE EACH FACEPLATE (PANDUIT# CFPL4SY) WITH TWO (2) EACH BLANKS. FURNISH AND INSTALL TWO (2) EACH CAT6A PLENUM RATED CABLES (PANDUIT# PUP6AM04GR-UG) FROM OUTLET TO SPECIFIED BACKBOARD (SEE DETAIL NOTE 2) VIA CONDUIT, J-HOOKS, SLEEVES AND/ OR CABLE TRAY. ALL CABLES SHALL BE TERMINATED, BOTH ENDS, AS DIRECTED BY OWNER. FURNISH AND INSTALL ADDITIONAL FLUSH-MOUNTED 4" SQUARE BOX WITH 1"C (EMPTY) TO ABOVE CEILING, TERMINATE WITH SMOOTH BUSHING AND LABEL PER SPECIFICATIONS.

SPECIAL NOTES:
ALL DROP LOCATIONS TO BE VERIFIED BY OWNER PRIOR TO ANY ROUGHING. COORDINATE WITH IT DEPARTMENT FOR EXACT LOCATION AND CABLE QUANTITY PER LOCATION PRIOR TO ANY ROUGHING.

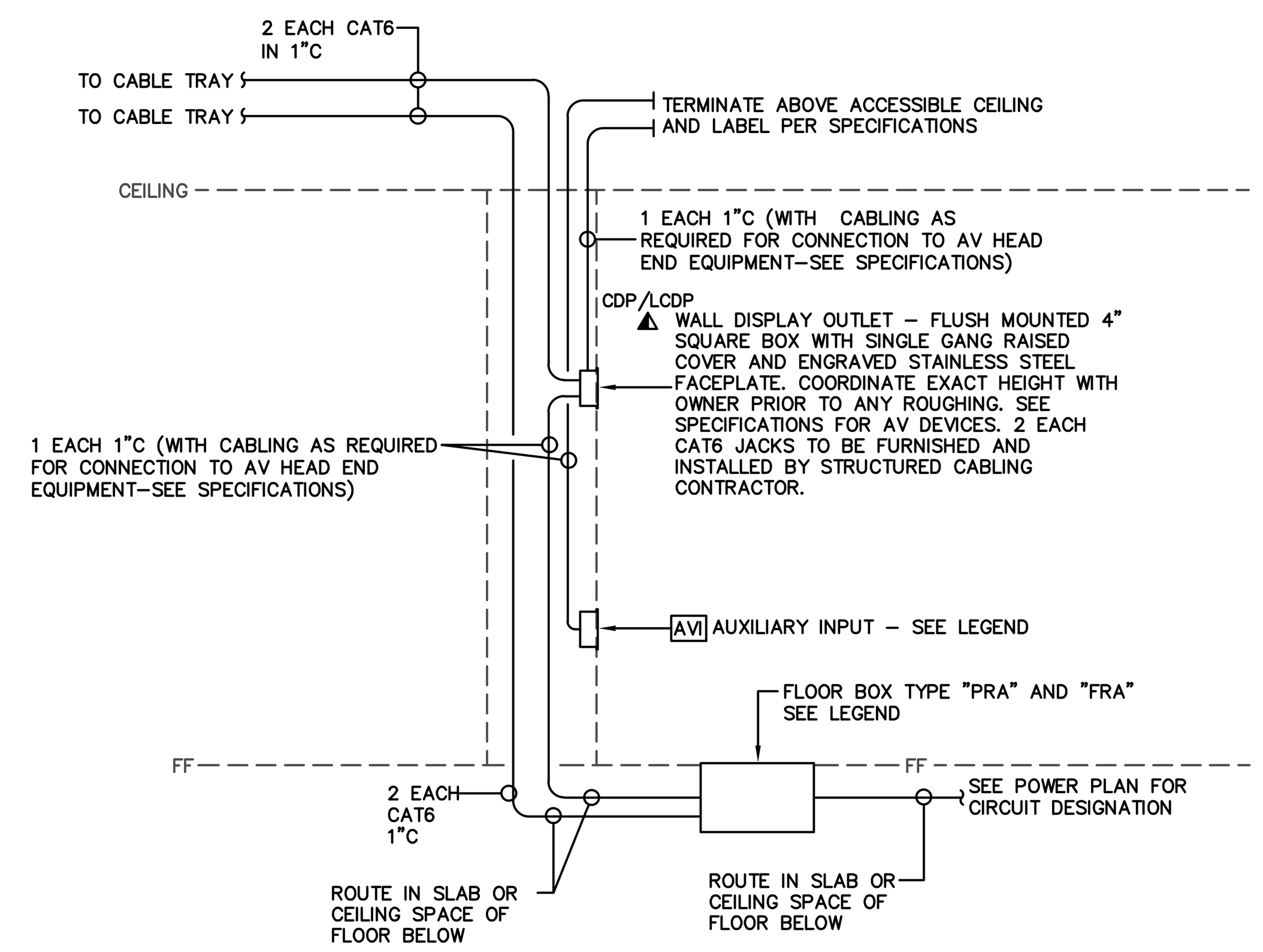


## DETAIL: FLOOR BOX TYPE "PRA" AND "FRA"

NOT TO SCALE

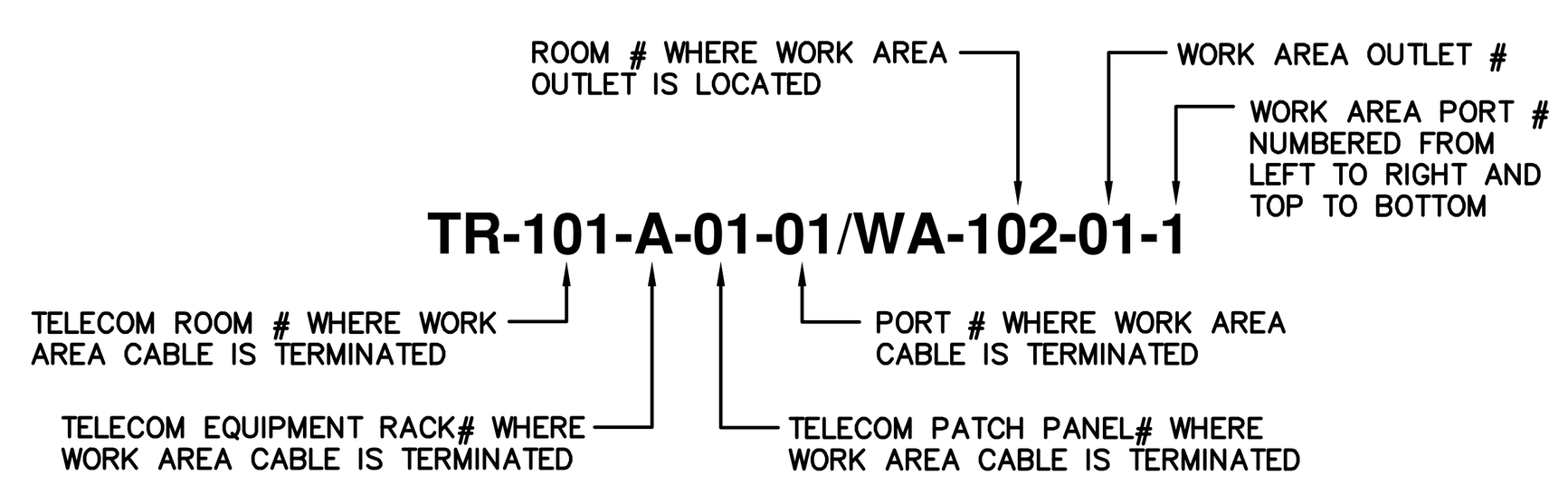


## DETAIL: AUXILIARY LABELING EVERY 50ft ON CENTER

NOT TO SCALE

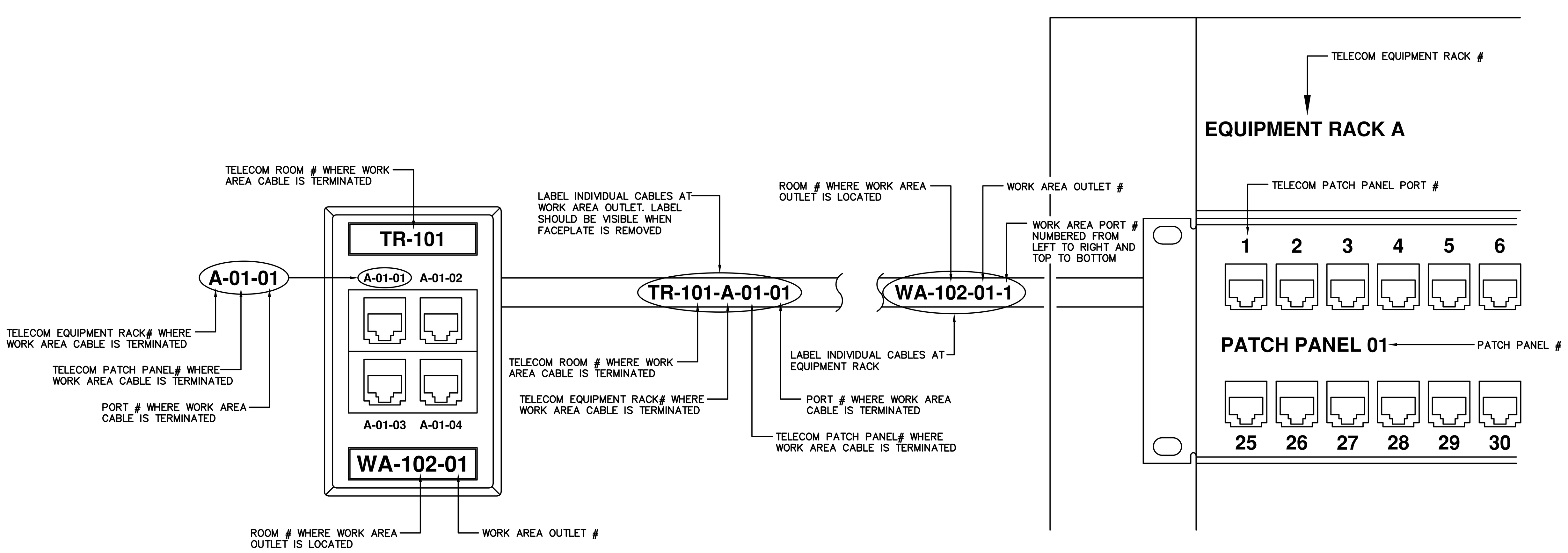


## DETAIL: AUXILIARY LABELING

NOT TO SCALE

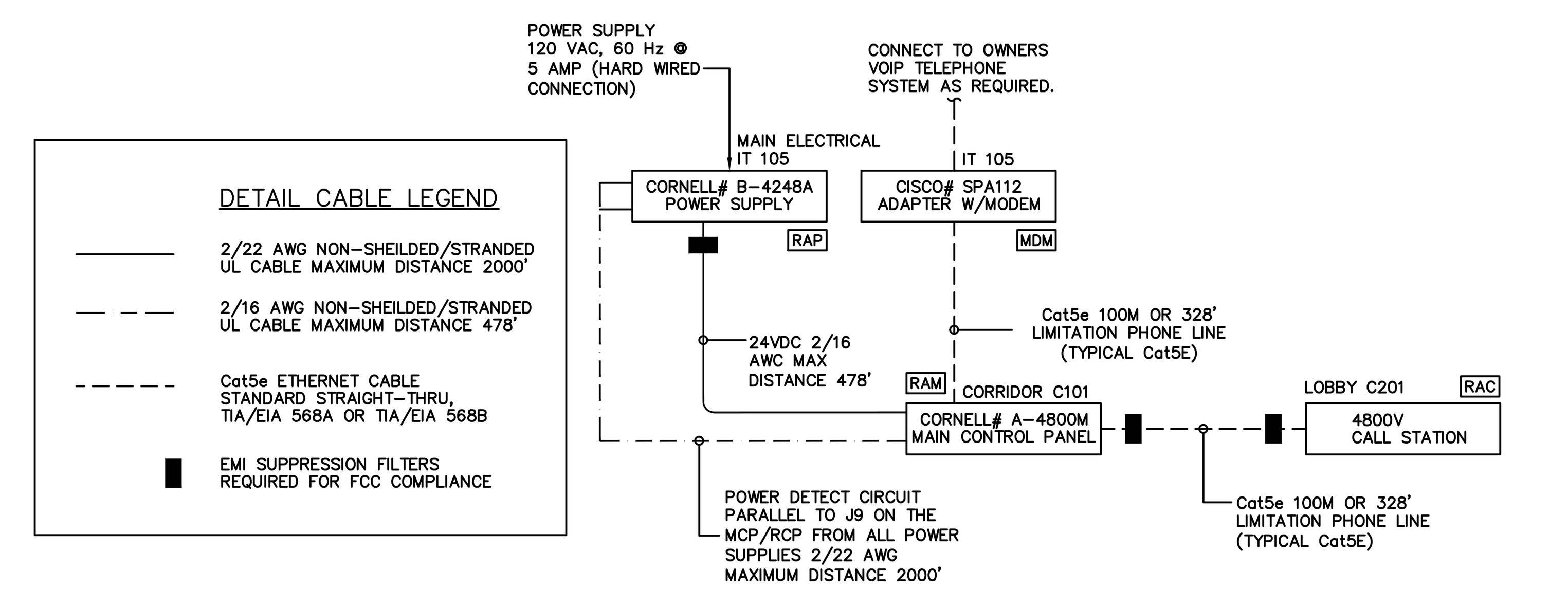


## DETAIL: AREA OF RESCUE ASSISTANCE BLOCK DIAGRAM

NOT TO SCALE

## AREA OF RESCUE ASSISTANCE SYSTEM LEGEND

RAM AREA OF RESCUE ASSISTANCE MAIN CONTROL PANEL WITH POWER SUPPLY (+48" A.F.F. TO BOTTOM). SEE AREA OF RESCUE ASSISTANCE BLOCK DIAGRAM. FLUSH MOUNTED

RAR AREA OF RESCUE ASSISTANCE REMOTE CONTROL PANEL WITH POWER SUPPLY. SEE AREA OF RESCUE ASSISTANCE BLOCK DIAGRAM.

RAC AREA OF RESCUE ASSISTANCE CALL STATION (+36" A.F.F. TO BOTTOM). SEE AREA OF RESCUE ASSISTANCE BLOCK DIAGRAM. FLUSH MOUNTED

MDM AREA OF RESCUE ASSISTANCE ADAPTER MODEM. SEE AREA OF RESCUE ASSISTANCE BLOCK DIAGRAM.


EE Group Inc.
gadsden
TEL: (256)413-7717
FAX: (256)413-7789
WEB: WWW.EEGRPINC.COM
Job No. 4643
Plot Date: Mar 17, 2021 5:05:48 pm


ALABAMA REGISTERED No. 21242 PROFESSIONAL ENGINEER JACK R. MORGAN JR. 3/19/21


NOLA VANPEURSEM
ARCHITECTS, PC
MEMBER OF THE AMERICAN INSTITUTE OF ARCHITECTS
301 JEFFERSON STREET
HUNTSVILLE, ALABAMA 35801
(256) 533-6617
NVPARCHITECTS.COM



THIS DRAWING MAY NOT BE REPRODUCED IN WHOLE OR IN PART WITHOUT THE CONSENT OF NOLA|VANPEURSEM ARCHITECTS


ALABAMA A&M UNIVERSITY
**WELCOME CENTER**
4900 MERIDIAN ST
HUNTSVILLE, ALABAMA

JOB NUMBER
18994

JRM / JRM / 1/25/2021
DRAWN - CHECKED - DATE

REVISIONS

| No. | Description | Date |
|---|---|---|
| 1 | ADDENDUM#2 | 2/12/21 |
| 2 | ADDENDUM#3 | 3/19/21 |

SHEET TITLE
**AUXILIARY DETAILS 1**

SHEET NUMBER
E-5.0
OF

EE Group Inc.
gadsden
TEL: (256)413-7717
FAX: (256)413-7789
WEB: WWW.EEGRPINC.COM

Job No. 4643

Plot Date: Mar 17, 2021 5:12:28 pm

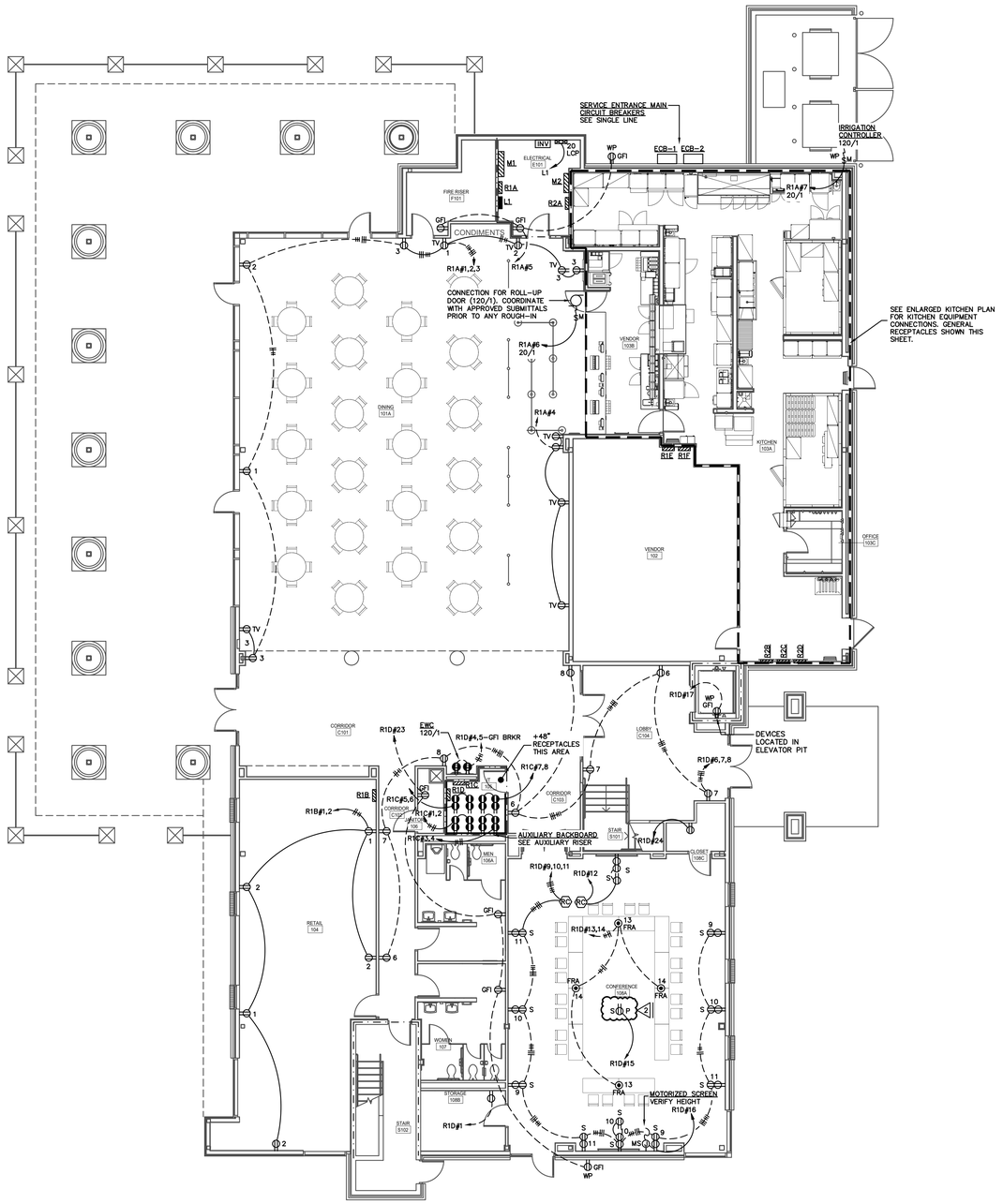


## FIRST FLOOR PLAN - POWER

SCALE: 1/8" = 1'-0"

EE Group Inc.
gadsden
TEL: (256)413-7717
FAX: (256)413-7789
WEB: WWW.EEGRPINC.COM

Job No. 4643

Plot Date: Mar 17, 2021 5:12:28 pm

ALABAMA
REGISTERED
No. 21242
PROFESSIONAL ENGINEER
JACK R. MORGAN
3/19/21

NOLA VANPEURSEM
ARCHITECTS, PC
MEMBER OF THE AMERICAN INSTITUTE OF ARCHITECTS
301 JEFFERSON STREET
HUNTSVILLE, ALABAMA 35801
(256) 533-6617
NVPARCHITECTS.COM

THIS DRAWING MAY NOT BE REPRODUCED IN WHOLE OR IN PART WITHOUT THE CONSENT OF NOLA|VANPEURSEM ARCHITECTS

ALABAMA A&M UNIVERSITY

# WELCOME CENTER

4900 MERIDIAN ST.
HUNTSVILLE, ALABAMA

JOB NUMBER
18994

| JRM | JRM | 1/25/2021 |
|---|---|---|
| DRAWN | CHECKED | DATE |

REVISIONS

| No. | Description | Date |
|---|---|---|
| 1 | ADDENDUM#2 | 2/12/21 |
| 2 | ADDENDUM#3 | 3/19/21 |

SHEET TITLE
**FIRST FLOOR PLAN - POWER**

SHEET NUMBER
E-6.1
OF

# KITCHEN EQUIPMENT SCHEDULE

| ITEM NO. | DESCRIPTION OF EQUIPMENT | ELECTRICAL | | | | | | | | | REMARKS |
|---|---|---|---|---|---|---|---|---|---|---|---|
| | | VOLT | PH | KW | AMP | HP | TYPE CONNECTION | TYPE RECEPTACLE/ SAFETY SWITCH | BRANCH CIRCUIT | MOCP | |
| 171 | SCRIPT LOGO LOW PROFILE WITH I BEAM | 120 | 1 | 1.00 | --- | --- | DIRECT | SEE PLANS | R2C#40 | 20/1 | JUNCTION BOX TO BE CONNECTED TO LIGHT SWITCH. CUSTOM SOFFIT MOUNTING. COORDINATE WITH FOOD SERVICE PLANS. |
| 180-1 | ORDER REGISTER | 120 | 1 | --- | 0.7 | --- | CORD/PLUG | 5-20P | R2B#32 | | |
| 180-2 | ORDER REGISTER | 120 | 1 | --- | 0.7 | --- | CORD/PLUG | 5-20P | R2B#32 | | |
| 180-3 | NOT USED | | | | | | | | | 20/1 GFI | |
| 180-4 | ORDER REGISTER | 120 | 1 | --- | 0.7 | --- | CORD/PLUG | 5-20P | R2B#29 | | |
| 180-5 | ORDER REGISTER | 120 | 1 | --- | 0.7 | --- | CORD/PLUG | 5-20P | R2B#32 | | |
| 182-1 | RECEIPT PRINTER | 120 | 1 | 0.04 | 1.8 | --- | CORD/PLUG | 5-20P | R2B#32 | | |
| 182-2 | RECEIPT PRINTER | 120 | 1 | 0.04 | 1.8 | --- | CORD/PLUG | 5-20P | R2B#33 | | |
| 182-3 | RECEIPT PRINTER | 120 | 1 | 0.04 | 1.8 | --- | CORD/PLUG | 5-20P | R2B#33 | | |
| 183-1 | NOT USED | | | | | | | | | 20/1 GFI | |
| 182L-1 | LABEL PRINTER | 120 | 1 | --- | 1.7 | --- | CORD/PLUG | 5-20P | R2B#29 | | |
| 182L-2 | LABEL PRINTER | 120 | 1 | --- | 1.7 | --- | CORD/PLUG | 5-20P | R2B#33 | | |
| 182L-3 | LABEL PRINTER | 120 | 1 | --- | 1.7 | --- | CORD/PLUG | 5-20P | R2B#33 | | |
| 183-1 | ORDER MONITOR | 120 | 1 | 0 | 0.1 | --- | CORD/PLUG | 5-20P | R2B#34 | | |
| 183-2 | NOT USED | | | | | | | | | 20/1 GFI | |
| 183-3 | ORDER MONITOR | 120 | 1 | 0 | 0.1 | --- | CORD/PLUG | 5-20P | R2B#34 | | |
| 183-4 | ORDER MONITOR | 120 | 1 | 0 | 0.1 | --- | CORD/PLUG | 5-20P | R2B#34 | | |
| 183-5 | ORDER MONITOR | 120 | 1 | 0 | 0.1 | --- | CORD/PLUG | 5-20P | R2B#34 | | |
| 183-6 | ORDER MONITOR | 120 | 1 | 0 | 0.1 | --- | CORD/PLUG | 5-20P | R2B#34 | | |
| 211B-1 | FLY SYSTEM | 120 | 1 | 0.078 | 0.65 | --- | CORD/PLUG | 5-15P | R2B#1 | 20/1 GFI | |
| 211B-2 | FLY SYSTEM | 120 | 1 | 0.078 | 0.65 | --- | CORD/PLUG | 5-15P | R2B#2 | 20/1 GFI | |
| 211B-3 | FLY SYSTEM | 120 | 1 | 0.078 | 0.65 | --- | CORD/PLUG | 5-15P | R2B#3 | 20/1 GFI | |
| 260 | 45" VENT HOOD | --- | --- | --- | --- | --- | --- | --- | --- | --- | SEE HVAC EQUIPMENT CONNECTION PLANS FOR FAN ASSOCIATED WITH HOOD |
| 266 | 120" VENT HOOD | --- | --- | --- | --- | --- | --- | --- | --- | --- | SEE HVAC EQUIPMENT CONNECTION PLANS FOR FAN ASSOCIATED WITH HOOD |
| 269 | ANSUL FIRE SUPPRESSION SYSTEM | 120 | 1 | --- | 5 | --- | DIRECT | MOTOR RATED SWITCH | R2B#4 | 20/1 | |
| 270 | ANSUL FIRE SUPPRESSION SYSTEM | 120 | 1 | --- | 5 | --- | DIRECT | MOTOR RATED SWITCH | R2B#5 | 20/1 | |
| 300a | MILKSHAKE BASE DISPENSER | 120 | 1 | --- | 4 | --- | CORD/PLUG | 5-20P | R2B#6 | 20/1 GFI | |
| 300c-1 | SINGLE-SPINDLE MIXER | 208 | 2 | --- | 1 | --- | DIRECT | 30/2/4XSS | R2B#8,9 | 15/2 | |
| 300c-2 | SINGLE-SPINDLE MIXER | 208 | 2 | --- | 1 | --- | DIRECT | 30/2/4XSS | R2B#10,11 | 15/2 | |
| 300X | DOUBLE BARREL ICE CREAM MACHINE | 208 | 3 | --- | 19 | 1.5 | CORD/PLUG | 15-30P | R2B#12,13,14 | 30/3 | |
| 300Y-2 | NOT USED | | | | | | | | | | |
| 305 | TEA BREWER | 120 | 1 | 1.65 | 13.8 | --- | CORD/PLUG | 5-15P | R2B#18 | 20/1 GFI | |
| 308 | SINGLE COFFEE MAKER | 208 | 1 | 4 | 19.2 | --- | CORD/PLUG | L14-30P | R2B#19,20 | 30/2 | |
| 309 | SINGLE LEMONADE BUBBLER | 120 | 1 | --- | 3.6 | 0.1 | CORD/PLUG | 5-15P | R2B#21 | 20/1 GFI | |
| 310 | DOUBLE LEMONADE BUBBLER | 120 | 1 | --- | 8.5 | --- | CORD/PLUG | 5-15P | R2B#22 | 20/1 GFI | |
| 315-1 | 8-HEAD BEVERAGE DISPENSER WITH ICE BIN | 120 | 1 | --- | 10 | --- | CORD/PLUG | 5-15P | R2B#23 | 20/1 GFI | TOTAL OF 2 ITEM 315 UNITS - EACH UNIT EQUIPED WITH 2 CORD AND PLUGS |
| | 8-HEAD BEVERAGE DISPENSER WITH ICE BIN | 120 | 1 | --- | 10 | --- | CORD/PLUG | 5-15P | R2B#24 | 20/1 GFI | TOTAL OF 2 ITEM 315 UNITS - EACH UNIT EQUIPED WITH 2 CORD AND PLUGS |
| 315-2 | 8-HEAD BEVERAGE DISPENSER WITH ICE BIN | 120 | 1 | --- | 10 | --- | CORD/PLUG | 5-15P | R2B#25 | 20/1 GFI | TOTAL OF 2 ITEM 315 UNITS - EACH UNIT EQUIPED WITH 2 CORD AND PLUGS |
| | 8-HEAD BEVERAGE DISPENSER WITH ICE BIN | 120 | 1 | --- | 10 | --- | CORD/PLUG | 5-15P | R2B#26 | 20/1 GFI | TOTAL OF 2 ITEM 315 UNITS - EACH UNIT EQUIPED WITH 2 CORD AND PLUGS |
| 320-1 | TURBO CARBONATOR | 115 | 1 | 0.7 | 6.2 | --- | CORD/PLUG | 5-20P | R2B#27 | 20/1 GFI | |
| 320-2 | TURBO CARBONATOR | 115 | 1 | 0.7 | 6.2 | --- | CORD/PLUG | 5-20P | R2B#28 | 20/1 GFI | |
| 380A | SELF-CONTAINED AIR-COOLED ICE MACHINE | 208 | 1 | --- | 14 | --- | CORD/PLUG | 6-20P | R2B#29,30 | 20/2 | |
| 380a | ICE BIN SANITATION SYSTEM | 120 | 1 | 0.0096 | --- | --- | CORD/PLUG | 5-15P | R2B#29,30 | 20/1 GFI | |
| 380B | SELF-CONTAINED AIR-COOLED ICE MACHINE | 208 | 1 | --- | 14 | --- | CORD/PLUG | 6-20P | R2C#1,2 | 20/2 | |
| 400 | REACH-IN FREEZER (30" WIDE) | 120 | 1 | 1.1 | 9.4 | 0.5 | CORD/PLUG | 5-15P | R2C#3 | 20/1 GFI | |
| 410 | WALK-IN FREEZER | 120 | 1 | --- | 12.5 | --- | DIRECT | MOTOR RATED SWITCH | R2C#4 | 20/1 | |
| 410a | WALK-IN FREEZER CONDENSER | 208 | 3 | --- | 14.6 | --- | DIRECT | 30/3/4XSS | R2C#5,6,7 | 20/3 | |
| 410b | WALK-IN FREEZER EVAPORATOR | 208 | 1 | --- | 1.5 | --- | DIRECT | 30/2/4XSS | R2C#8,9 | 20/2 | |
| 420-1 | SINGLE UNDERCOUNTER REFRIGERATOR | 120 | 1 | 0.564 | 4.7 | 0.2 | CORD/PLUG | 5-20P | R2C#10 | 20/1 GFI | |
| 420-2 | SINGLE UNDERCOUNTER REFRIGERATOR | 120 | 1 | 0.564 | 4.7 | 0.2 | CORD/PLUG | 5-20P | R2C#11 | 20/1 GFI | |
| 421-1 | DOUBLE UNDERCOUNTER REFRIGERATOR | 120 | 1 | 0.756 | 6.3 | 0.2 | CORD/PLUG | 5-15P | R2C#12 | 20/1 GFI | |
| 421-2 | DOUBLE UNDERCOUNTER REFRIGERATOR | 120 | 1 | 0.756 | 6.3 | 0.2 | CORD/PLUG | 5-15P | R2C#13 | 20/1 GFI | |
| 422 | REFRIGERATED EQUIPMENT STAND (48") | 120 | 1 | 0.8 | 6.7 | 0.33 | CORD/PLUG | 5-15P | R2C#14 | 20/1 GFI | |
| 432 | DOUBLE REFRIGERATED WORK TABLE | 120 | 1 | 0.756 | 6.3 | 0.2 | CORD/PLUG | 5-20P | R2C#15 | 20/1 GFI | |
| 439 | 40" COLD RAIL | 120 | 1 | 0.8 | 7.1 | 4-Jan | CORD/PLUG | 5-15P | R2C#16 | 20/1 GFI | |
| 440 | BREADING TABLE | 120 | 1 | --- | 12 | 0.5 | CORD/PLUG | 5-20P | R2C#17 | 20/1 GFI | |
| 441A | REFRIGERATED PREP TABLE | 120 | 1 | --- | 9 | 2-Jan | CORD/PLUG | 5-15P | R2C#18 | 20/1 GFI | |
| 444 | THAWING CABINET - DOUBLE | 120 | 1 | --- | 16 | 0.5 | CORD/PLUG | 5-20P | R2C#19 | 20/1 GFI | |
| 449 | WALK-IN COOLER | 120 | 1 | --- | 12.5 | --- | DIRECT | MOTOR RATED SWITCH | R2C#22 | 20/1 | |
| 449a | WALK-IN COOLER CONDENSER | 208 | 3 | --- | 5.8 | --- | DIRECT | 30/3/NEMA3R | R2C#23,24,25 | 20/3 | |
| 449b | WALK-IN COOLER EVAPORATOR | 208 | 1 | --- | 1 | --- | DIRECT | 30/2/NEMA3R | R2C#20,21 | 20/2 | |
| 500A | VERTICAL CONTACT TOASTER | 120 | 1 | 1.8 | 15 | --- | CORD/PLUG | 5-15P | R2C#26 | 20/1 GFI | |
| 503 | NOT USED | | | | | | | | | | |
| 505V | VECTOR OVEN | 208 | 3 | 7.9 | 22 | --- | CORD/PLUG | 15-30P | R2C#29,30,31 | 30/3 | |
| 522L-1 | SINGLE OPEN FRYER | 208 | 3 | 22 | 61 | --- | DIRECT | 100/3/4XSS | R2D#1,2,3 | 80/3 ST | CONNECT S.T. BREAKER TO ANSUL SYSTEM AS REQUIRED SUCH THAT BREAKER IS SHUNTED UPON ACTIVATION OF ANSUL SYSTEM |
| 522L-2 | SINGLE OPEN FRYER | 208 | 3 | 22 | 61 | --- | DIRECT | 100/3/4XSS | R2D#4,5,6 | 80/3 ST | CONNECT S.T. BREAKER TO ANSUL SYSTEM AS REQUIRED SUCH THAT BREAKER IS SHUNTED UPON ACTIVATION OF ANSUL SYSTEM |
| 523-1 | PRESSURE FRYER | 208 | 3 | 13.5 | 38 | --- | CORD/PLUG | 15-50P | R2D#7,8,9 | 50/3 ST | CONNECT S.T. BREAKER TO ANSUL SYSTEM AS REQUIRED SUCH THAT BREAKER IS SHUNTED UPON ACTIVATION OF ANSUL SYSTEM |
| 523-2 | PRESSURE FRYER | 208 | 3 | 13.5 | 38 | --- | CORD/PLUG | 15-50P | R2D#10,11,12 | 50/3 ST | CONNECT S.T. BREAKER TO ANSUL SYSTEM AS REQUIRED SUCH THAT BREAKER IS SHUNTED UPON ACTIVATION OF ANSUL SYSTEM |
| 523-3 | PRESSURE FRYER | 208 | 3 | 13.5 | 38 | --- | CORD/PLUG | 15-50P | R2D#13,14,15 | 50/3 ST | CONNECT S.T. BREAKER TO ANSUL SYSTEM AS REQUIRED SUCH THAT BREAKER IS SHUNTED UPON ACTIVATION OF ANSUL SYSTEM |
| 524 | DUAL SIDE CLAMSHELL GRILL | 208 | 3 | 3.3 | 24.1/28.2 /23.1 | --- | CORD/PLUG | 15-50P | R2D#16,17,18 | 50/3 ST | CONNECT S.T. BREAKER TO ANSUL SYSTEM AS REQUIRED SUCH THAT BREAKER IS SHUNTED UPON ACTIVATION OF ANSUL SYSTEM |
| 550 | DOUBLE WARMING DRAWER | 120 | 1 | 0.9 | 7.83 | --- | CORD/PLUG | 5-15P | R2D#19 | 20/1 GFI | |
| 560 | FRY HOLDING STATION | 120 | 1 | 1.9 | 15.4 | --- | CORD/PLUG | 5-20P | R2D#20 | 20/1 GFI | |
| 562A-1 | HIGH DENSITY HOT HOLDING TOWER | 120 | 1 | 1.8 | 16 | --- | CORD/PLUG | 5-20P | R2D#21 | 20/1 GFI | |
| 562A-2 | HIGH DENSITY HOT HOLDING TOWER | 120 | 1 | 1.8 | 16 | --- | CORD/PLUG | 5-20P | R2D#22 | 20/1 GFI | |
| 563D | DOUBLE TIER SANDWICH SLIDE | 208 | 1 | 1.73 | 9.18 | --- | CORD/PLUG | L14-20P | R2D#23,24 | 20/2 | |
| 564A-1 | VISUAL HOT HOLDING CABINET (2x2) | 120 | 1 | 0.66 | 5.5 | --- | CORD/PLUG | 5-15P | R2D#25 | 20/1 GFI | |
| 564A-2 | VISUAL HOT HOLDING CABINET (2x2) | 120 | 1 | 0.66 | 5.5 | --- | CORD/PLUG | 5-15P | R2D#26 | 20/1 GFI | |
| 580H | VISUAL HOT HOLDING CABINET (5x2) | 120 | 1 | 1.92 | 16 | --- | CORD/PLUG | L5-20P | R2D#27 | 20/1 GFI | |
| 600 | MIXER | 120 | 1 | --- | 8 | 0.5 | CORD/PLUG | L5-20P | R2D#28 | 20/1 GFI | |
| 607 | COUNTER TOP LEMON JUICER | 115 | 1 | --- | --- | 0.25 | CORD/PLUG | 5-15P | R2D#29 | 20/1 GFI | |
| 669 | OFFICE SAFE | 120 | 1 | --- | --- | --- | CORD/PLUG | 5-20P | R2D#30 | 20/1 GFI | |
| 672-1 | MENU BOARD | 120 | 1 | --- | --- | --- | CORD/PLUG | 5-20P | R2D#31 | 20/1 GFI | |
| 672-2 | MENU BOARD | 120 | 1 | --- | --- | --- | CORD/PLUG | 5-20P | R2D#32 | 20/1 GFI | |
| 672-3 | MENU BOARD | 120 | 1 | --- | --- | --- | CORD/PLUG | 5-20P | R2D#33 | 20/1 GFI | |
| 672-4 | MENU BOARD | 120 | 1 | --- | --- | --- | CORD/PLUG | 5-20P | R2D#34 | 20/1 GFI | |
| F182L - 1 | LABEL PRINTER | 120 | 1 | --- | 1.7A | --- | CORD/PLUG | 5-20R | R2D#35 | 20/1 GFI | |
| F182L - 2 | LABEL PRINTER | 120 | 1 | --- | 1.7A | --- | CORD/PLUG | 5-20R | R2D#36 | 20/1 GFI | |
| F183 - 1 | ORDER MONITOR | 120 | 1 | --- | 0.1A | --- | CORD/PLUG | 5-20R | R2D#37 | 20/1 GFI | |
| F183 - 2 | ORDER MONITOR | 120 | 1 | --- | 0.1A | --- | CORD/PLUG | 5-20R | R2D#38 | 20/1 GFI | |
| F315 | 8 HEAD BEVERAGE TOWER | 120 | 1 | --- | 10A | --- | CORD/PLUG | 5-20R | R2D#39 | 20/1 GFI | |
| F444S | FUTURE THAWING CABINET-SINGLE-RT HAND | 120 | 1 | --- | 16A | --- | DIRECT | MOTOR RATED SWITCH | R2D#40 | 20/1 GFI | |
| F503 | EGG STATION | 208 | 1 | 2.5KW | 12.5A | --- | CORD/PLUG | 6-20R | R2C#32,33 | 20/2 | |
| F523 | PRESSURE FRYER | 208 | 3 | 13.5KW | 38A | --- | CORD/PLUG | 15-50R | R2C#33,34,35 | 50/3 ST | CONNECT S.T. BREAKER TO ANSUL SYSTEM AS REQUIRED SUCH THAT BREAKER IS SHUNTED UPON ACTIVATION OF ANSUL SYSTEM |
| F524 | DUAL SIDE CLAMSHELL GRILL | 208 | 3 | 3.3KW | 28A | --- | CORD/PLUG | 15-50R | R2C#36,37,38 | 50/3 ST | CONNECT S.T. BREAKER TO ANSUL SYSTEM AS REQUIRED SUCH THAT BREAKER IS SHUNTED UPON ACTIVATION OF ANSUL SYSTEM |

**KITCHEN EQUIPMENT GENERAL NOTES:**

A. INFORMATION SHOWN ON KITCHEN PLAN IS TO BE USED FOR BIDDING PURPOSES ONLY. ACTUAL ROUGH-IN INFORMATION SHALL BE OBTAINED FROM APPROVED KITCHEN EQUIPMENT SHOP DRAWINGS. ELECTRICAL CONTRACTOR SHALL BE RESPONSIBLE FOR PROVIDING ADDITIONAL WIRING SHOWN OR REQUIRED BY KITCHEN EQUIPMENT CONTRACT DRAWINGS. REFER TO "K" SHEETS FOR EXACT LOCATIONS AND HEIGHTS.

B. EQUIPMENT CONNECTION REQUIREMENTS SHALL BE OBTAINED FROM APPROVED KITCHEN EQUIPMENT SUBMITTAL DATA AND THE MANUFACTURER'S RECOMMENDED METHOD AND LOCATION FOR EACH CONNECTION SHALL BE USED. REFER TO "K" SHEETS FOR EXACT LOCATIONS AND HEIGHTS.

C. ALL CONNECTIONS SHALL PERMIT MOVEMENT OF EQUIPMENT FOR MAINTENANCE AND CLEANING WITHOUT DISCONNECTION.

D. ALL FLOOR CONNECTIONS SHALL BE COMPLETELY WATERPROOFED AND OF A CONFIGURATION TO PERMIT EQUIPMENT TO BE MOVED INTO PLACE WITHOUT LIFTING.

E. EQUIPMENT SERVED FROM A RECEPTACLE SHALL BE 'SO' TYPE NEOPRENE CORD CONNECTION OF SAME SIZE BRANCH CIRCUIT WITH GREEN GROUND AND MATCHING HEAVY DUTY RUBBER CORD GRIP PLUG. BOND GROUND CONDUCTOR TO EQUIPMENT CHASSIS.

F. ALL FLEXIBLE CONDUIT SHALL BE LIQUID TIGHT WITH PROPER LIQUID TIGHT FITTINGS.

G. HEAVY DUTY DISCONNECT SWITCHES WITH GROUND LUGS SHALL BE PROVIDED FOR EACH DIRECT CONNECTED PIECE OF EQUIPMENT. SWITCHES SHALL BE NEMA 4X STAINLESS STEEL.

H. THE E.C. SHALL OBTAIN THE EXACT MOUNTING HEIGHT AND LOCATION FOR EACH PIECE OF EQUIPMENT FROM APPROVED KITCHEN EQUIPMENT SUBMITTALS. E.C. SHALL COMPLETE MOUNTING HEIGHT COLUMN FOR AS-BUILT RECORDS. REFER TO "K" SHEETS FOR EXACT LOCATIONS AND HEIGHTS.

I. ALL RECEPTACLES LOCATED IN THE KITCHEN AND SERVING AREA SHALL HAVE THE PANEL NAME AND CIRCUIT NUMBER ENGRAVED ON THE FACEPLATES.

J. ALL DISCONNECT SWITCHES THIS PROJECT TO BE FUSED AS DIRECTED BY MANUFACTURERS SPECIFICATIONS (FAD).

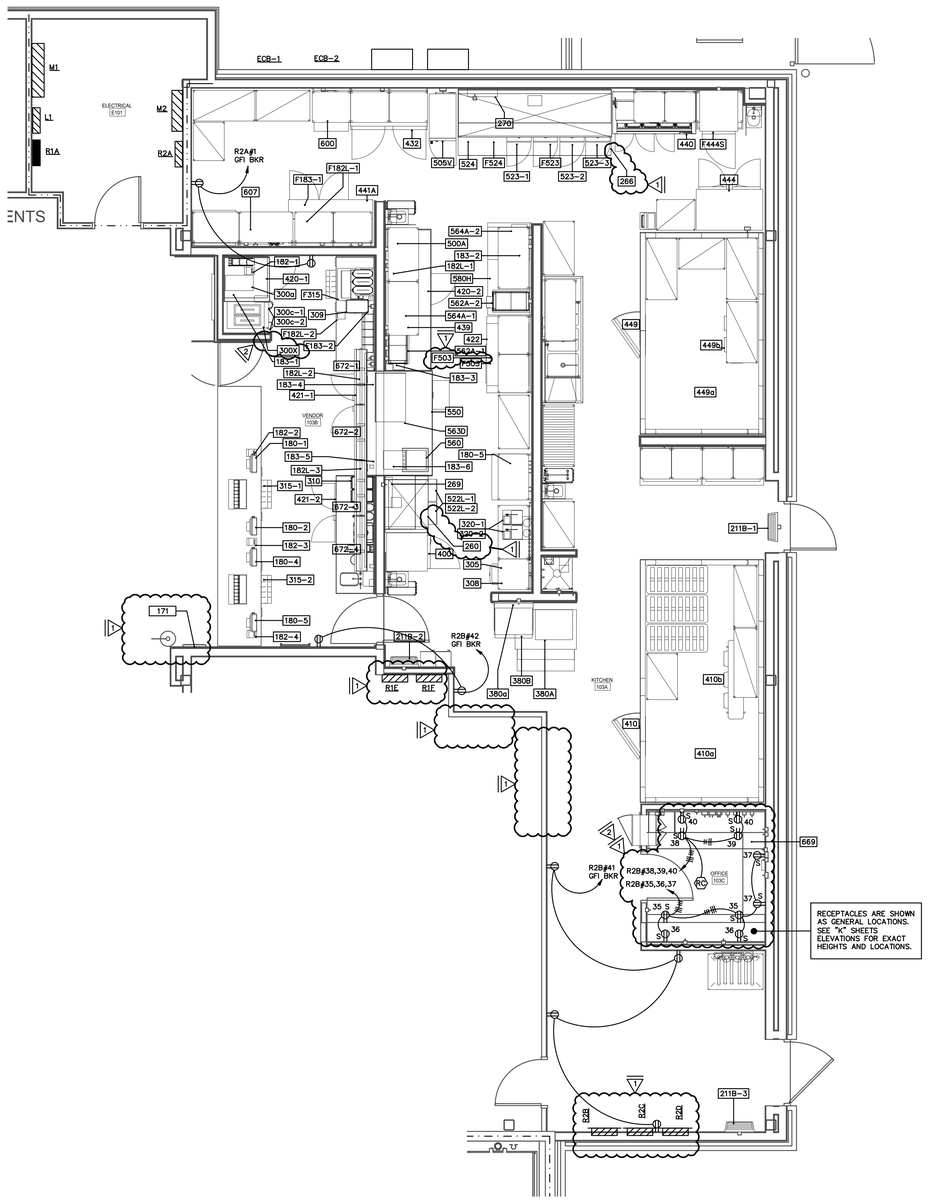


## FIRST FLOOR PLAN - ENLARGED KITCHEN PLAN

SCALE: 1/4" = 1'-0"

EE Group Inc.
gadsden
TEL: (256)413-7717
FAX: (256)413-7769
WEB: WWW.EEGRPINC.COM
Job No. 4643
Plot Date: Mar 17, 2021 5:11:48 pm

ALABAMA REGISTERED No. 21242 PROFESSIONAL ENGINEER JOHN R. MORGAN 3/19/21

NOLA VANPEURSEM ARCHITECTS, PC
MEMBER OF THE AMERICAN INSTITUTE OF ARCHITECTS
301 JEFFERSON STREET
HUNTSVILLE, ALABAMA 35801
(256) 532-6617
NVPARCHITECTS.COM

THIS DRAWING MAY NOT BE REPRODUCED IN WHOLE OR IN PART WITHOUT THE CONSENT OF NOLA|VANPEURSEM ARCHITECTS

ALABAMA A&M UNIVERSITY
# WELCOME CENTER
4900 MERIDIAN ST.
HUNTSVILLE, ALABAMA

JOB NUMBER
18994

JRM / JRM / 1/25/2021
DRAWN - CHECKED - DATE

REVISIONS

| No. | Description | Date |
|---|---|---|
| 1 | ADDENDUM#2 | 2/12/21 |
| 2 | ADDENDUM#3 | 3/19/21 |

SHEET TITLE
**FIRST FLOOR PLAN - ENLARGED KITCHEN**

SHEET NUMBER
E-6.2
OF

EE Group Inc.
gadsden
TEL: (256)413-7717
FAX: (256)413-7789
WEB: WWW.EEGRPINC.COM

Job No. 4643

Plot Date: Mar 17, 2021 5:09:57 pm

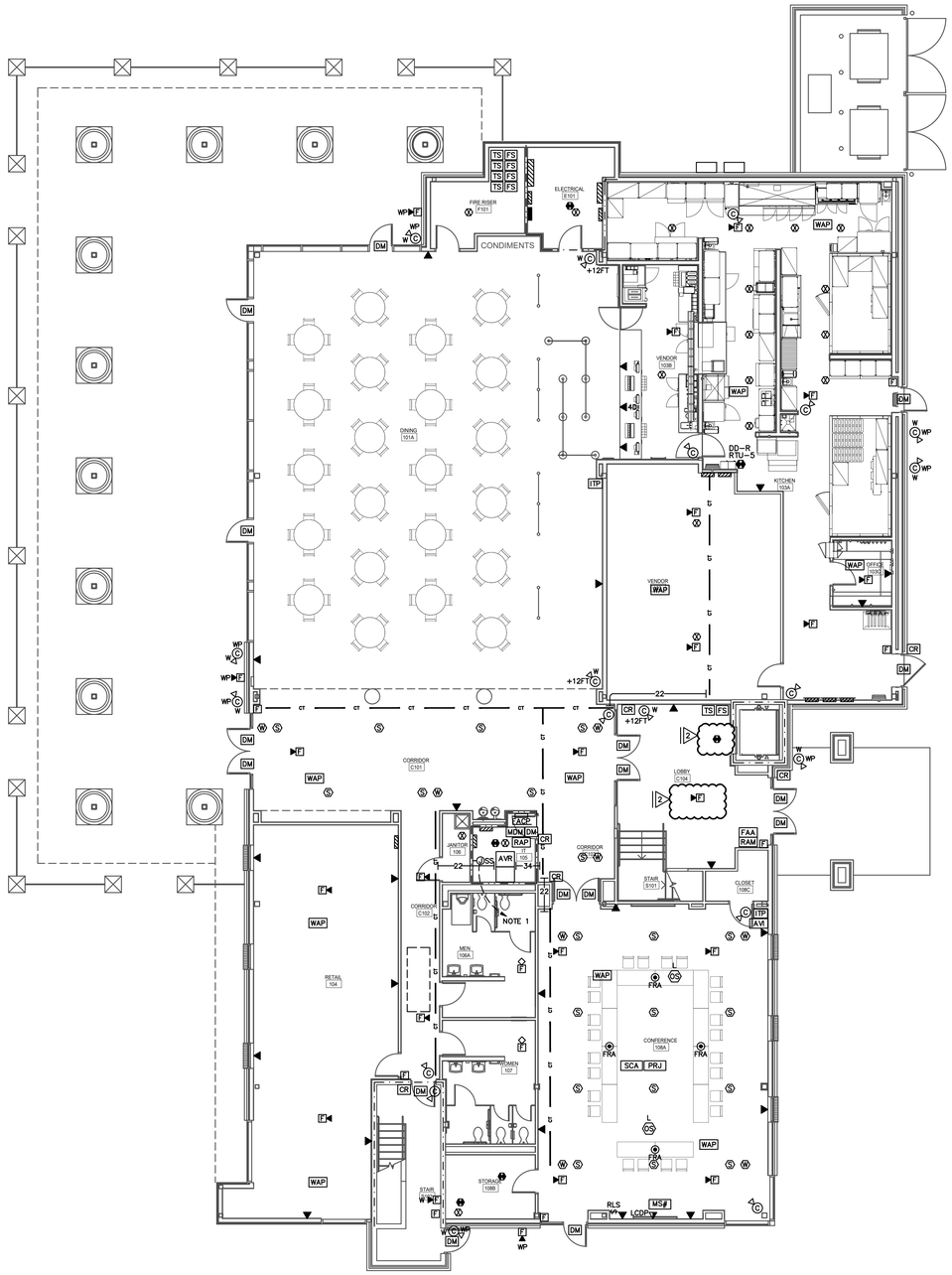


# FIRST FLOOR PLAN - AUXILIARY

SCALE: 1/8" = 1'-0"

NOTES THIS SHEET:

1. TO FACP FOR SOUND SYSTEM CAPTURE SEE F.A. SYSTEM RISER

NOLA VANPEURSEM
ARCHITECTS, PC
MEMBER OF THE AMERICAN INSTITUTE OF ARCHITECTS
301 JEFFERSON STREET
HUNTSVILLE, ALABAMA 35801
(256) 532-6617
NVPARCHITECTS.COM

THIS DRAWING MAY NOT BE REPRODUCED IN WHOLE OR IN PART WITHOUT THE CONSENT OF NOLA|VANPEURSEM ARCHITECTS

ALABAMA A&M UNIVERSITY

# WELCOME CENTER

4900 MERIDIAN ST.
HUNTSVILLE, ALABAMA

JOB NUMBER
18994

JRM / JRM / 1/25/2021
DRAWN - CHECKED - DATE

REVISIONS

| No. | Description | Date |
|---|---|---|
| 1 | ADDENDUM#2 | 2/12/21 |
| 2 | ADDENDUM#3 | 3/19/21 |

SHEET TITLE
**FIRST FLOOR PLAN - AUXILIARY**

SHEET NUMBER
E-6.3
OF

EE Group Inc.
gadsden
TEL: (256)413-7717
FAX: (256)413-7789
WEB: WWW.EEGRPINC.COM

Job No. 4643

Plot Date: Mar 17, 2021 5:08:41 pm

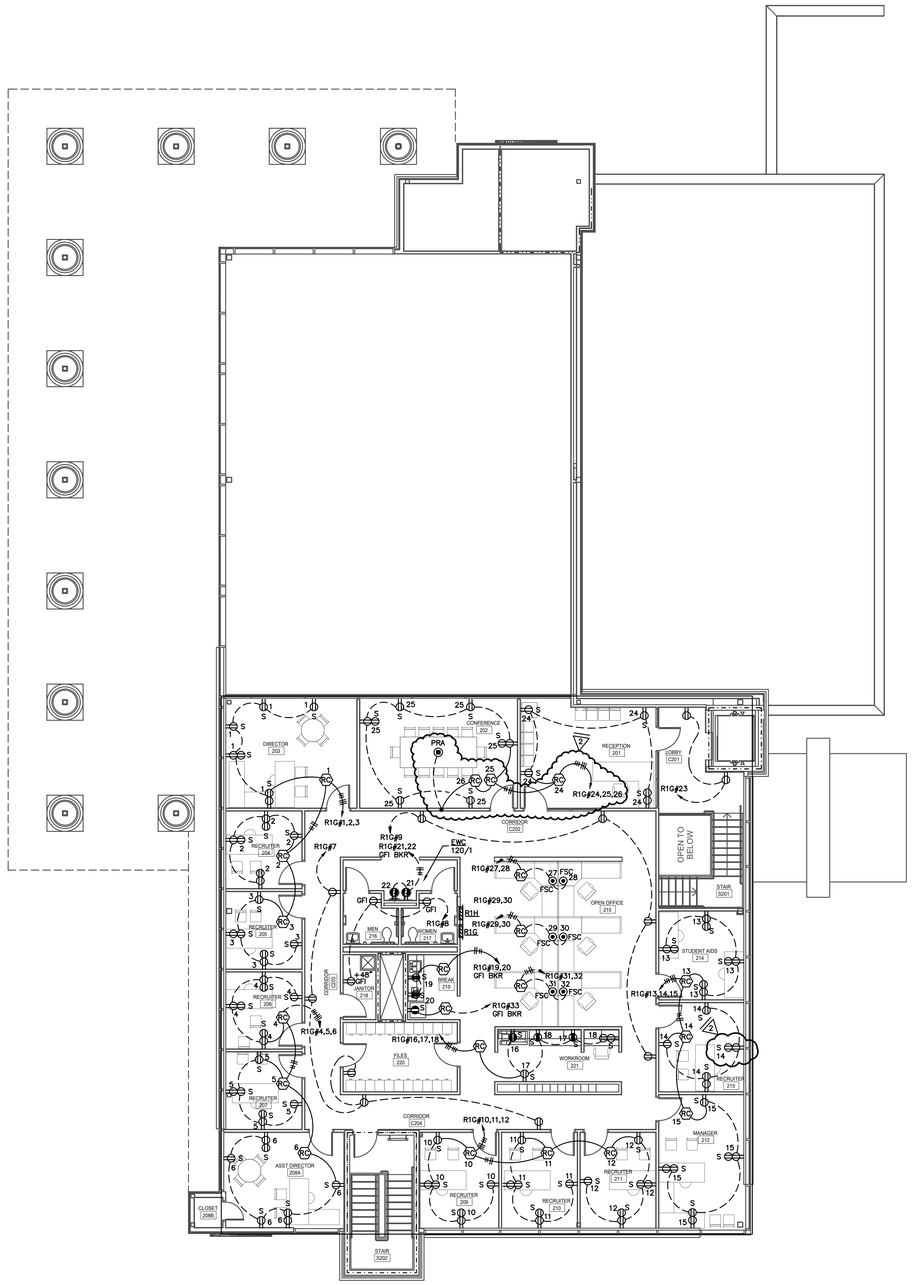


## SECOND FLOOR PLAN - POWER

SCALE: 1/8" = 1'-0"

ALABAMA
REGISTERED
No. 21242
PROFESSIONAL ENGINEER
JACK R. MORGAN
3/19/21

NOLA VANPEURSEM
ARCHITECTS, PC
MEMBER OF THE AMERICAN INSTITUTE OF ARCHITECTS
301 JEFFERSON STREET
HUNTSVILLE, ALABAMA 35801
(256) 533-6617
NVPARCHITECTS.COM

THIS DRAWING MAY NOT BE REPRODUCED IN WHOLE OR IN PART WITHOUT THE CONSENT OF NOLA|VANPEURSEM ARCHITECTS

ALABAMA A&M UNIVERSITY

# WELCOME CENTER

4900 MERIDIAN ST
HUNTSVILLE, ALABAMA

JOB NUMBER
18994

JRM / JRM / 1/25/2021
DRAWN - CHECKED - DATE

REVISIONS

| No. | Description | Date |
|---|---|---|
| 1 | ADDENDUM#2 | 2/12/21 |
| 2 | ADDENDUM#3 | 3/19/21 |

SHEET TITLE
**SECOND FLOOR PLAN - POWER**

SHEET NUMBER
E-7.1
OF

EE Group Inc.
gadsden
TEL: (256)413-7717
FAX: (256)413-7789
WEB: WWW.EEGRPINC.COM

Job No. 4643
Plot Date: Mar 17, 2021 5:08:13 pm

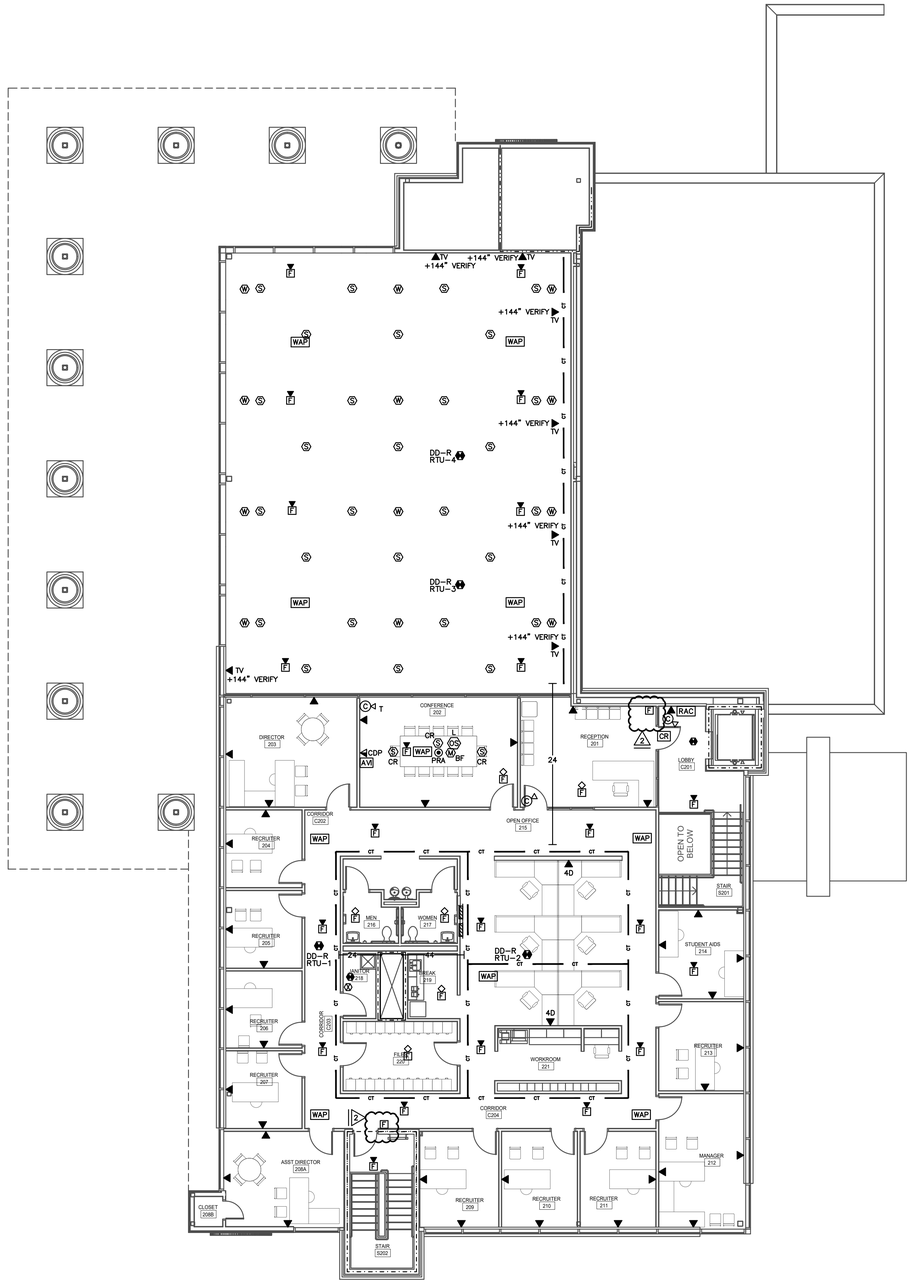


## SECOND FLOOR PLAN - AUXILIARY

SCALE: 1/8" = 1'-0"

NOLA VANPEURSEM
ARCHITECTS, PC
MEMBER OF THE AMERICAN INSTITUTE OF ARCHITECTS
301 JEFFERSON STREET
HUNTSVILLE, ALABAMA 35801
(256) 532-6617
NVPARCHITECTS.COM

THIS DRAWING MAY NOT BE REPRODUCED IN WHOLE OR IN PART WITHOUT THE CONSENT OF NOLA|VANPEURSEM ARCHITECTS

ALABAMA A&M UNIVERSITY

# WELCOME CENTER

4900 MERIDIAN ST
HUNTSVILLE, ALABAMA

JOB NUMBER
18994

JRM / JRM / 1/25/2021
DRAWN - CHECKED - DATE

REVISIONS

| No. | Description | Date |
|---|---|---|
| 1 | ADDENDUM#2 | 2/12/21 |
| 2 | ADDENDUM#3 | 3/19/21 |

SHEET TITLE
**SECOND FLOOR PLAN - AUXILIARY**

SHEET NUMBER
E-7.2
OF

EE Group Inc.
gadsden
TEL: (256)413-7717
FAX: (256)413-7789
WEB: WWW.EEGRPINC.COM

Job No. 4643

Plot Date: Mar 17, 2021 5:07:48 pm

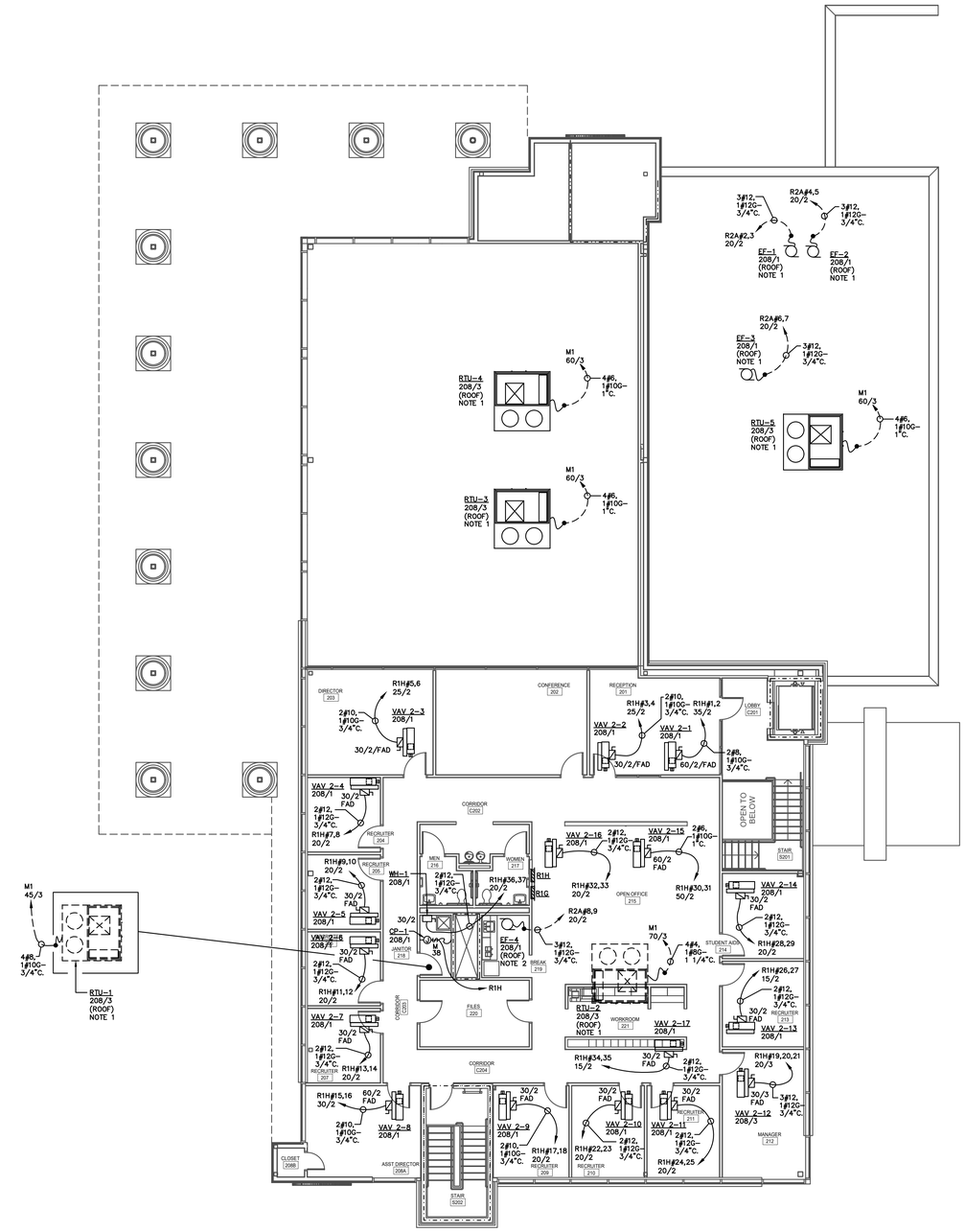


## SECOND FLOOR PLAN - HVAC EQUIPMENT CONNECTIONS

SCALE: 1/8" = 1'-0"

NOTES THIS SHEET:

1. UNIT FURNISHED WITH INTEGRAL SAFETY SWITCH AND POWERED GFCI CONVENIENCE OUTLET.
2. UNIT FURNISHED WITH INTEGRAL SAFETY SWITCH.

ALABAMA
REGISTERED
No. 21242
3/19/21
PROFESSIONAL ENGINEER
JACK R. MORGAN

NOLA VANPEURSEM
ARCHITECTS, PC
MEMBER OF THE AMERICAN INSTITUTE OF ARCHITECTS
301 JEFFERSON STREET
HUNTSVILLE, ALABAMA 35801
(256) 532-6617
NVPARCHITECTS.COM

THIS DRAWING MAY NOT BE REPRODUCED IN WHOLE OR IN PART WITHOUT THE CONSENT OF NOLA|VANPEURSEM ARCHITECTS

ALABAMA A&M UNIVERSITY

# WELCOME CENTER

4900 MERIDIAN ST
HUNTSVILLE, ALABAMA

JOB NUMBER
18994

JRM / JRM / 1/25/2021
DRAWN - CHECKED - DATE

REVISIONS

| No. | Description | Date |
|---|---|---|
| 1 | ADDENDUM#2 | 2/12/21 |
| 2 | ADDENDUM#3 | 3/19/21 |

SHEET TITLE
**SECOND FLOOR PLAN - HVAC EQUIPMENT CONNECTIONS**

SHEET NUMBER
E-7.3
OF